Wood Trick®
Wood Trick
MONEY BOX

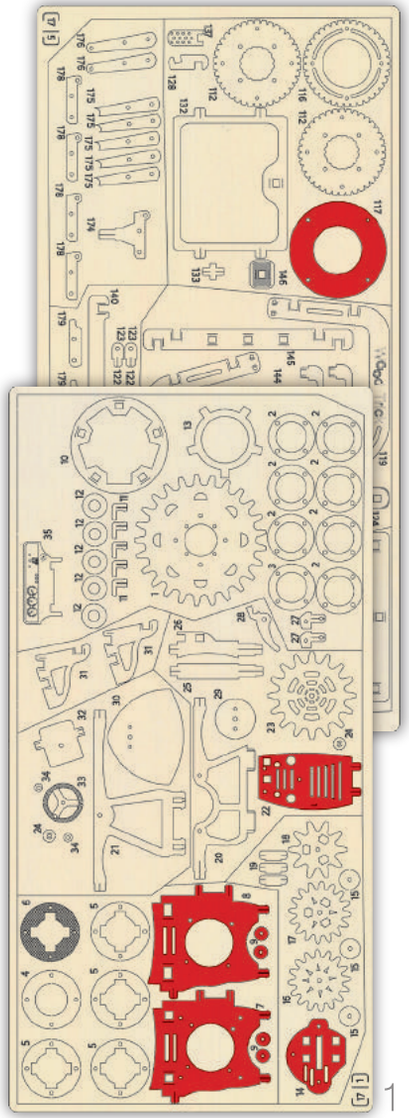
5
1

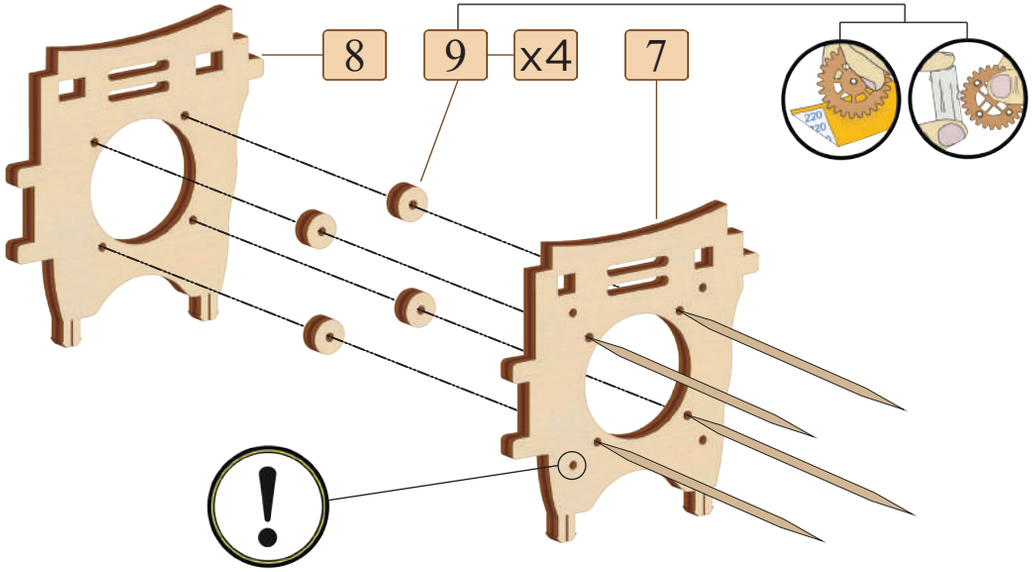
8
9
x4
7
!

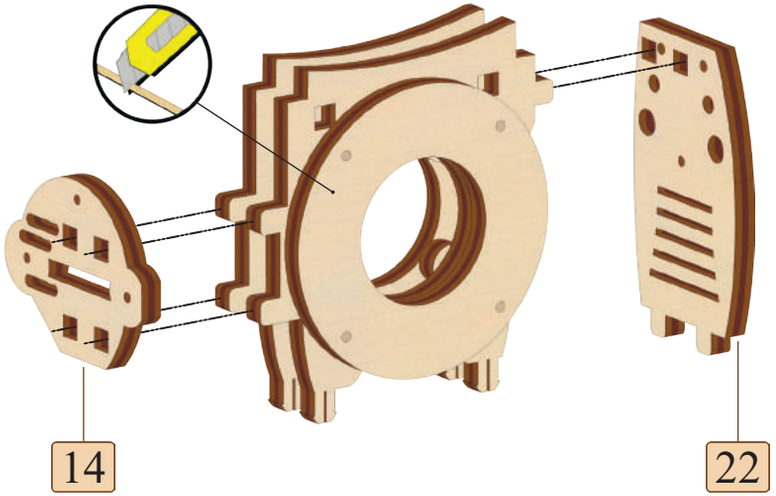
14
22

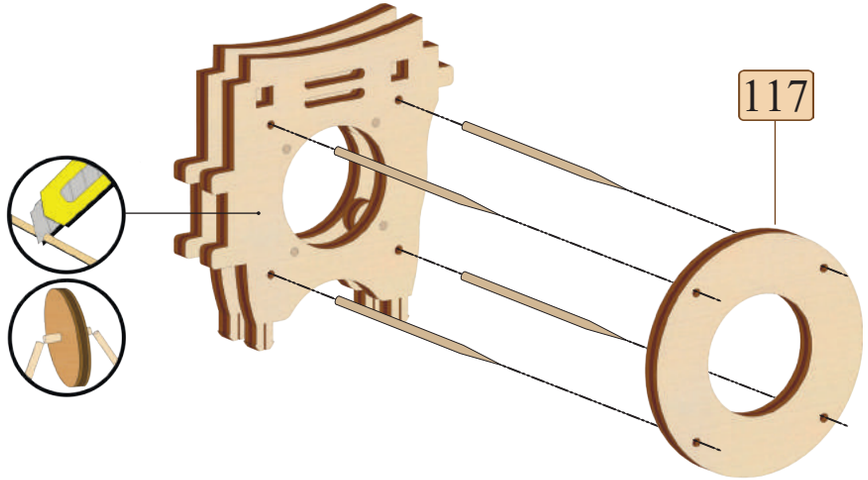
117

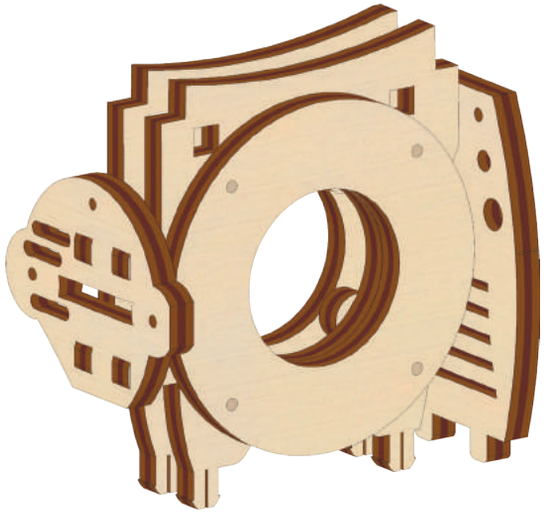

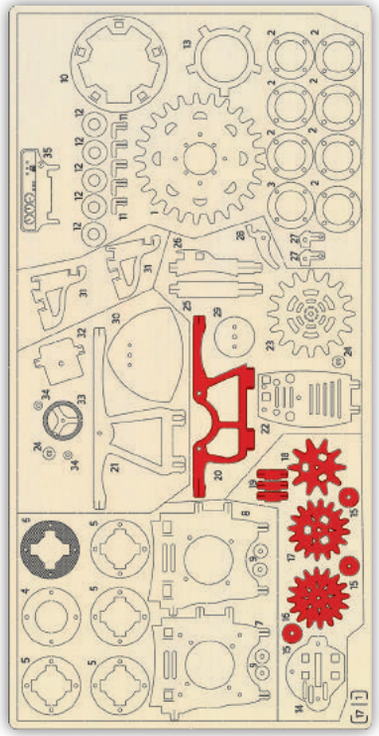

1

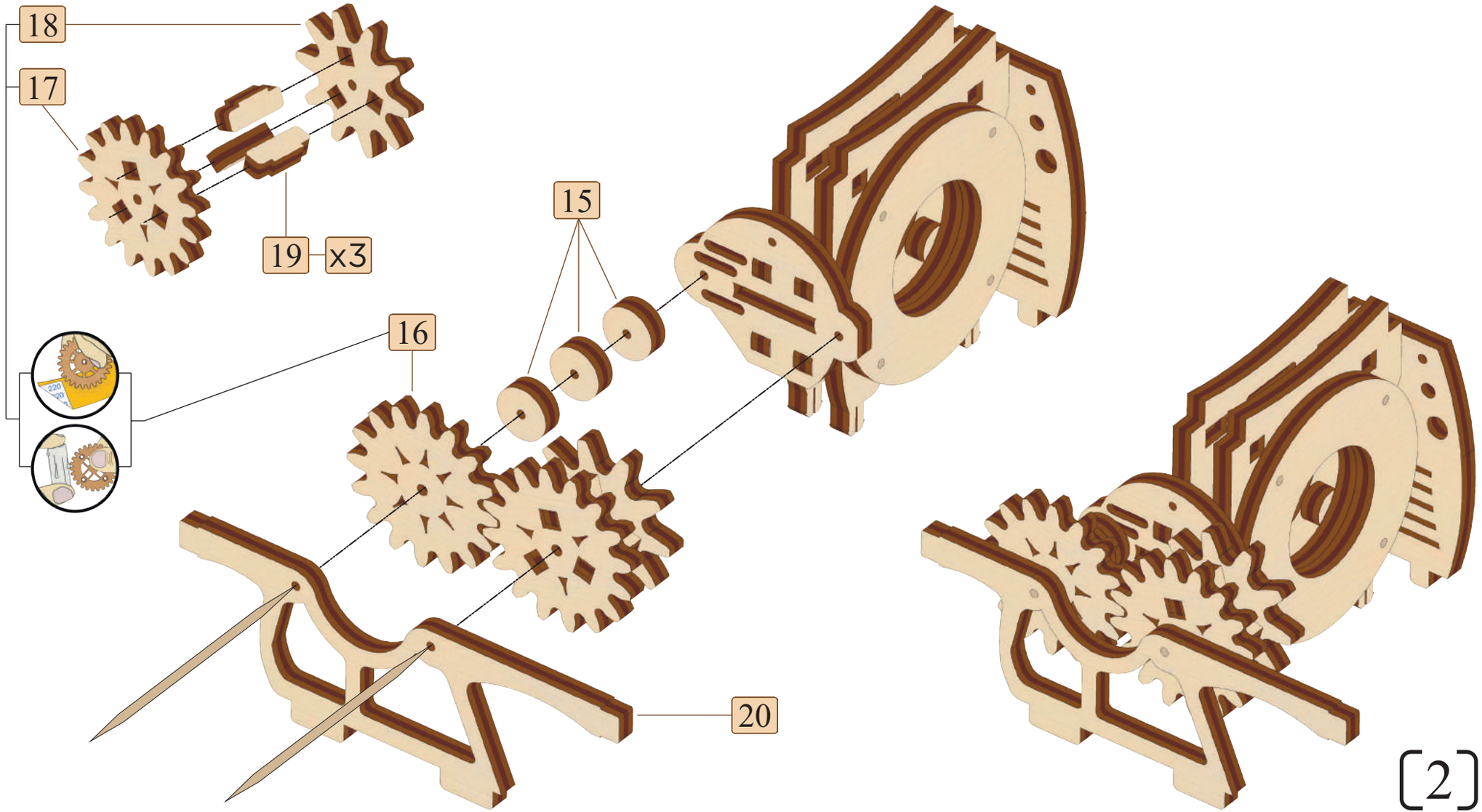

[2]

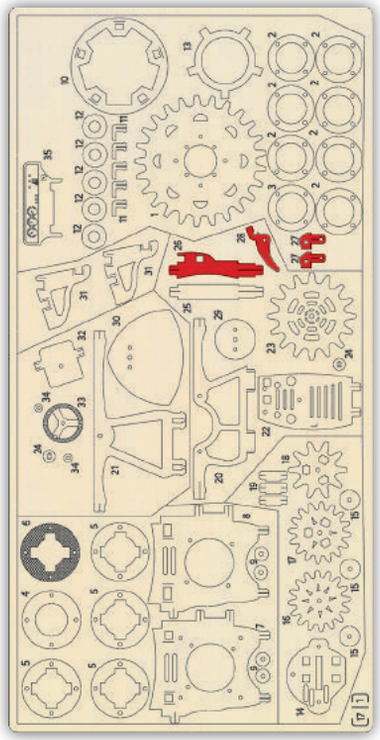

1

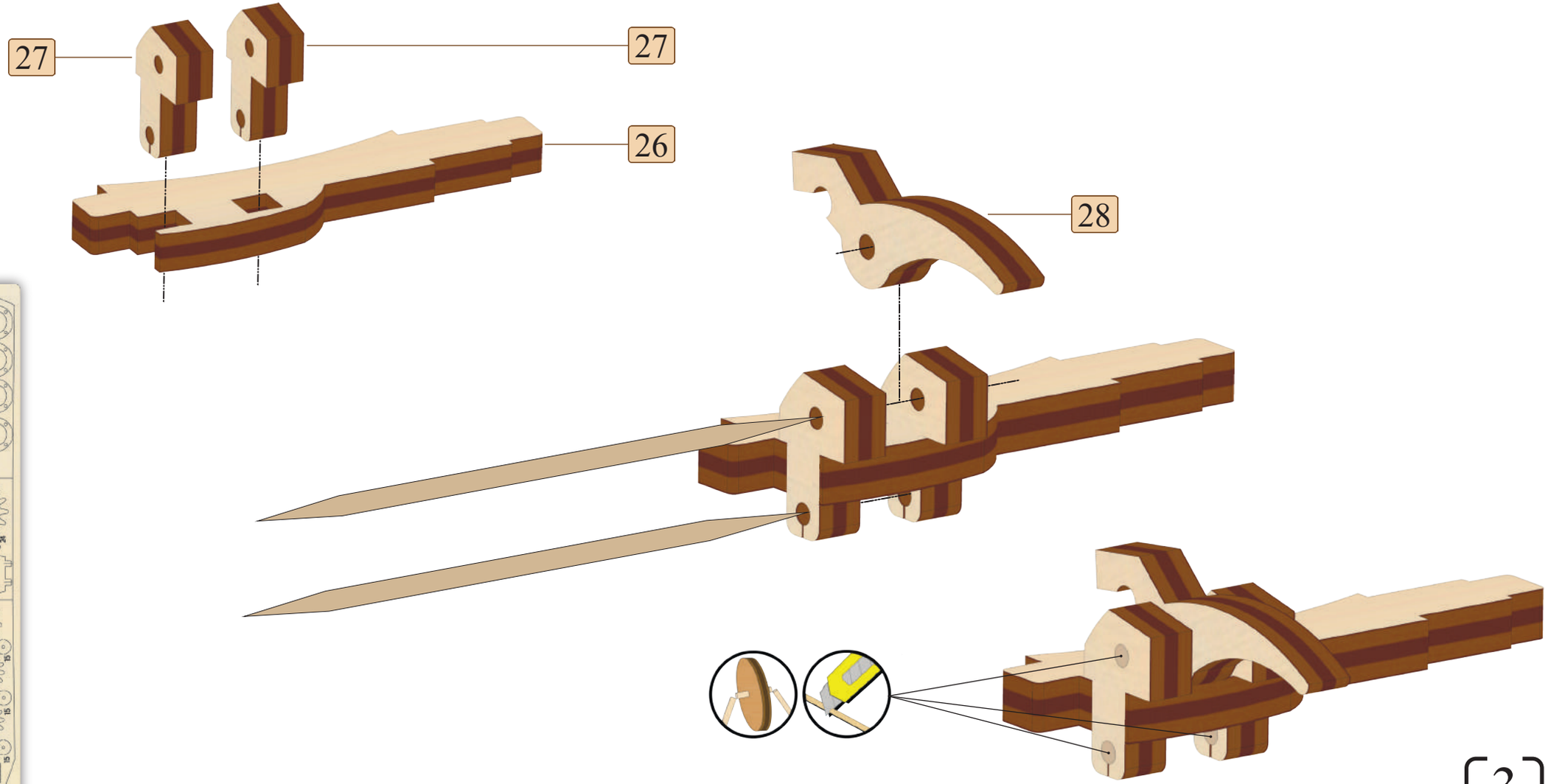

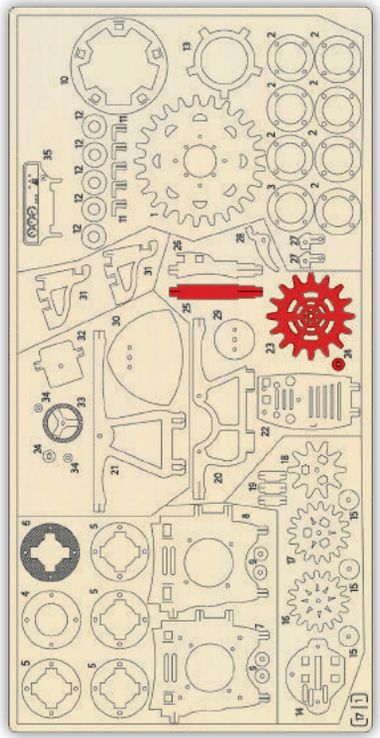

1

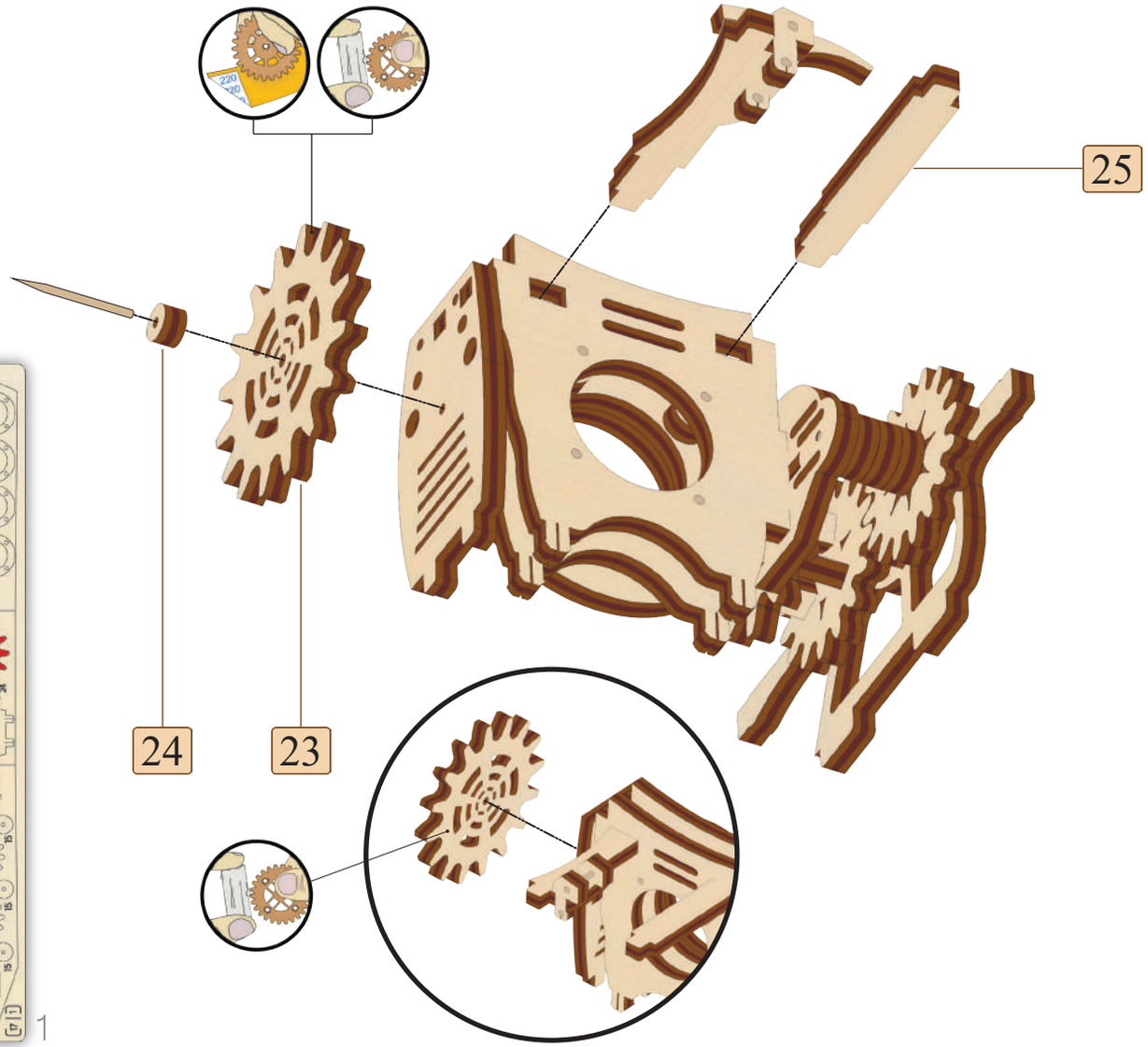

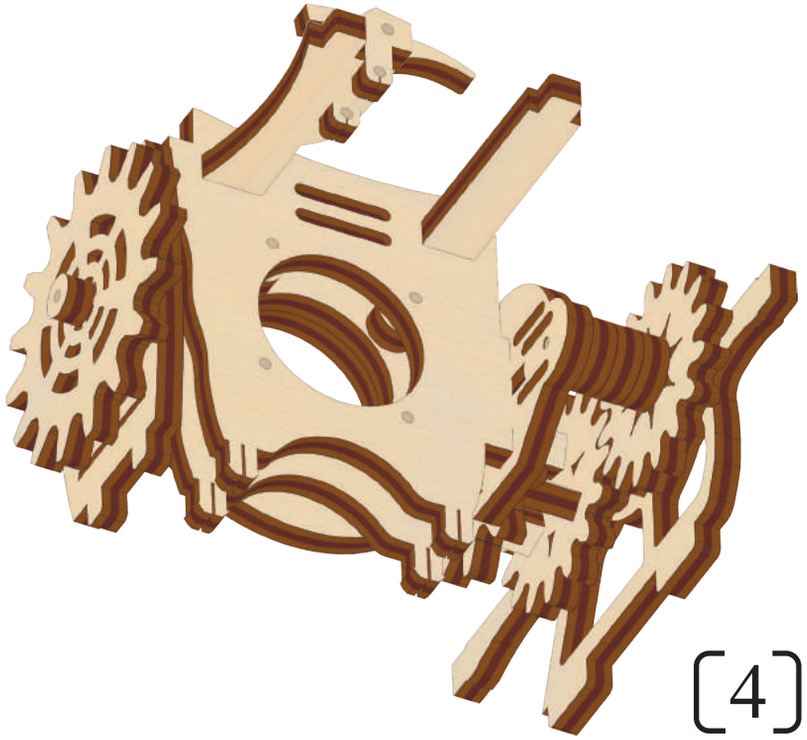

[4]

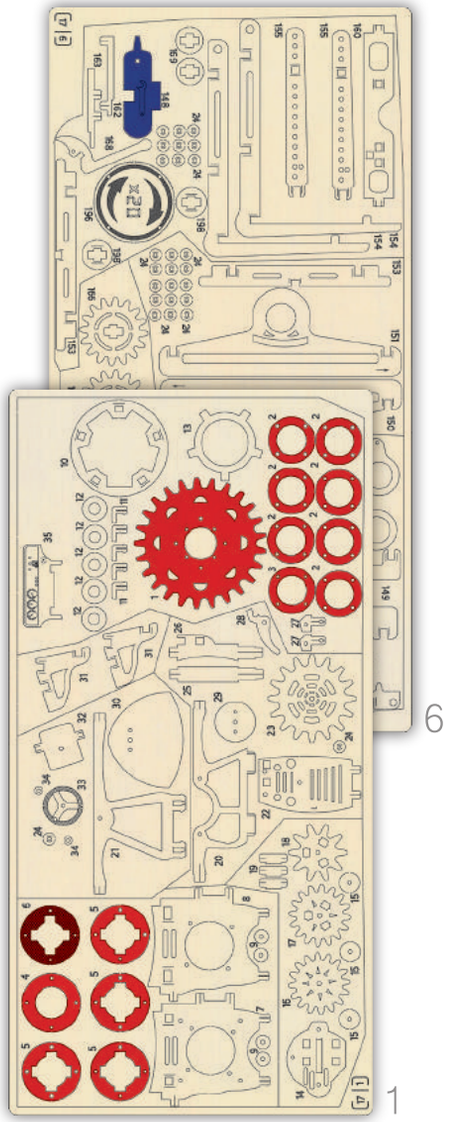
6
1

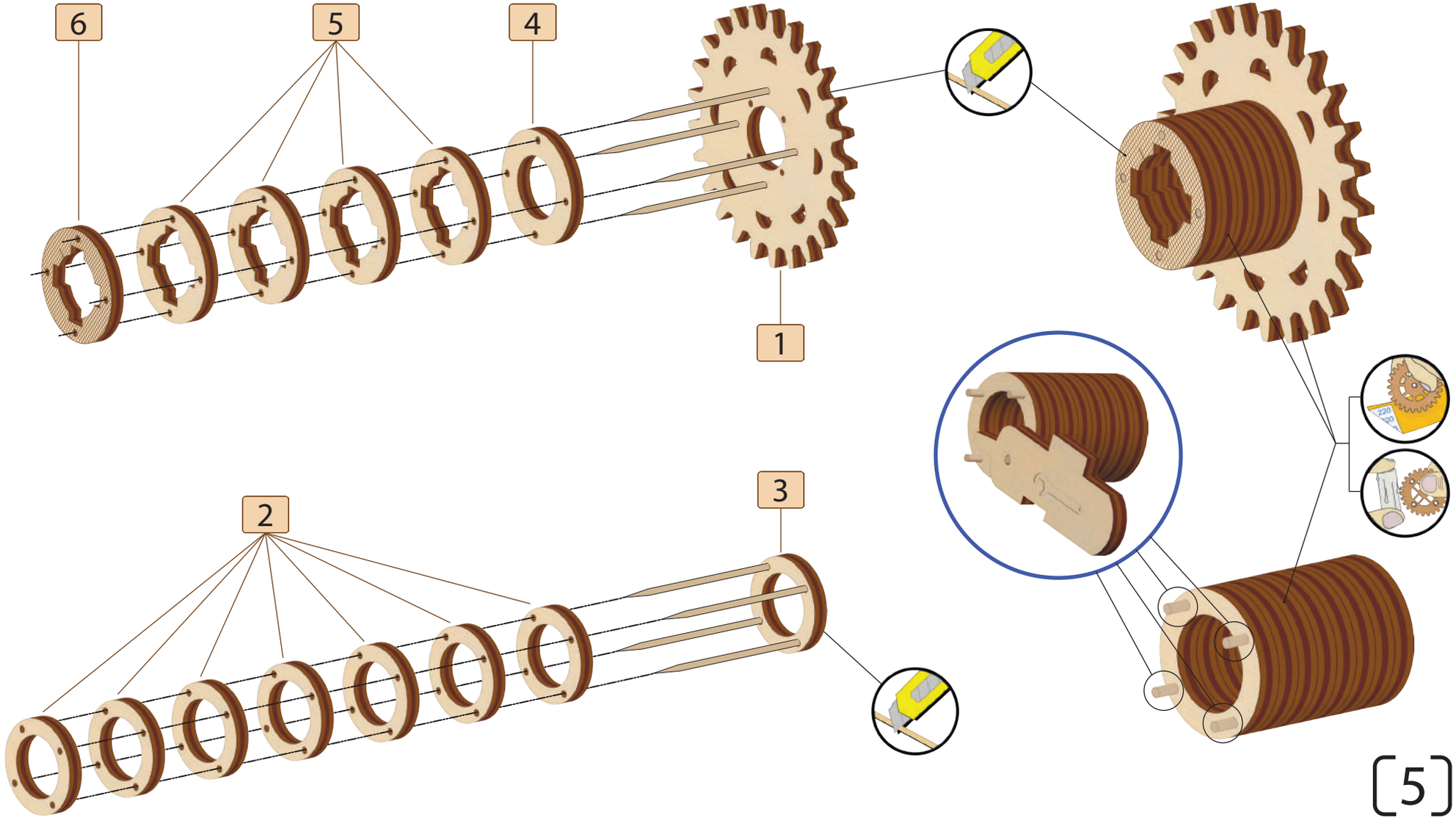
6
5
4
1
2
3

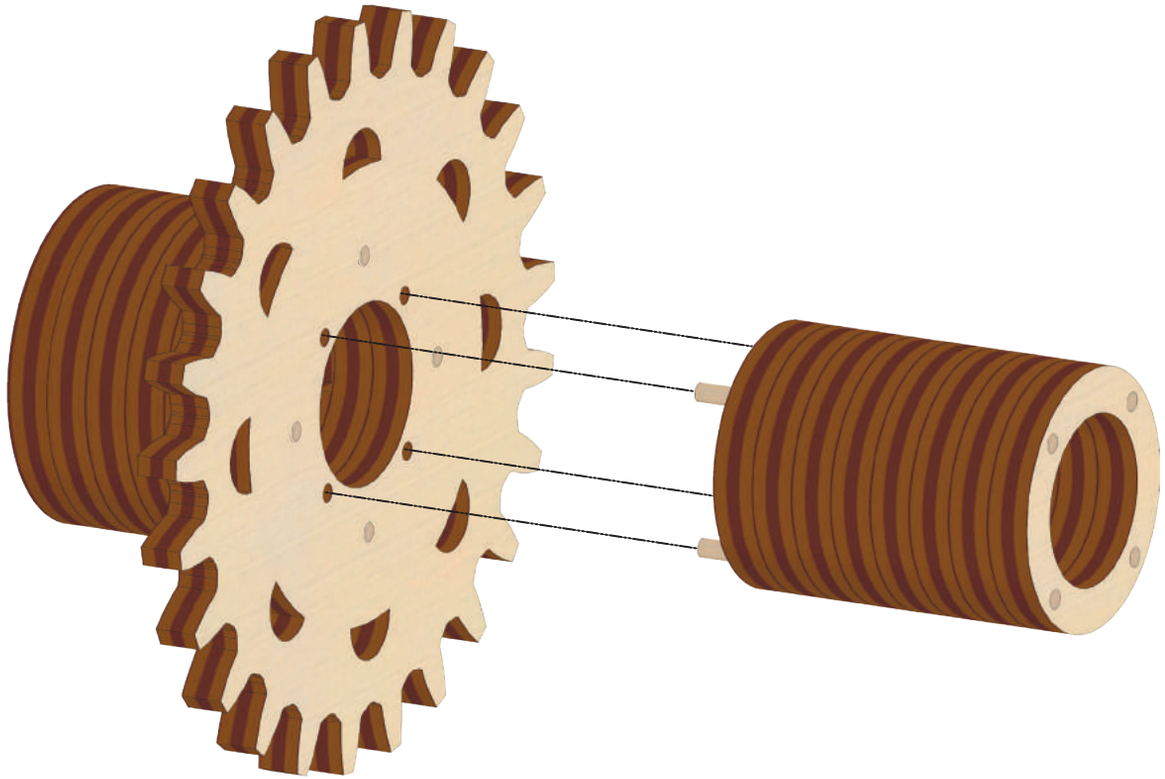

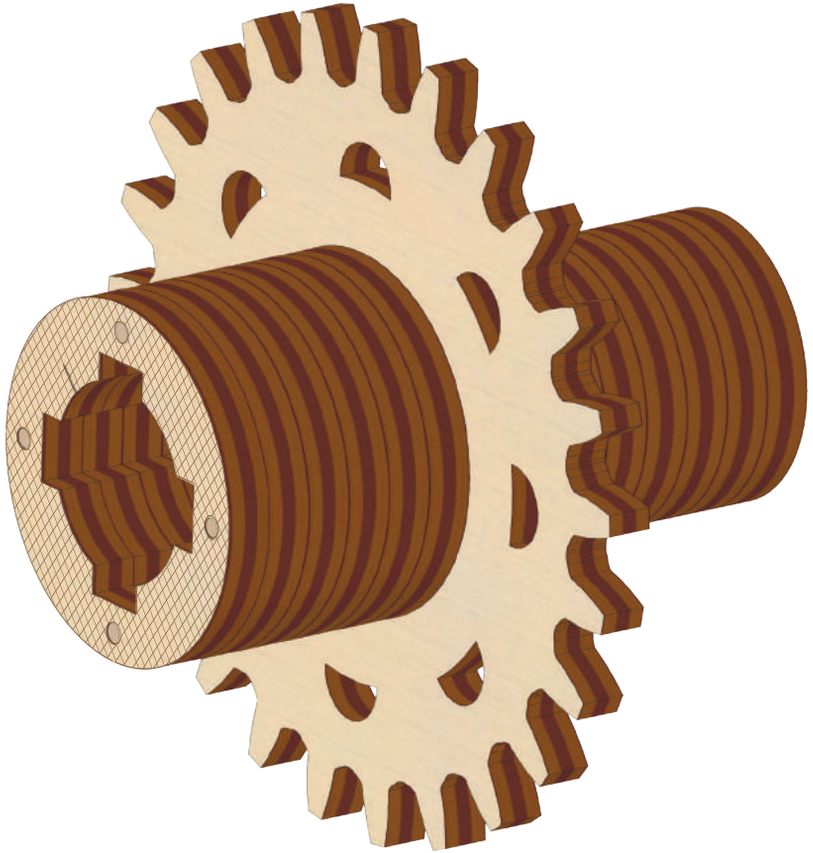

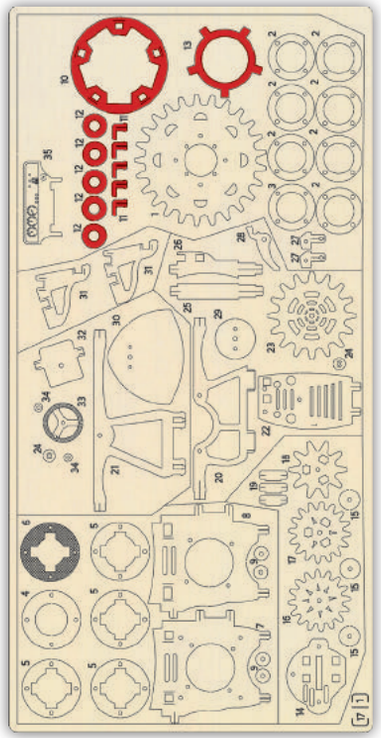

1

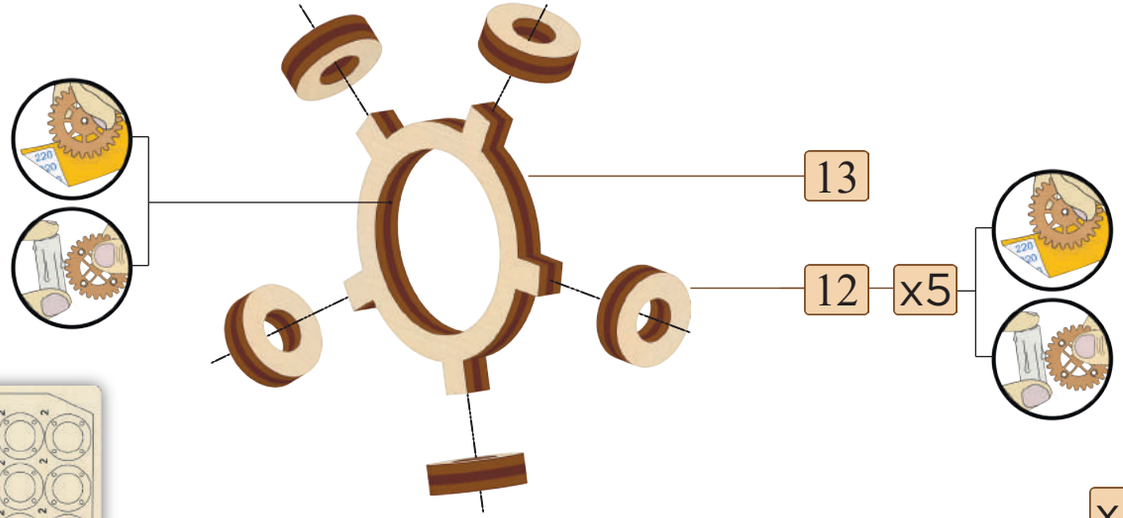

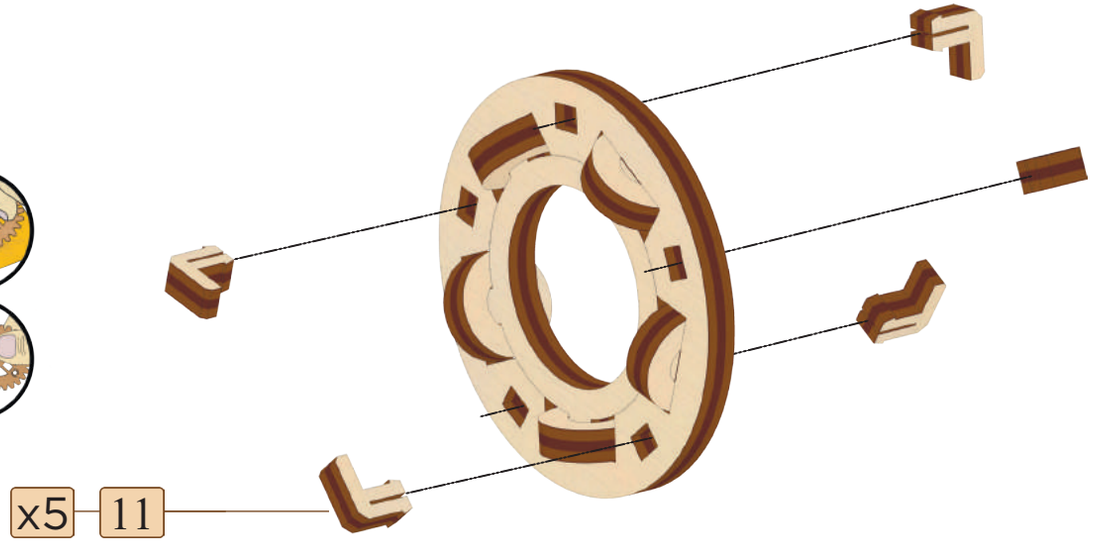

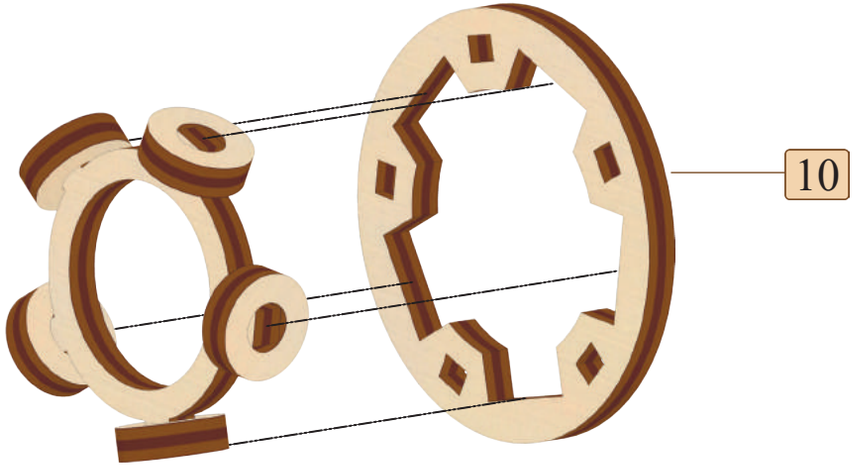

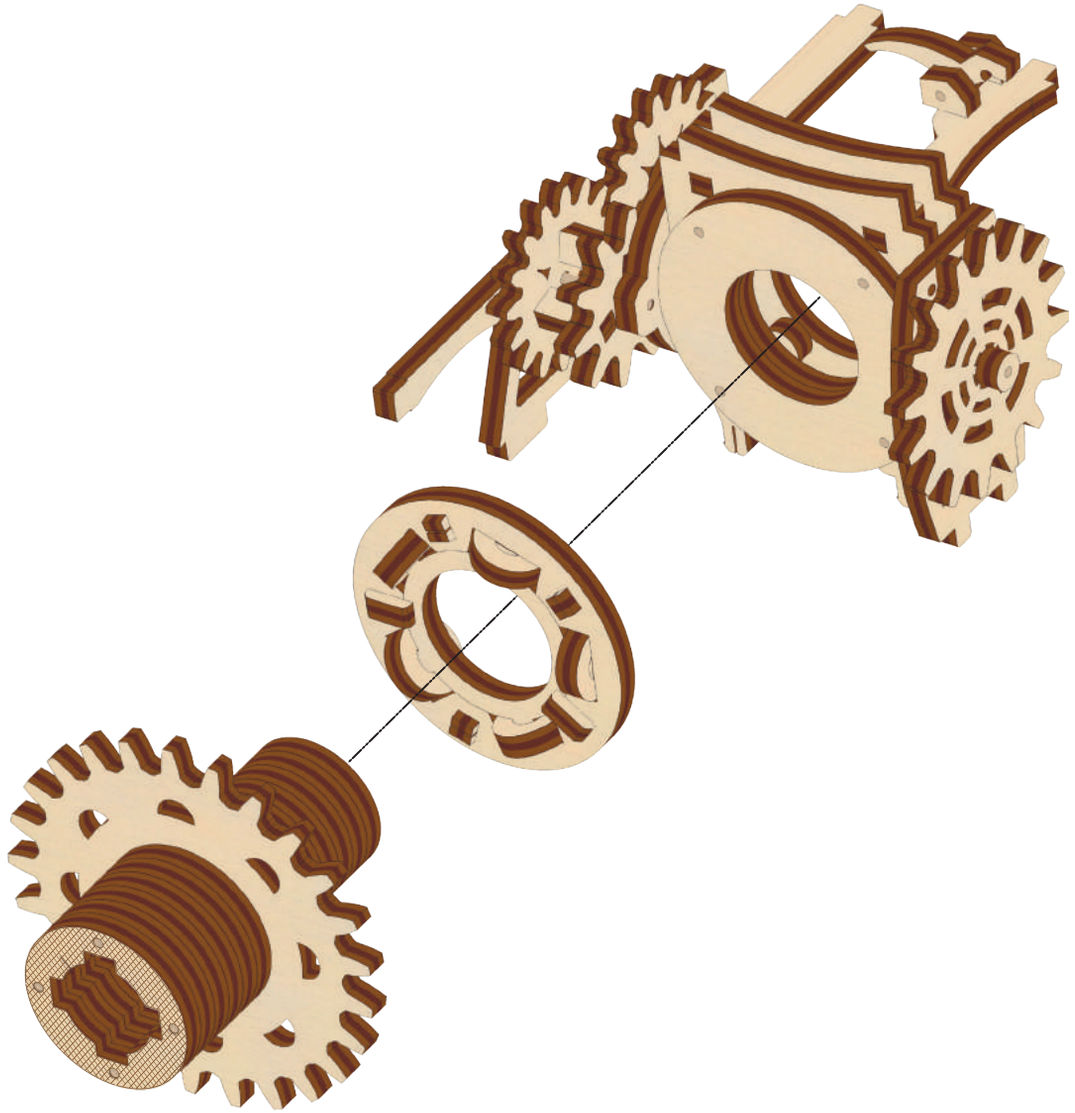

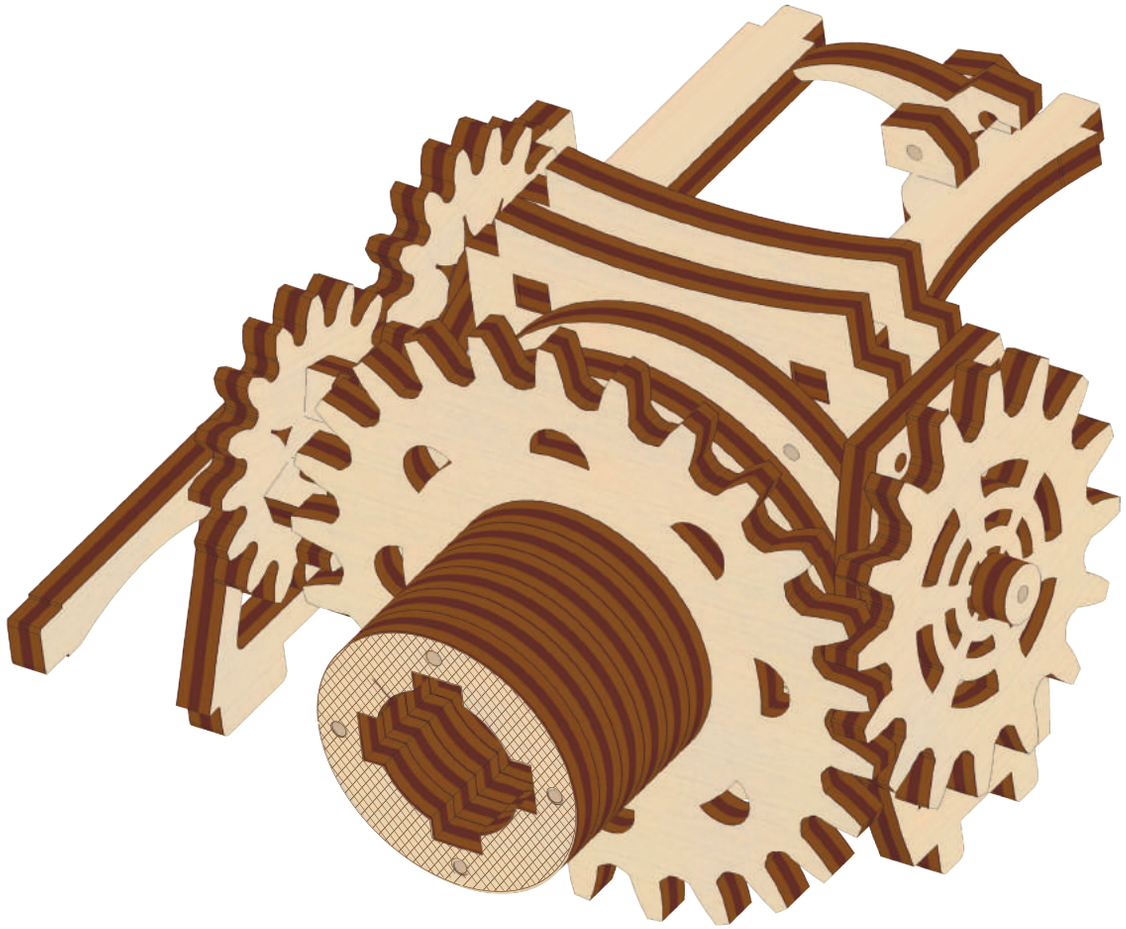

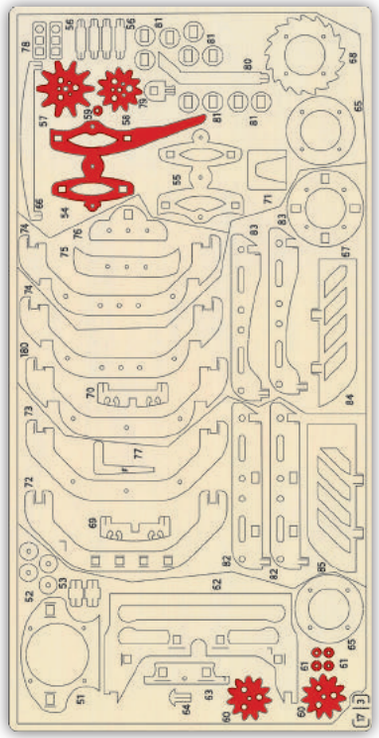

3

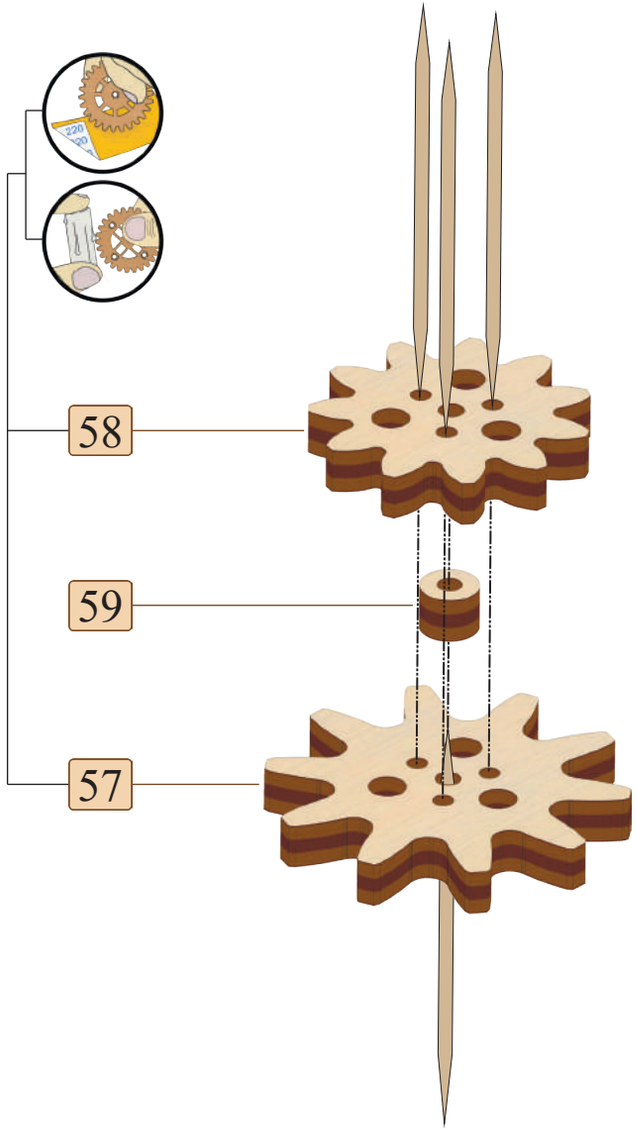

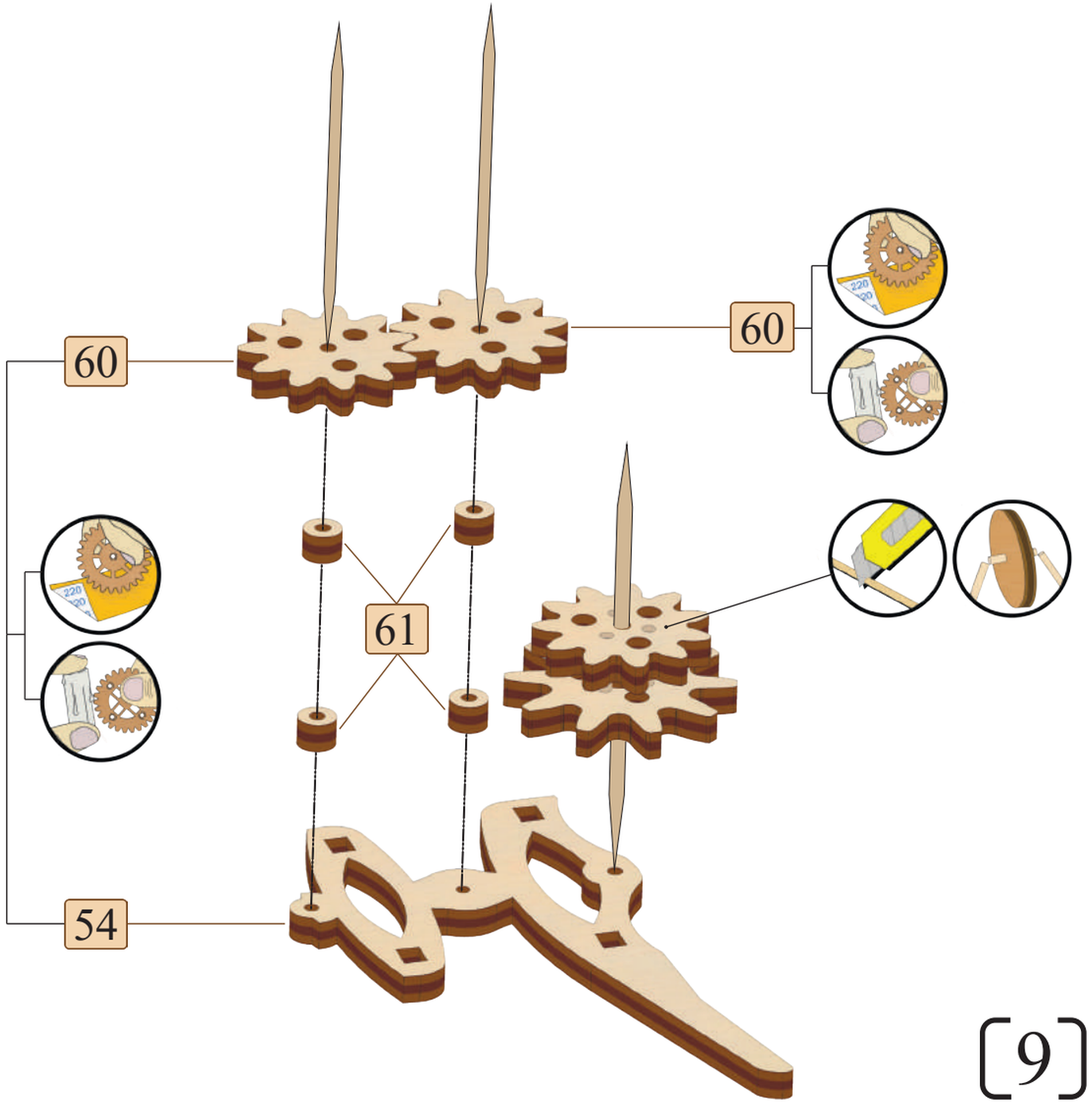

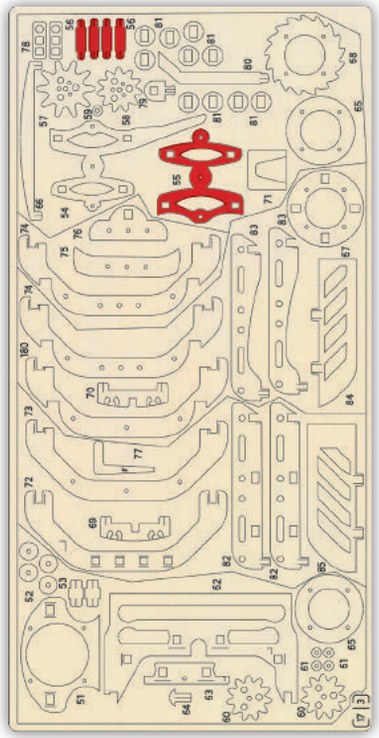

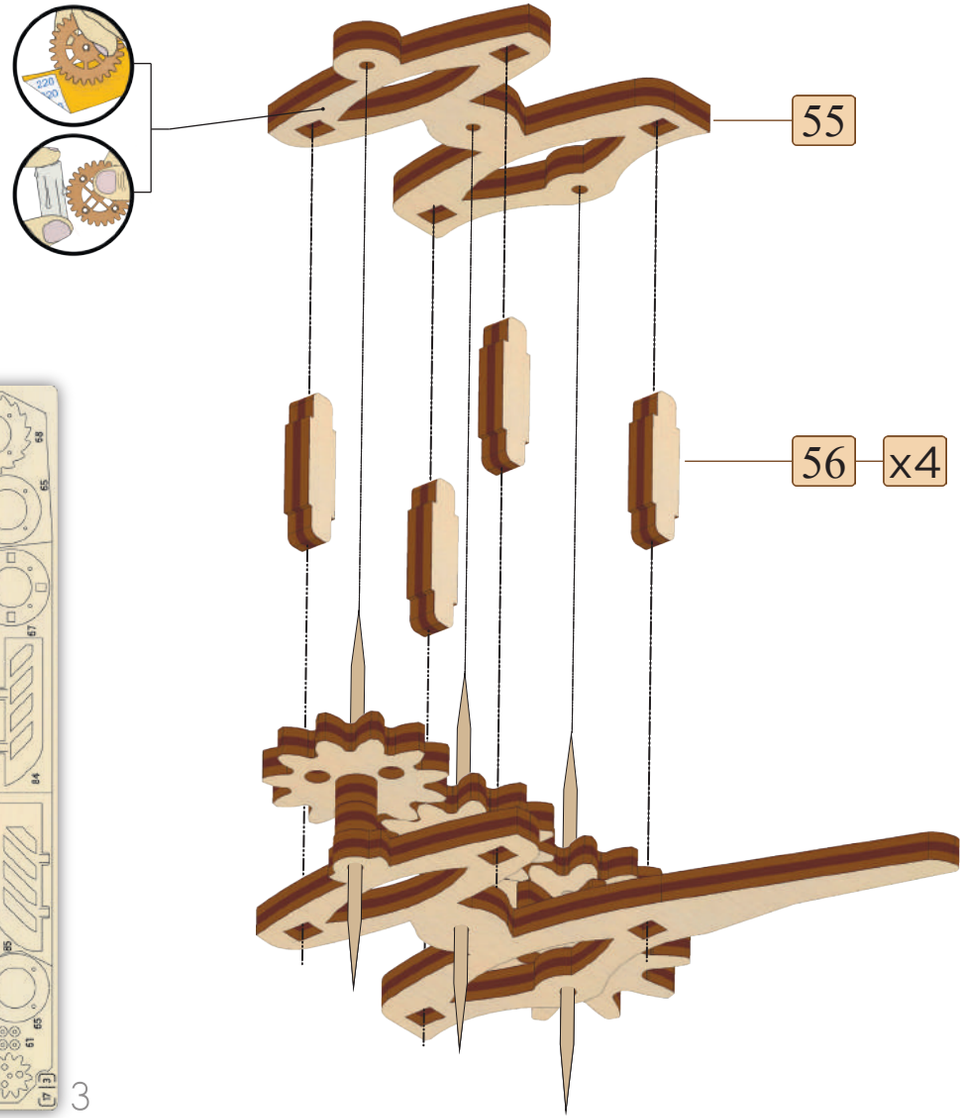
55
56
x4

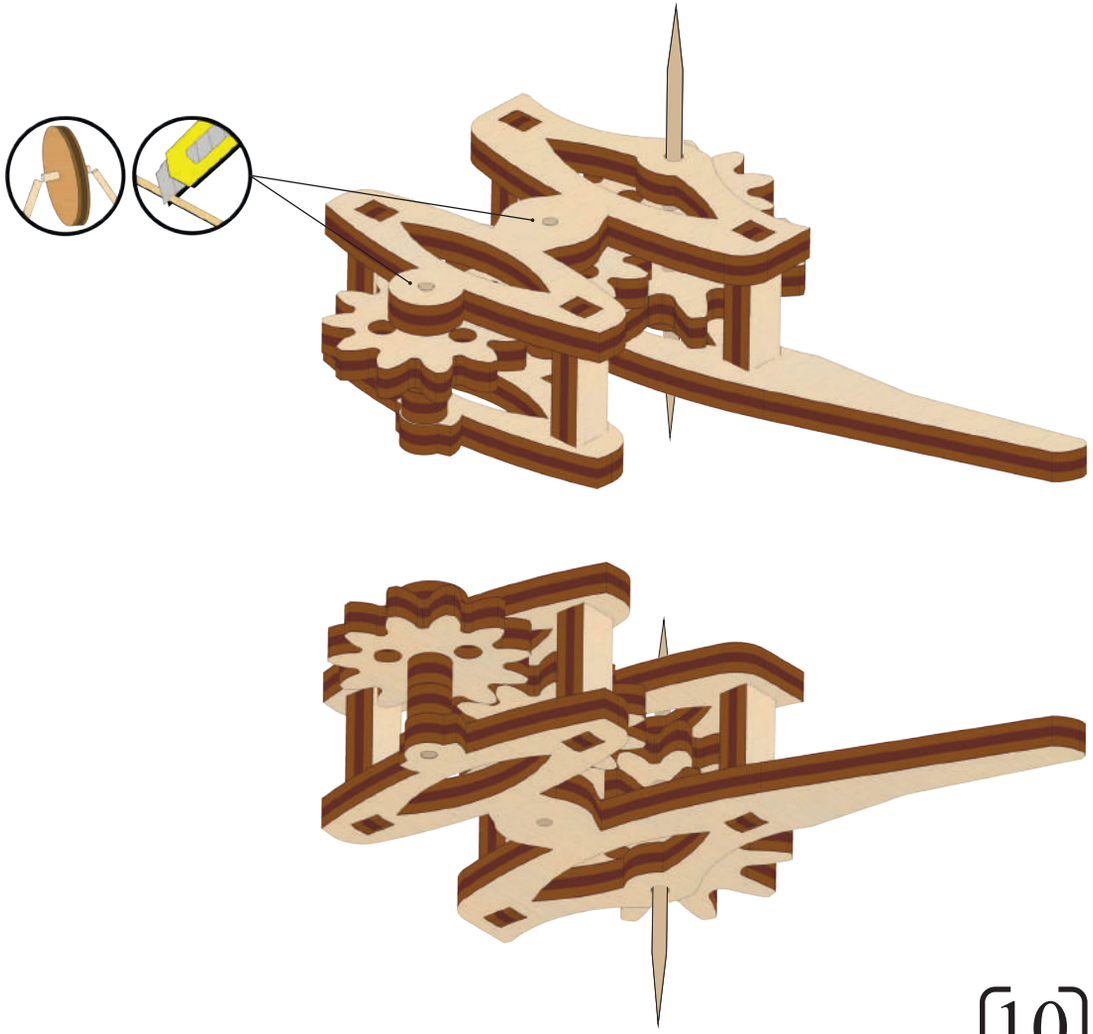

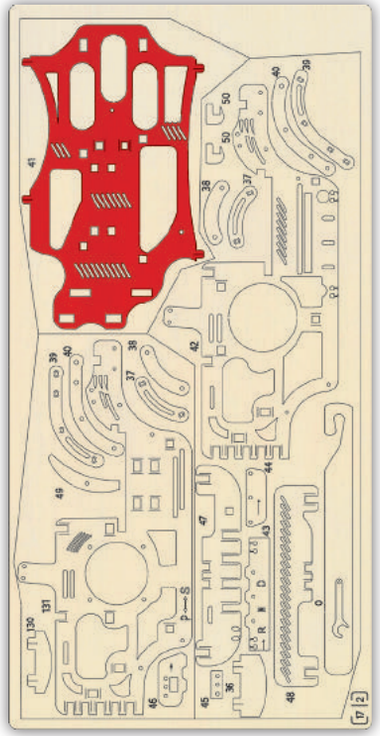

2

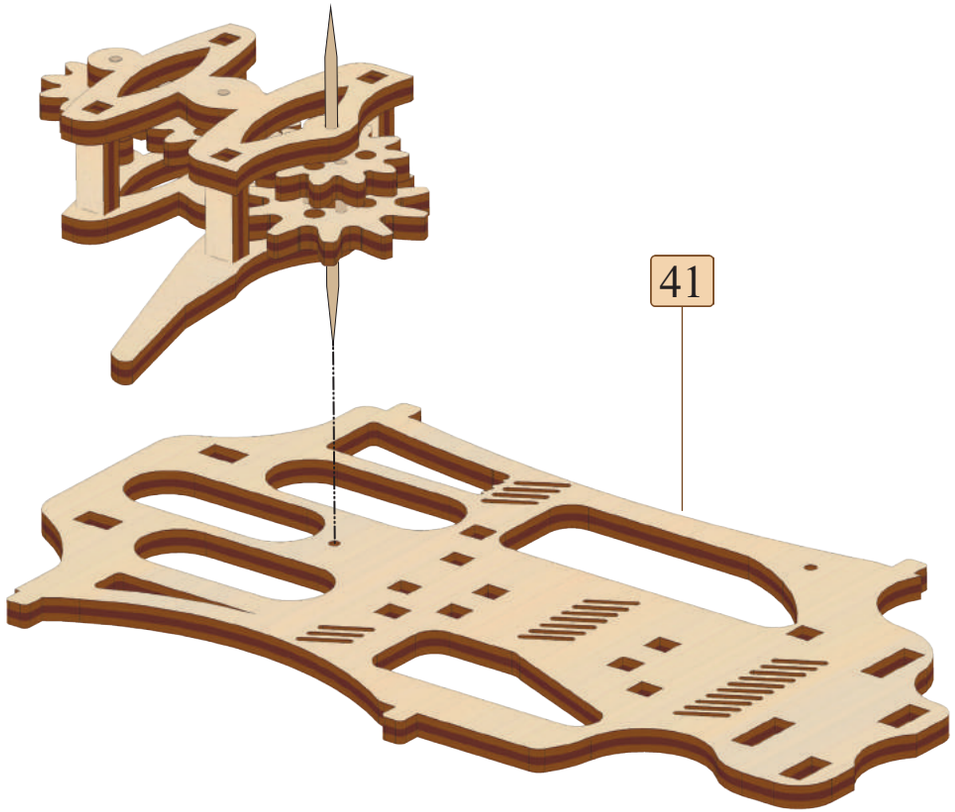

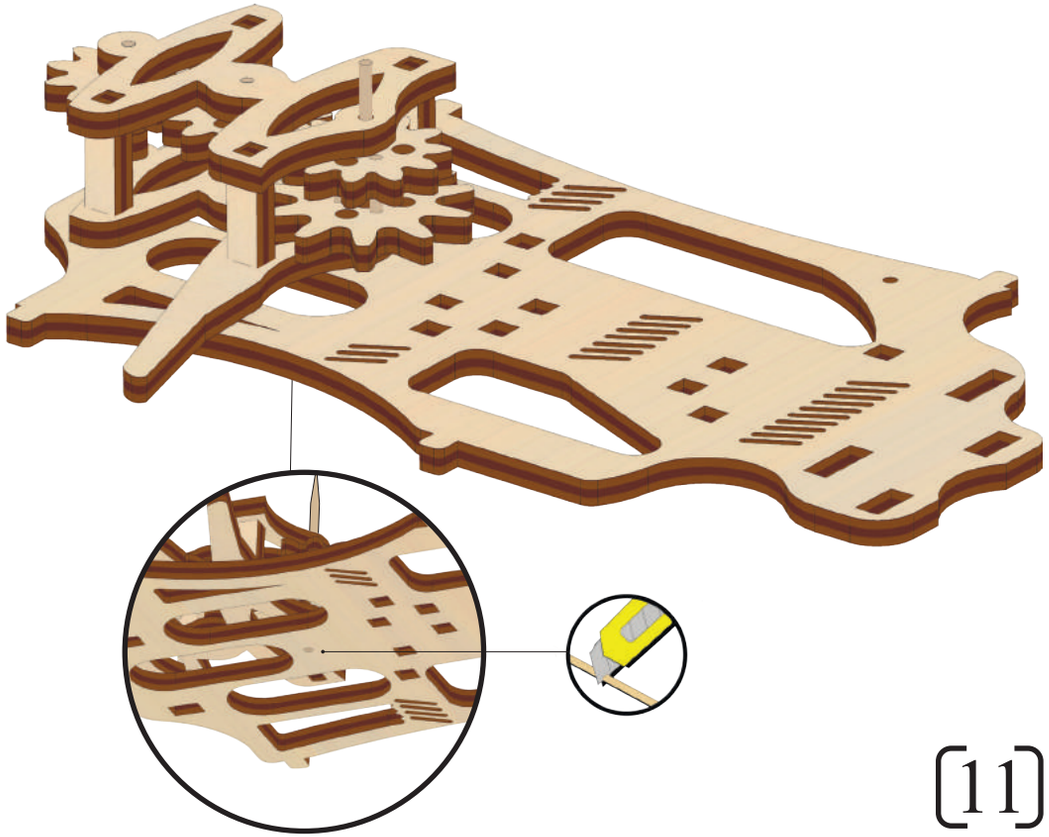

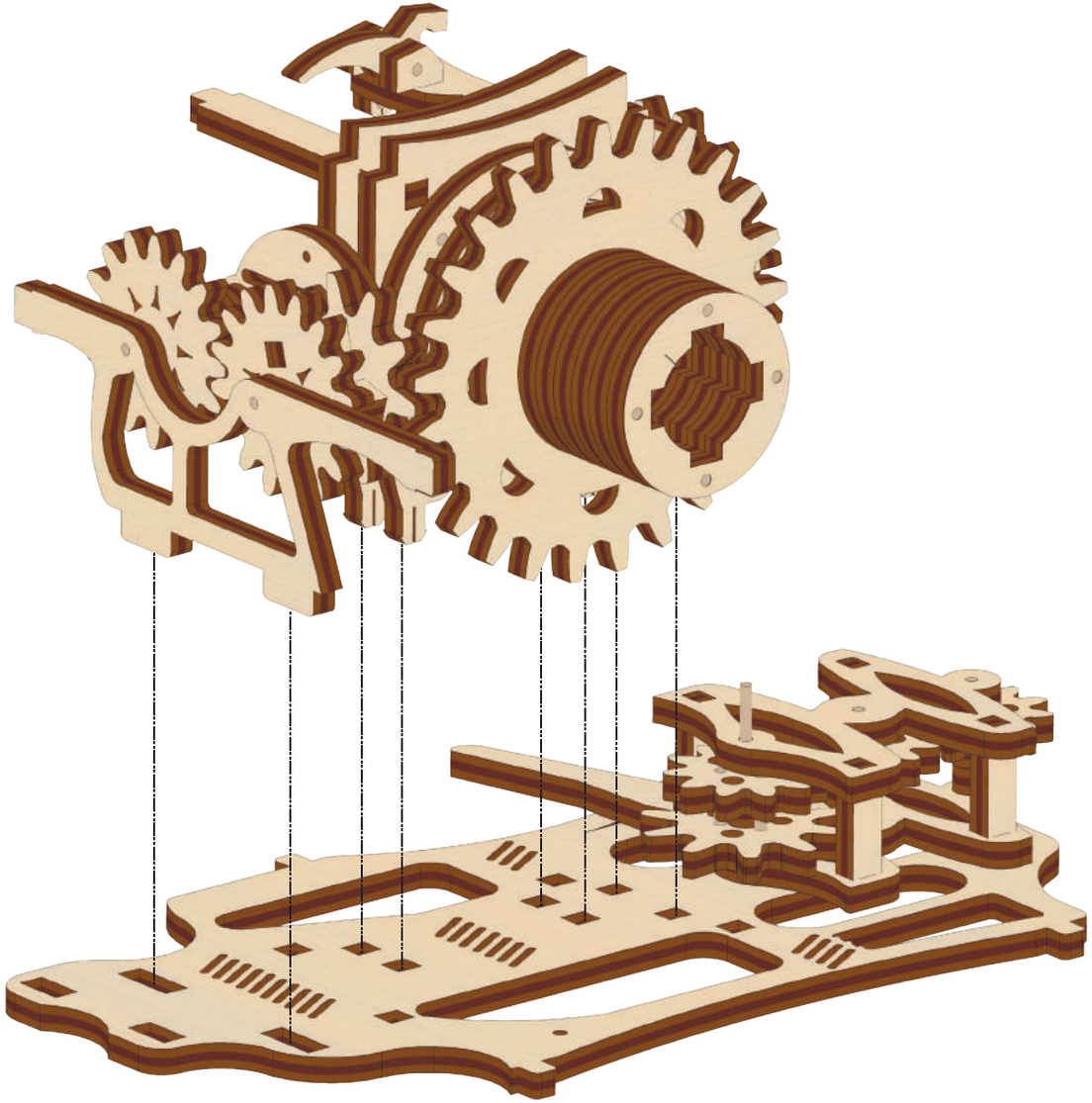

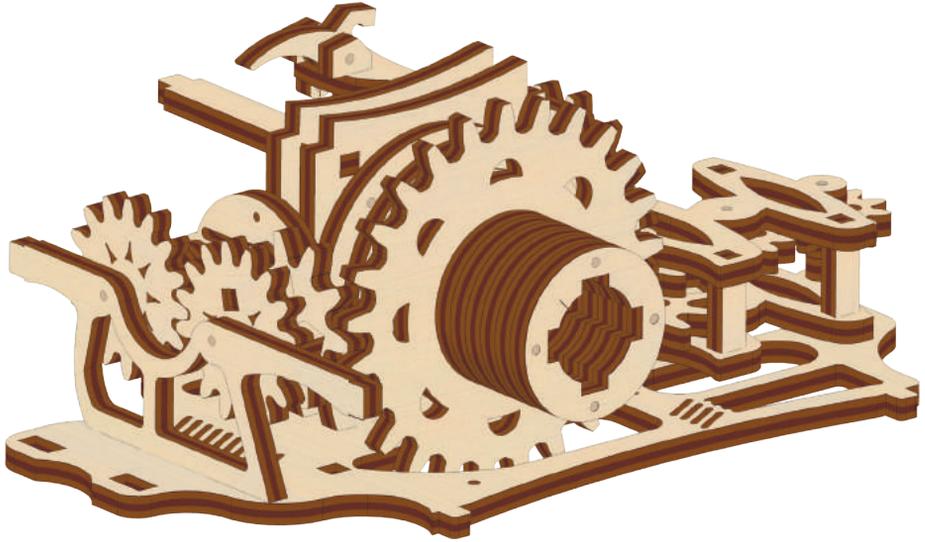

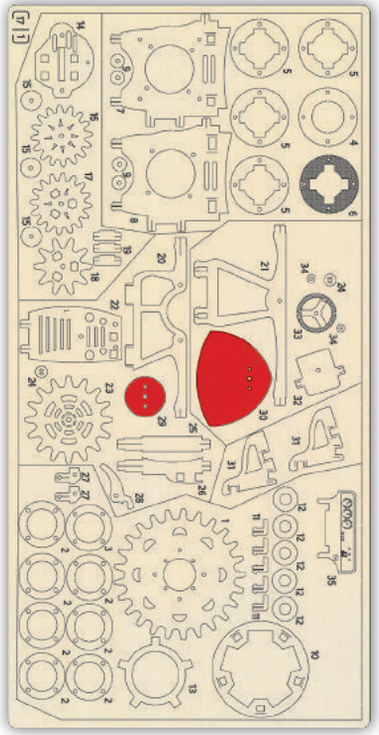

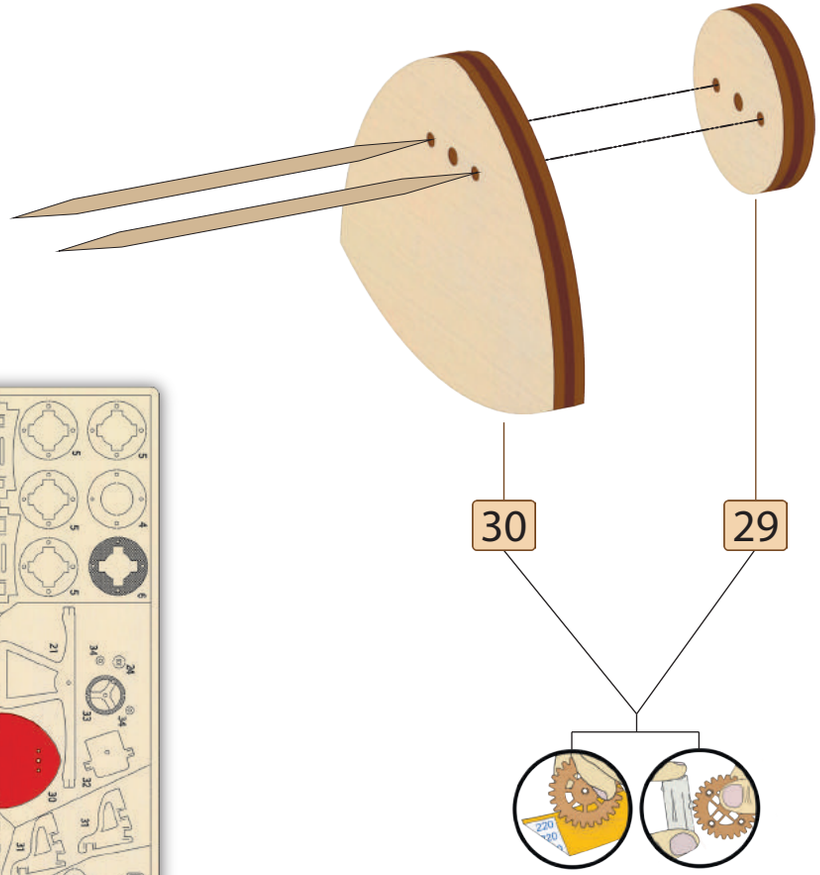
30
29

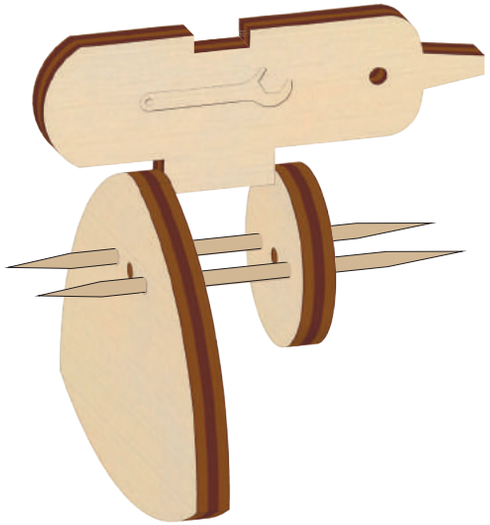

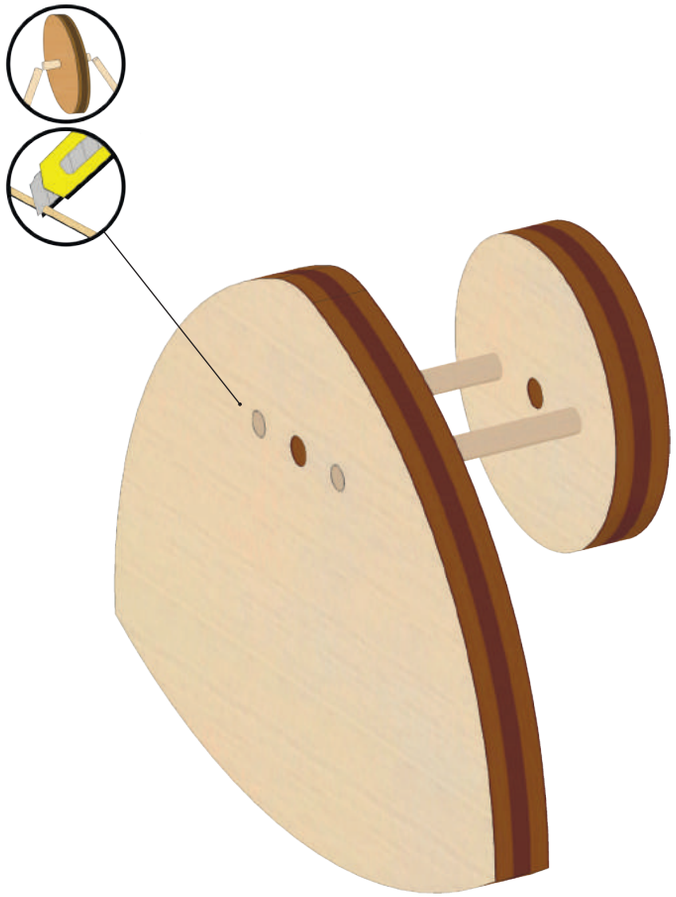

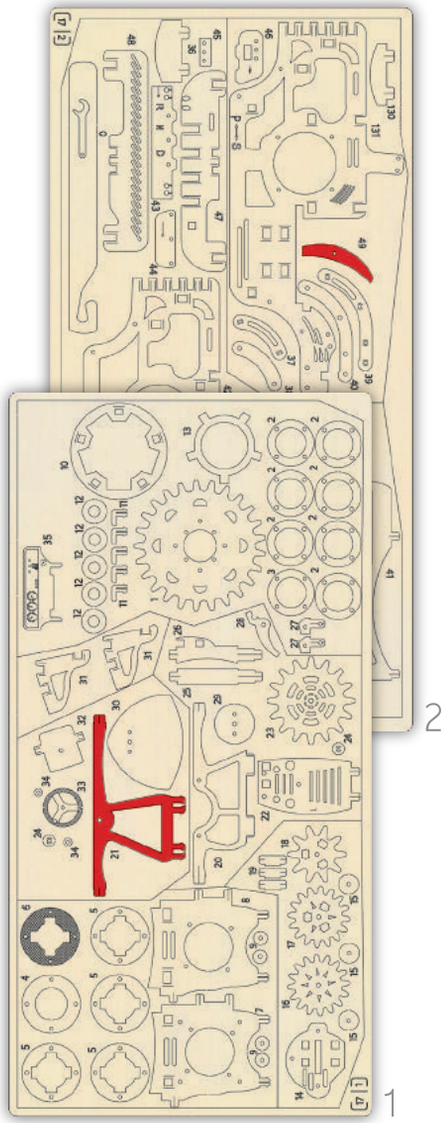
2
1

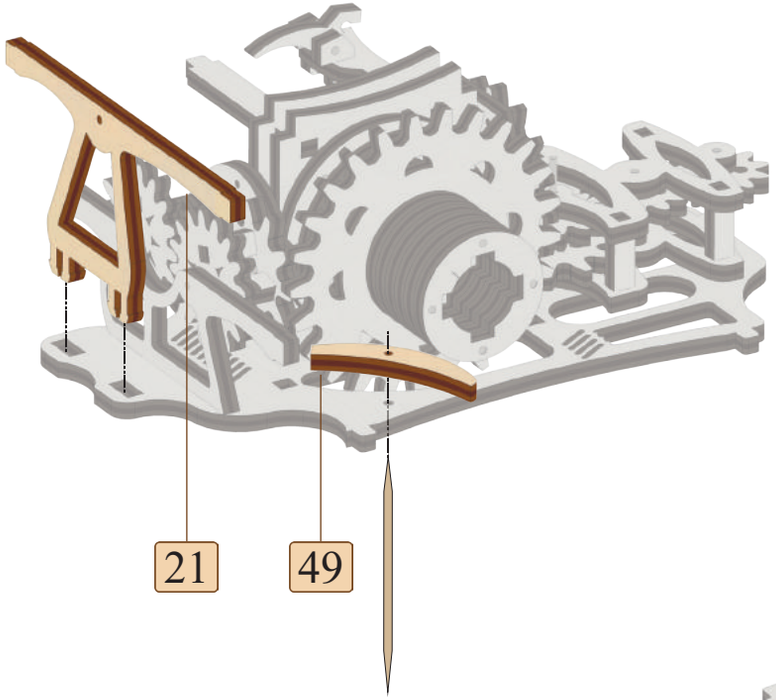
21
49

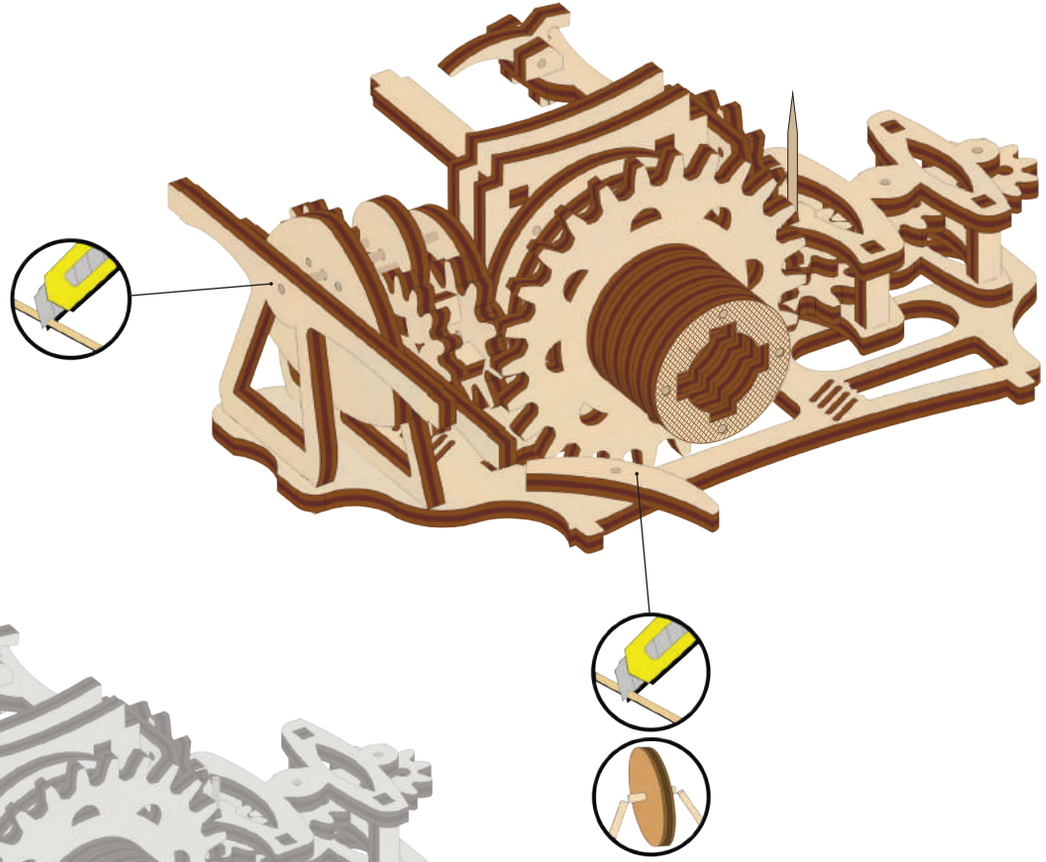

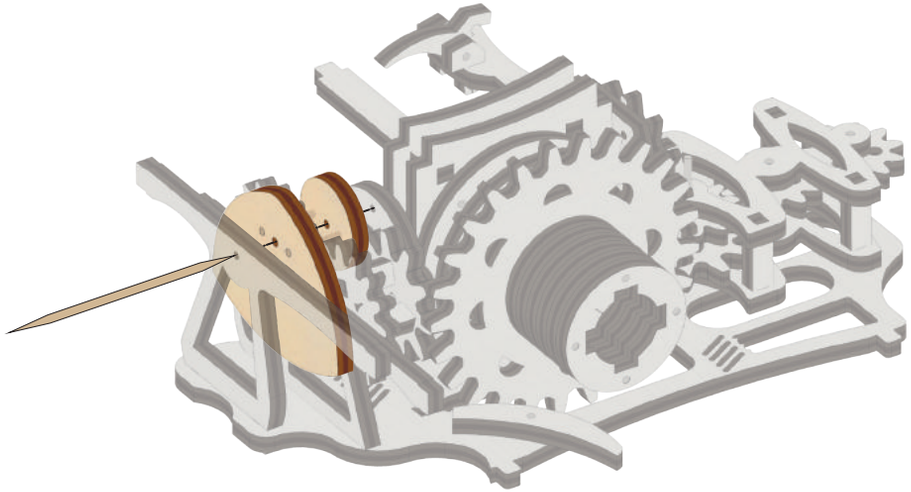

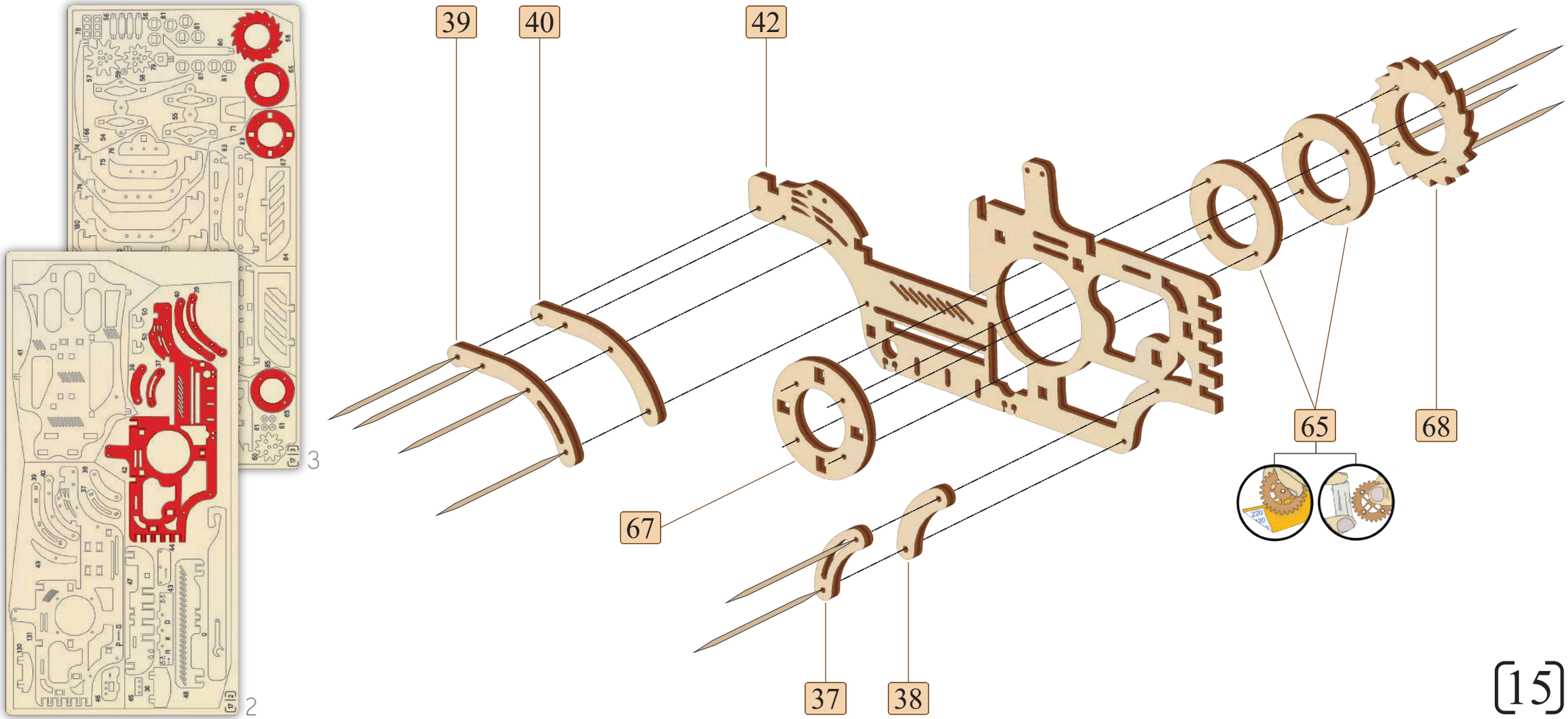
39
40
42
65
68
67
37
38
3
2

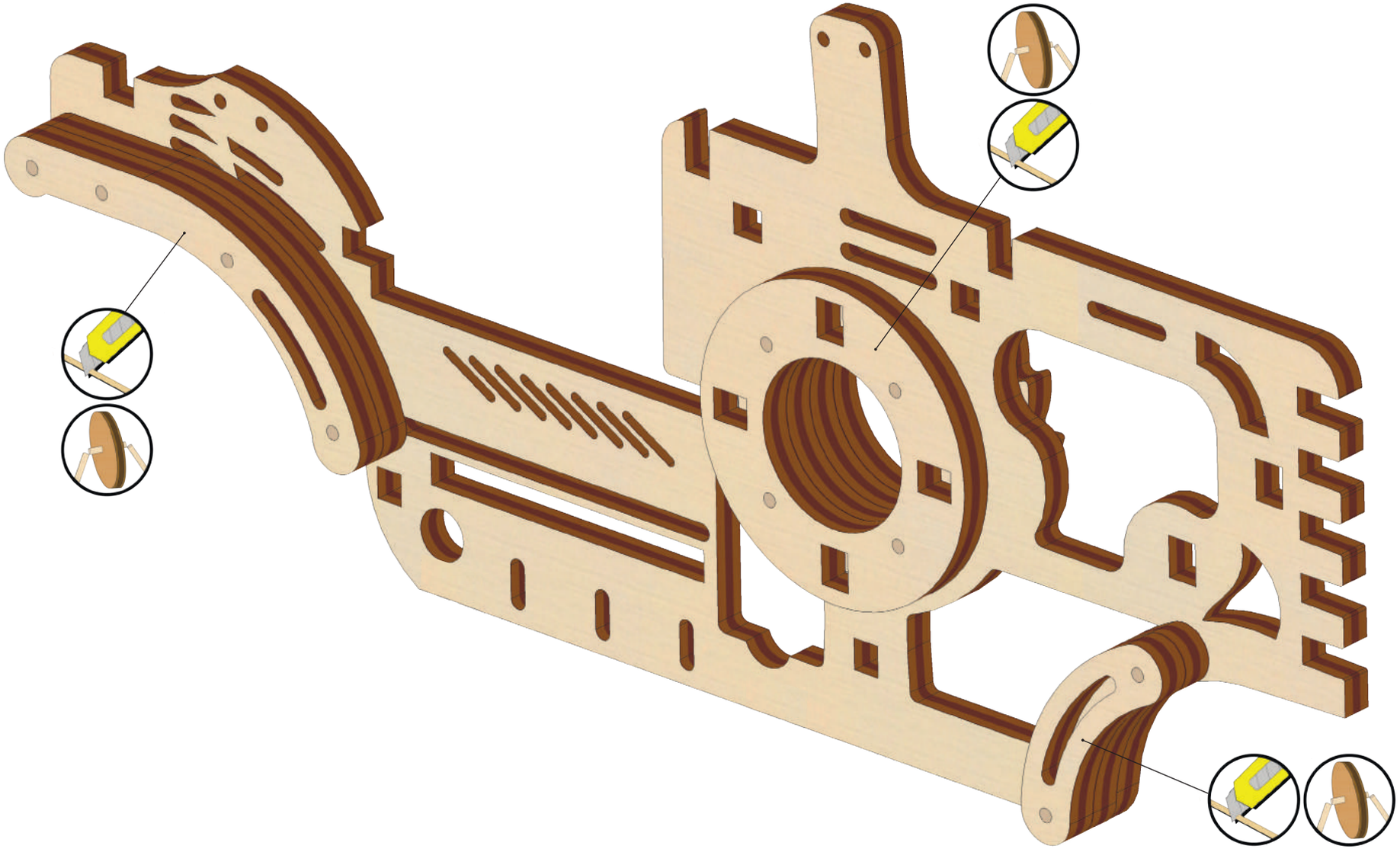

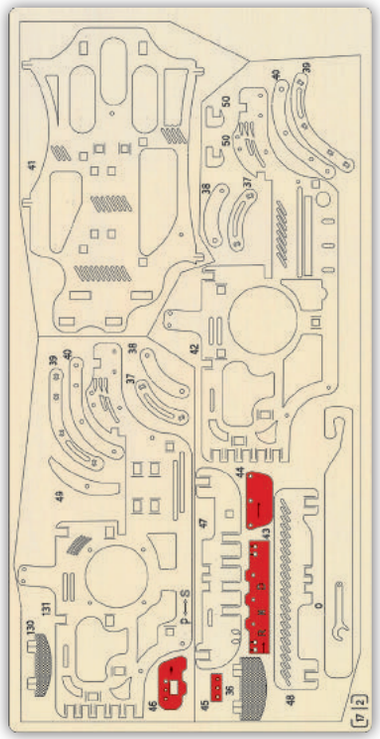

2

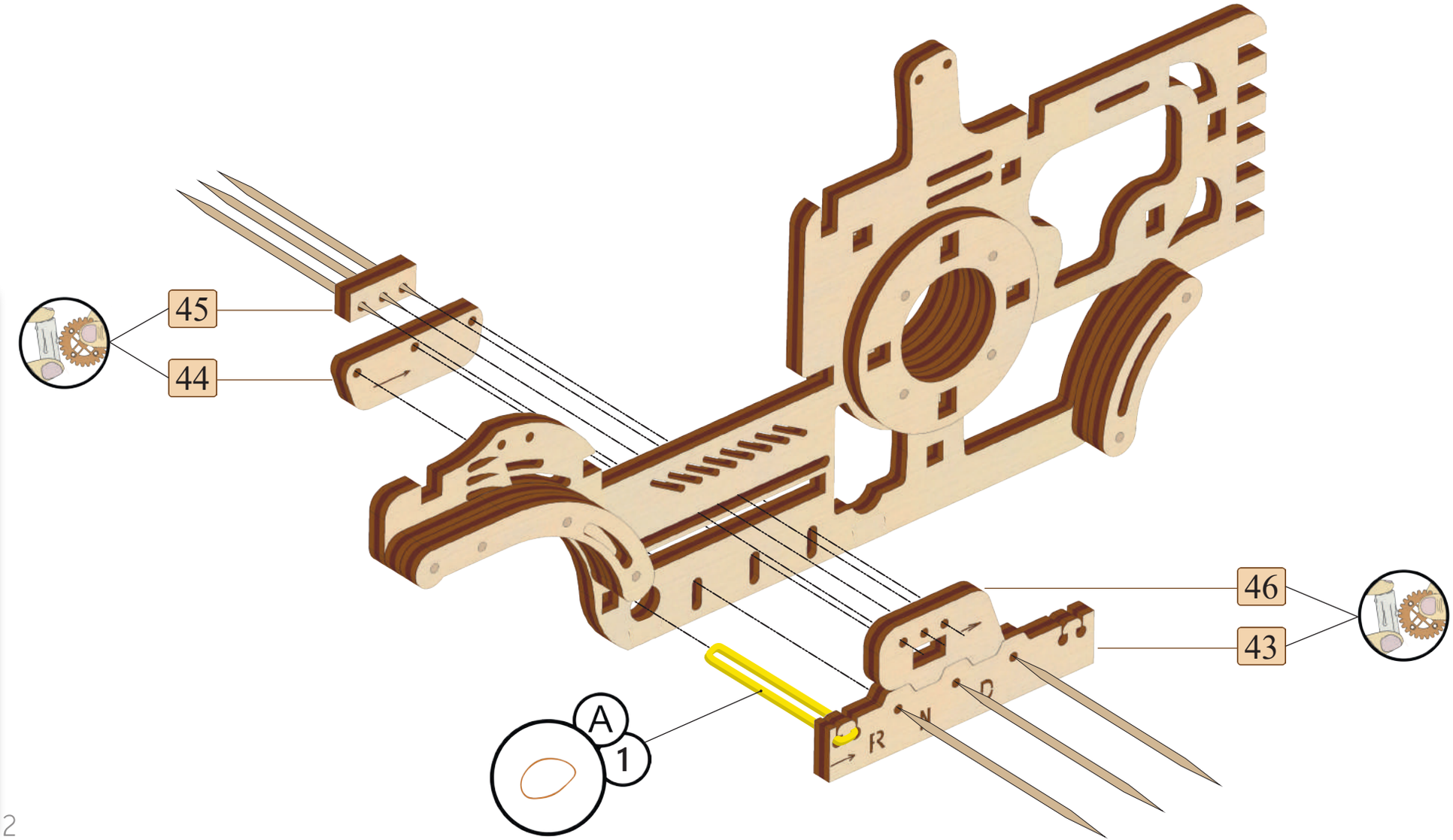

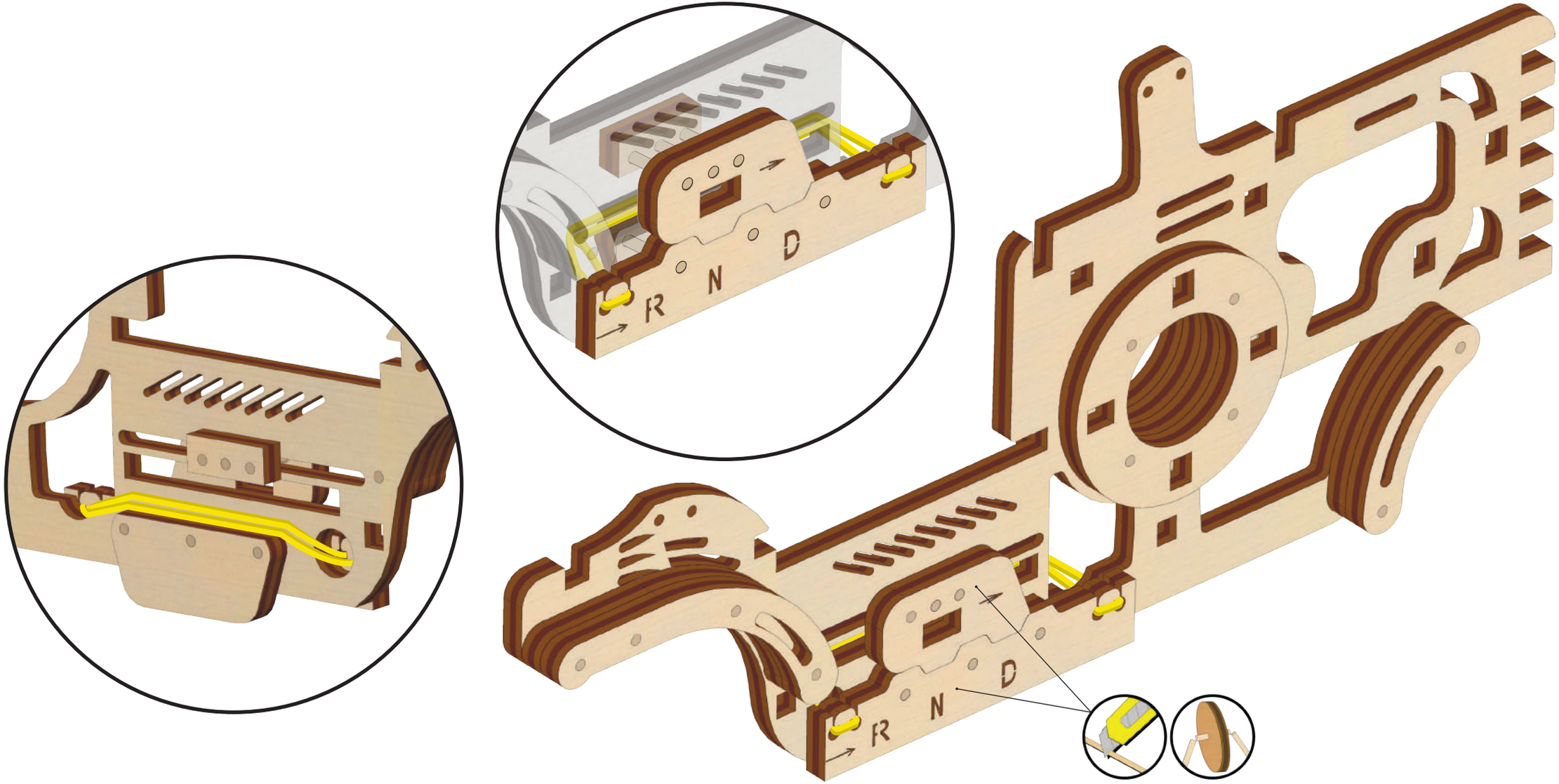
R
N
D
R
N
D

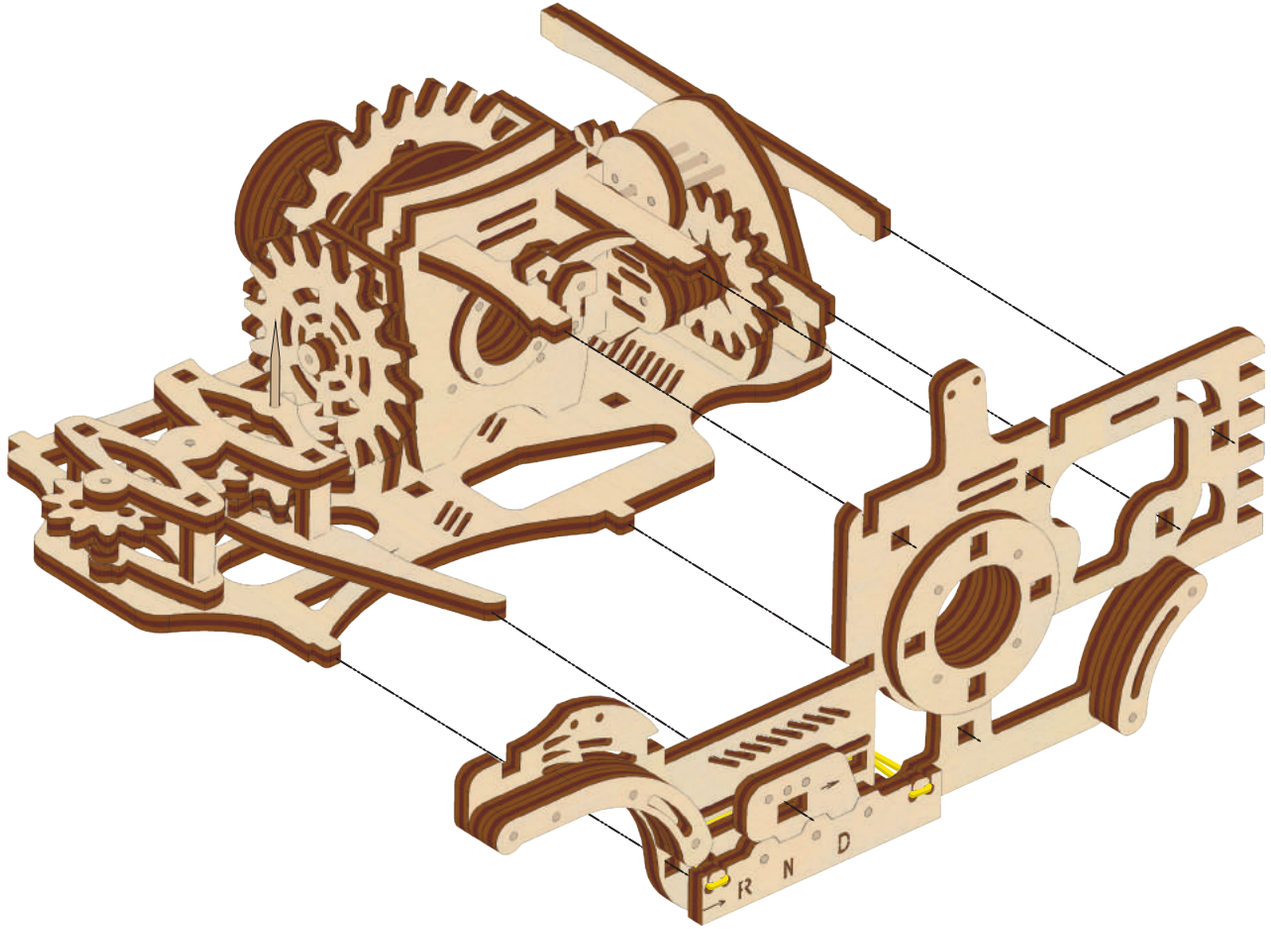
R
N
D

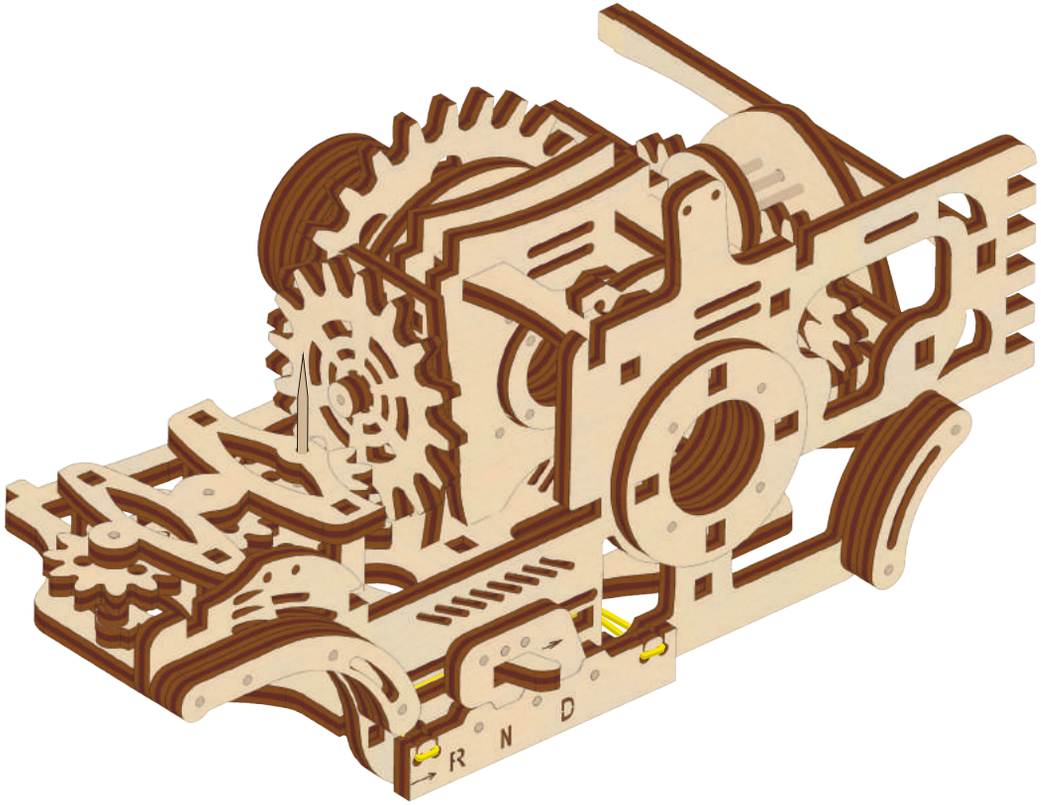
R
N
D

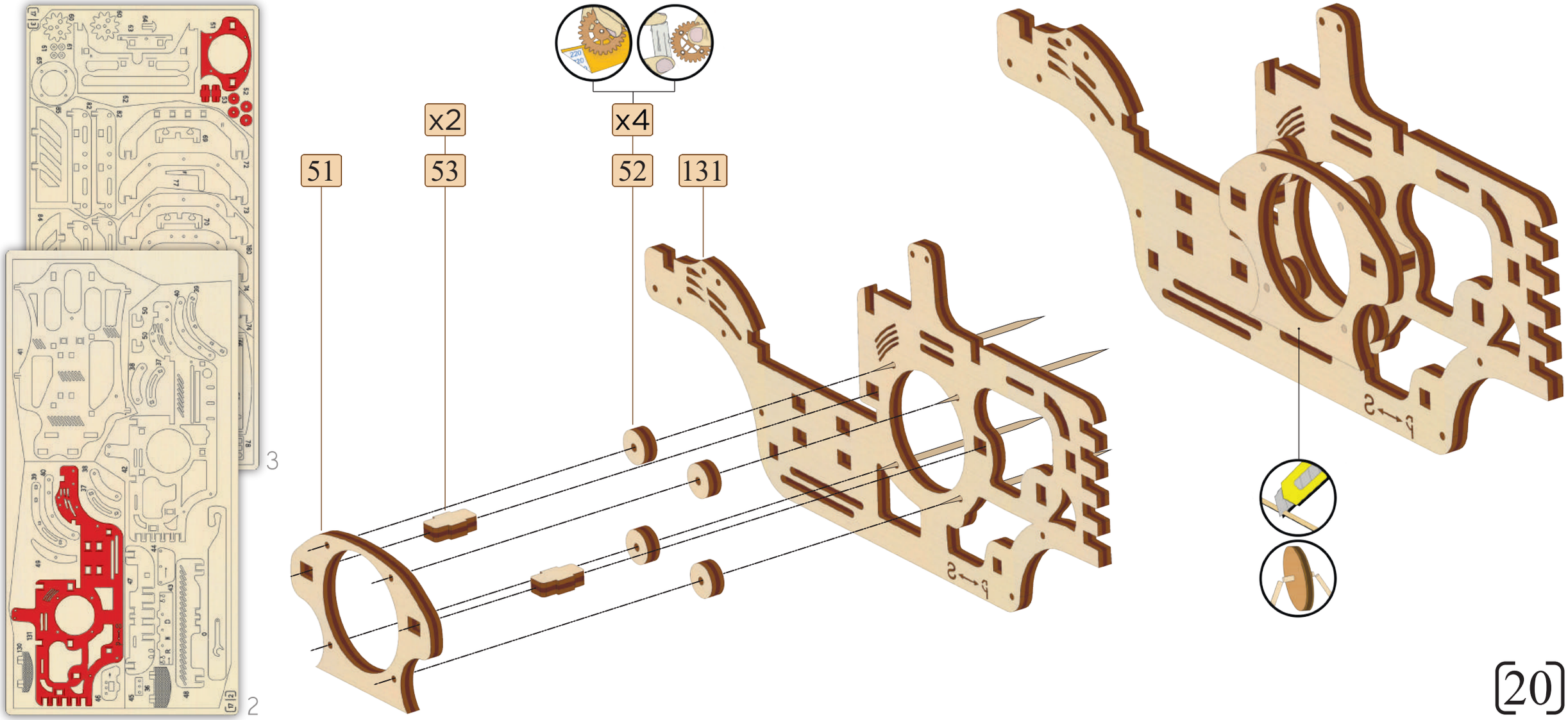
x2
x4
51
53
52
131
3
2

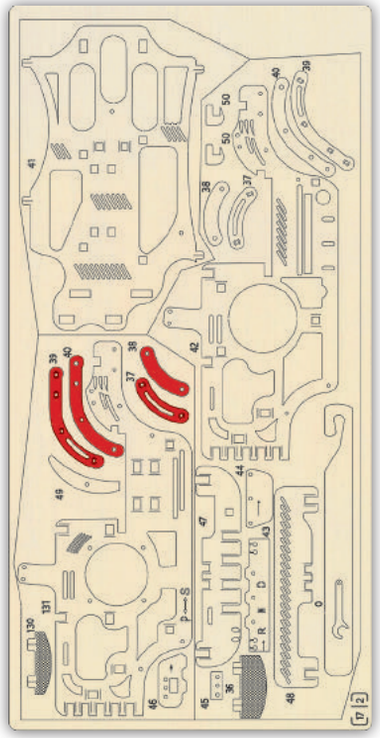

2

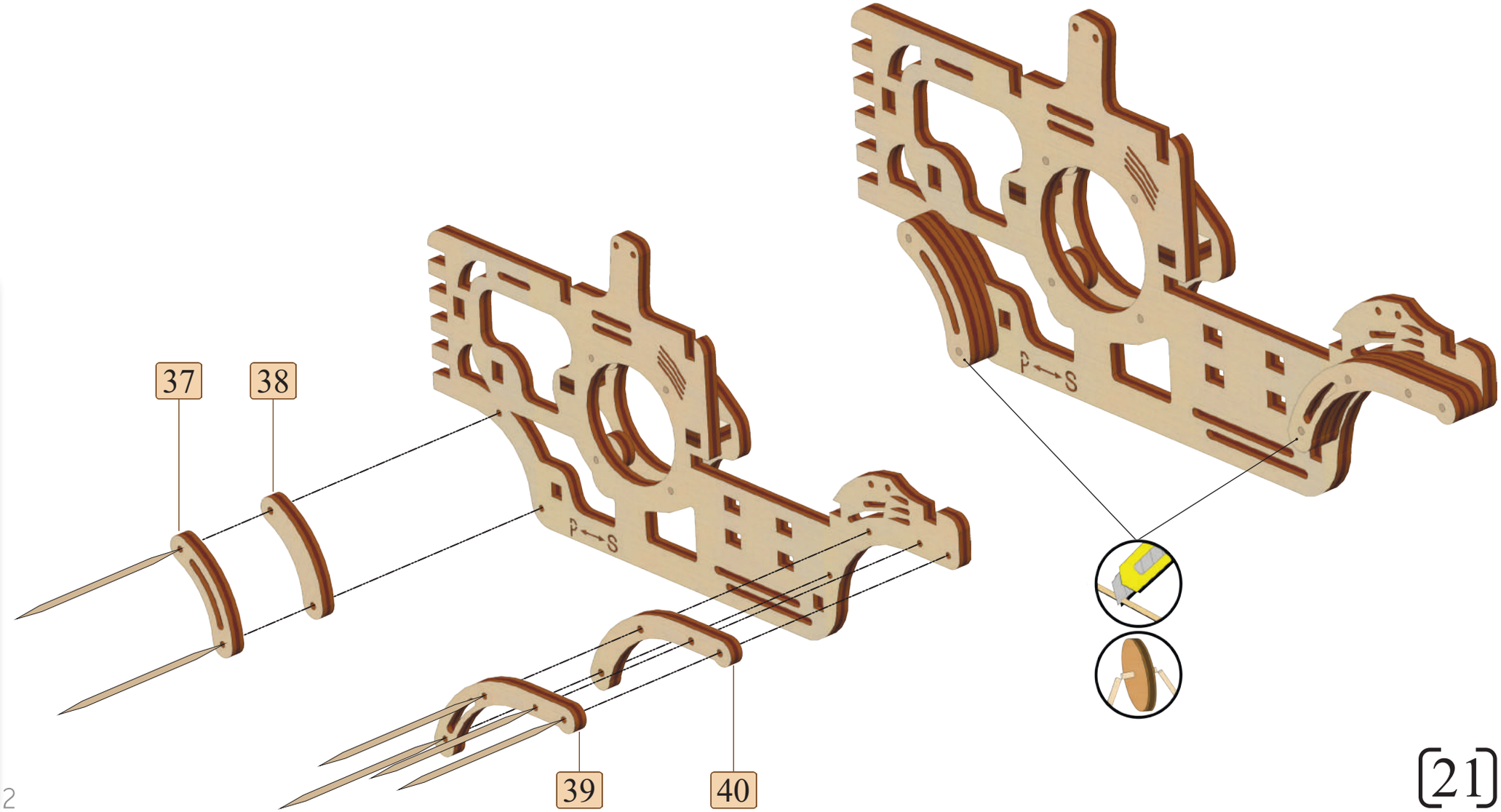

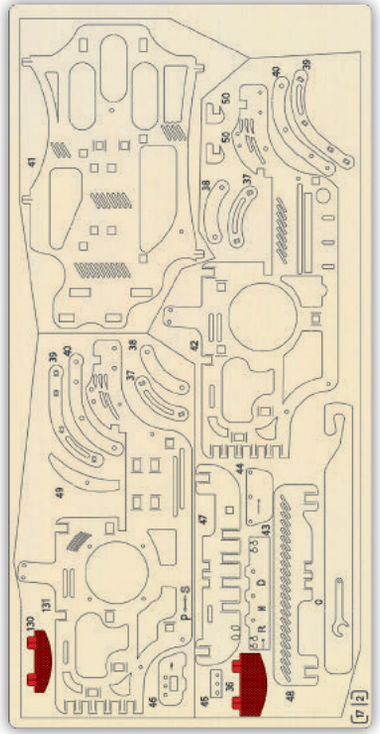

2

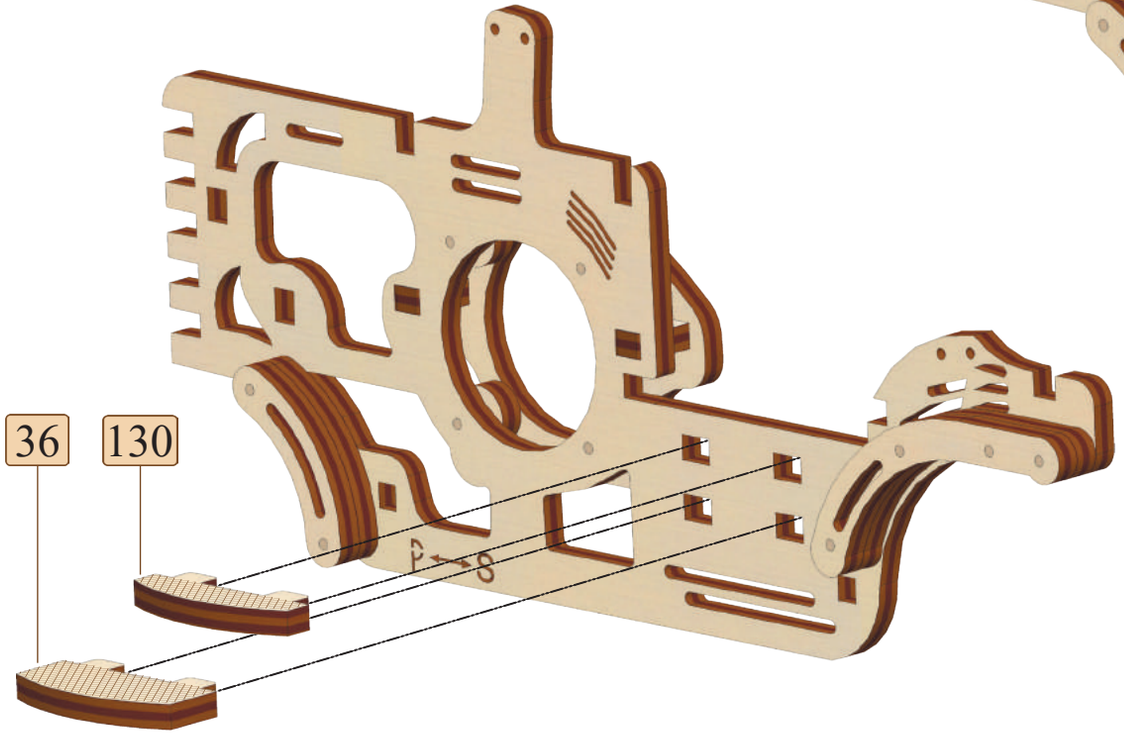

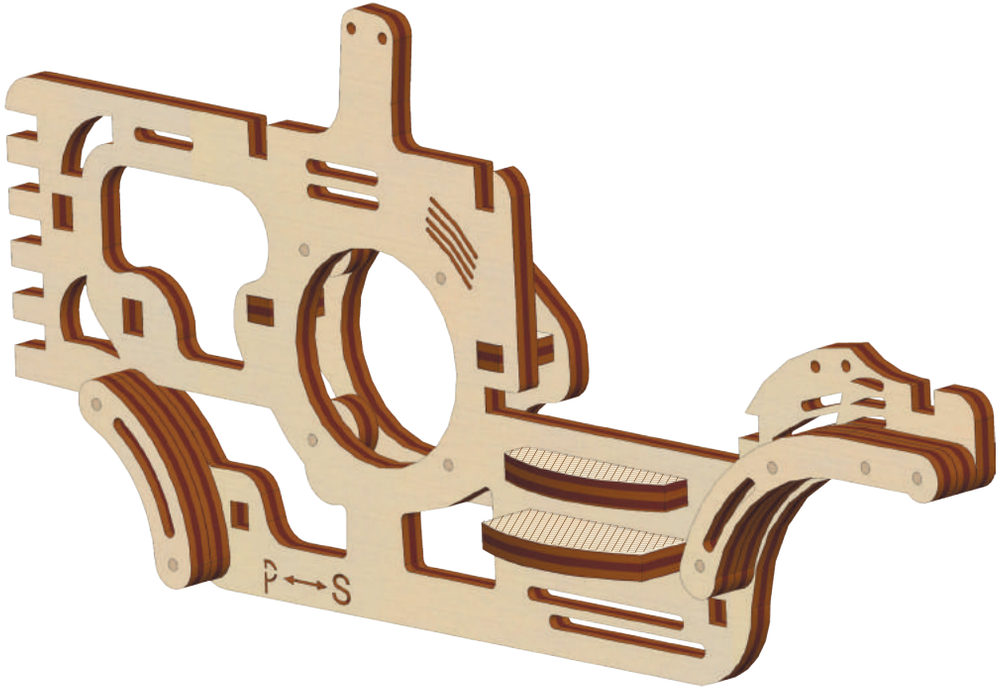

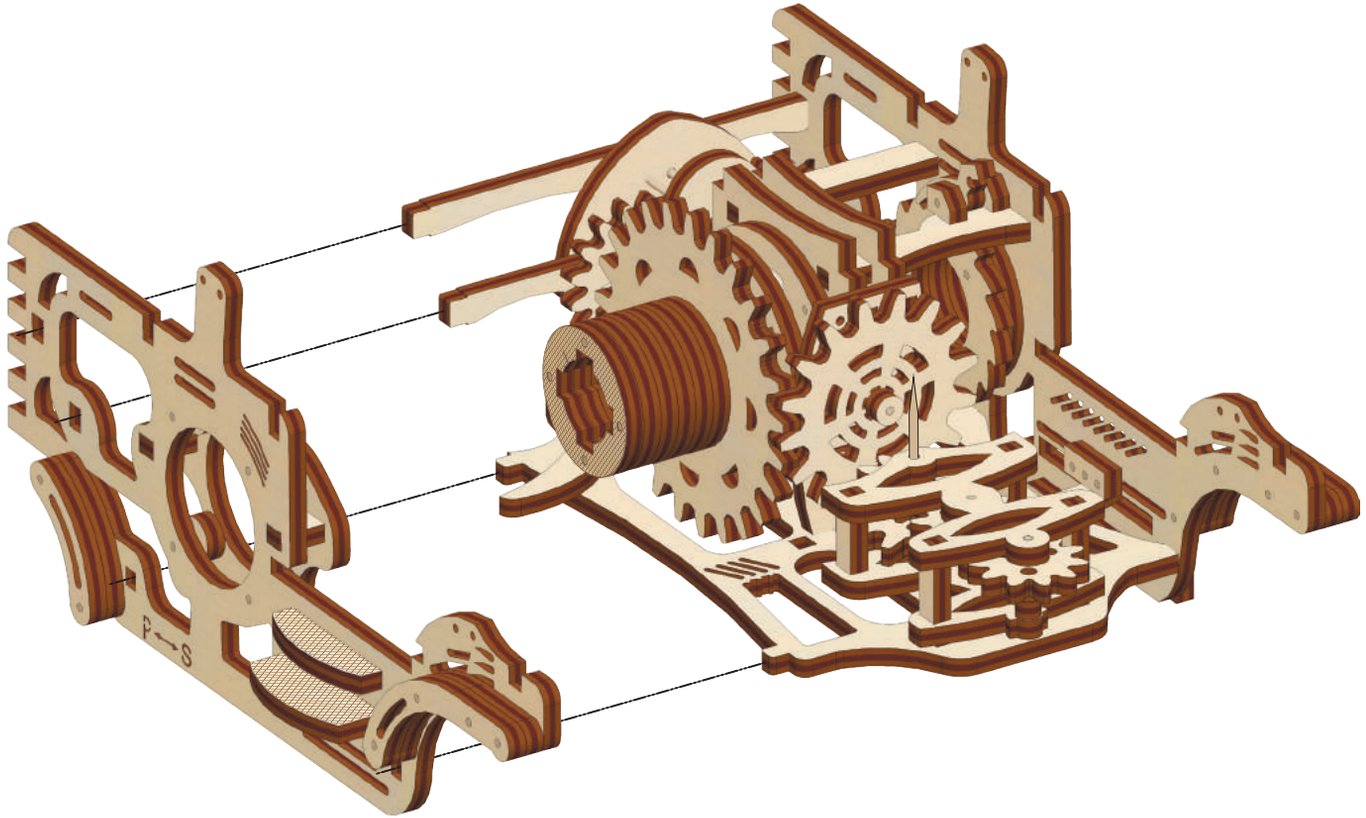
P
S

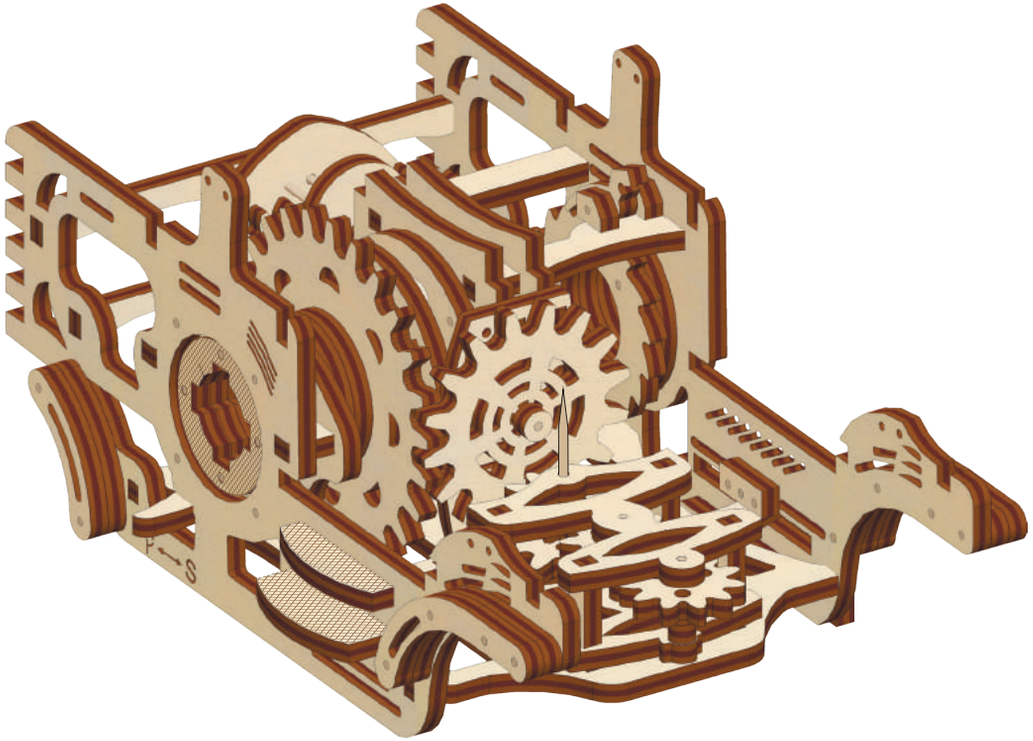
P
S

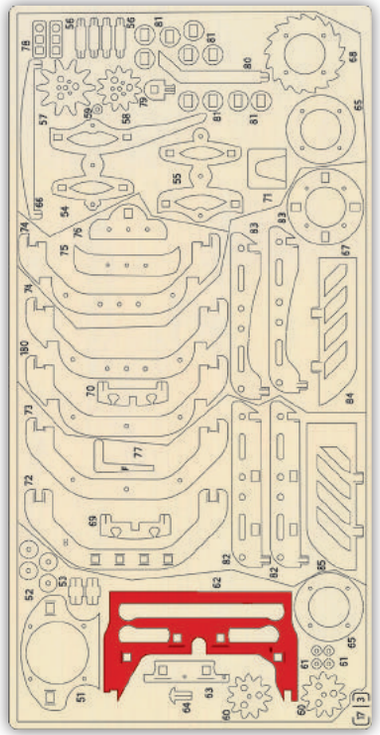

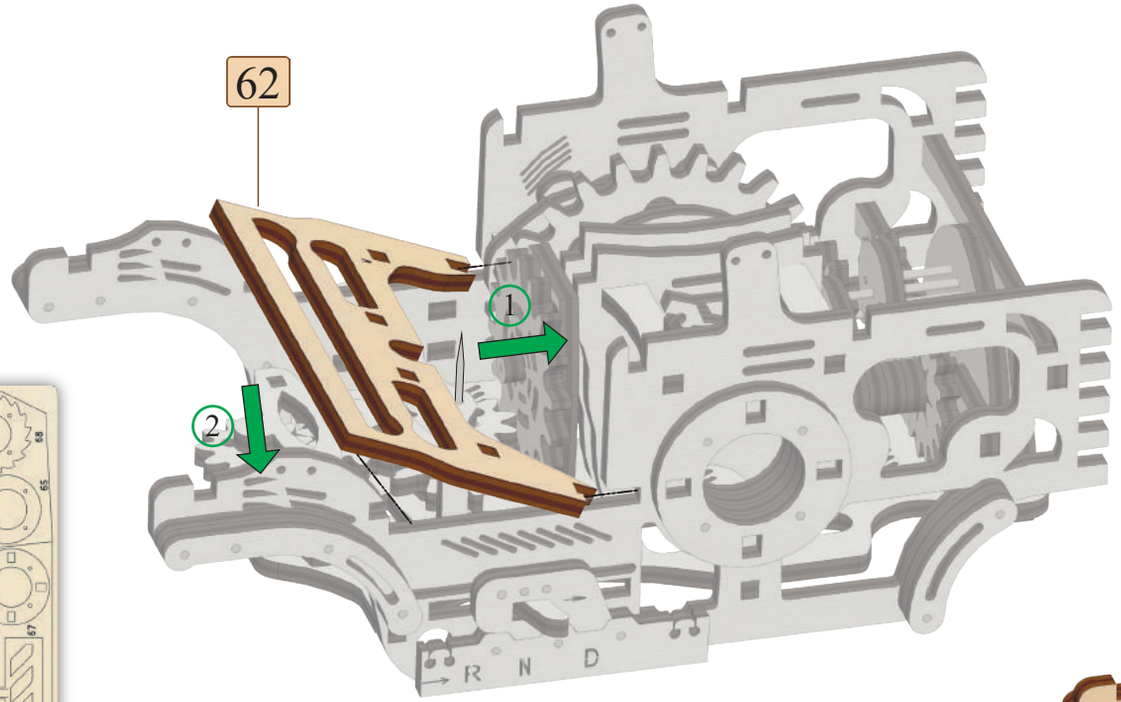
62
1
2
R N D

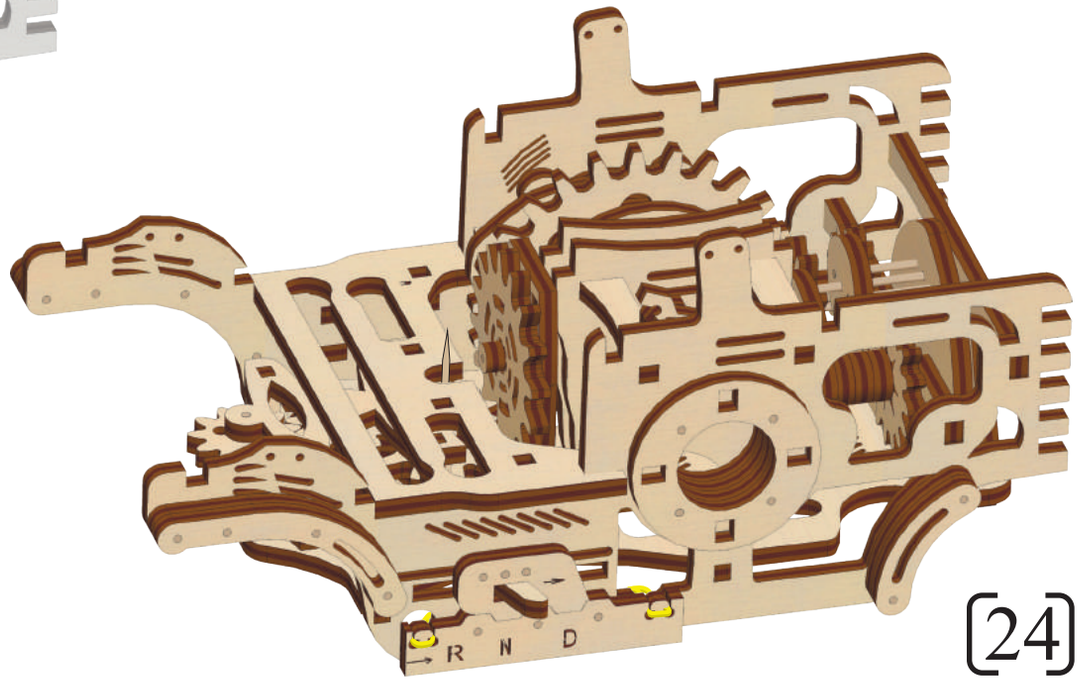
R N D

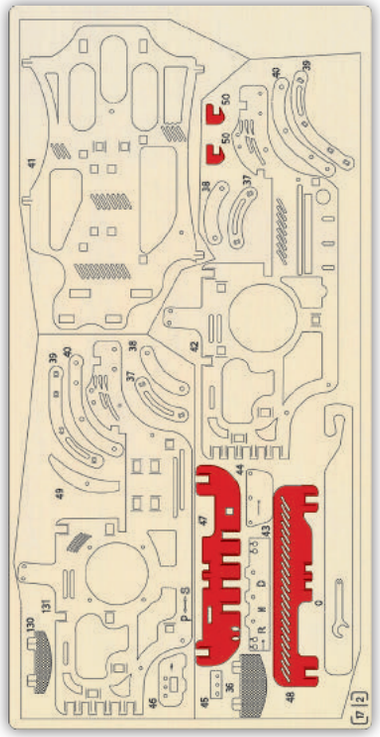

2

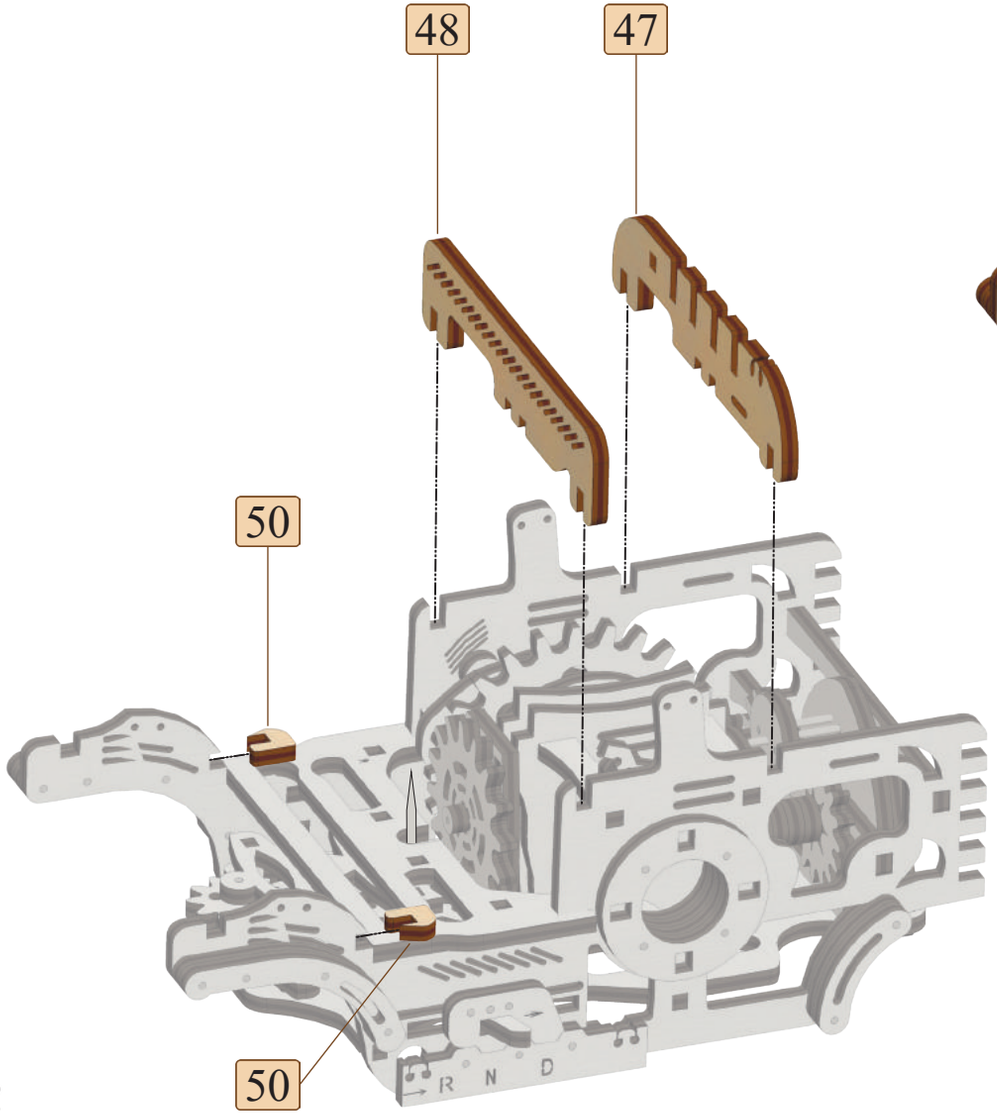

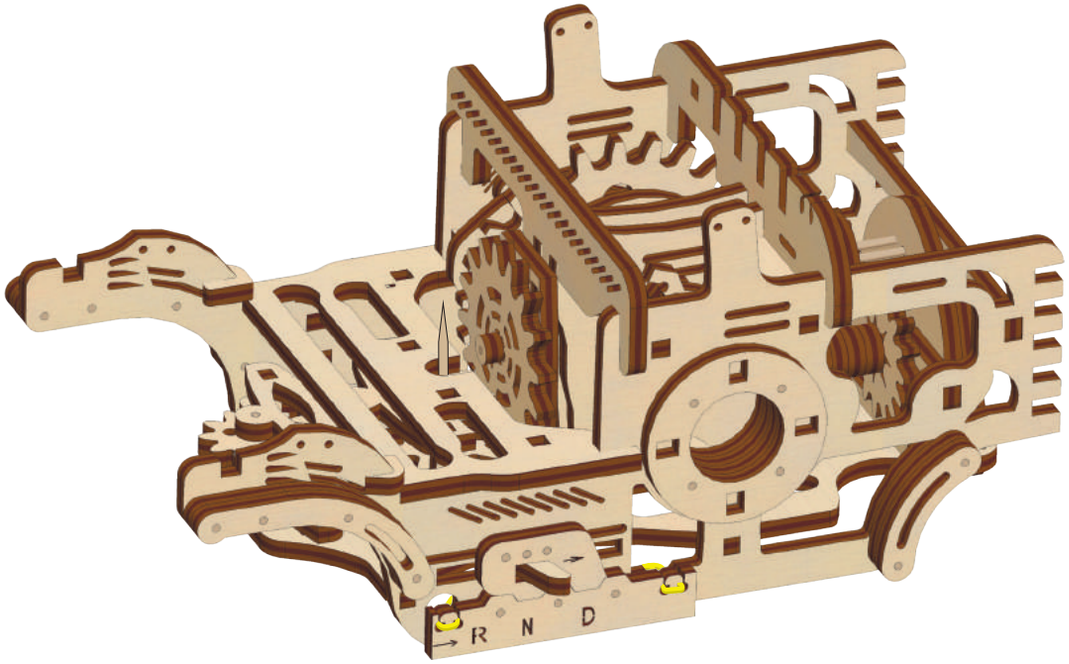

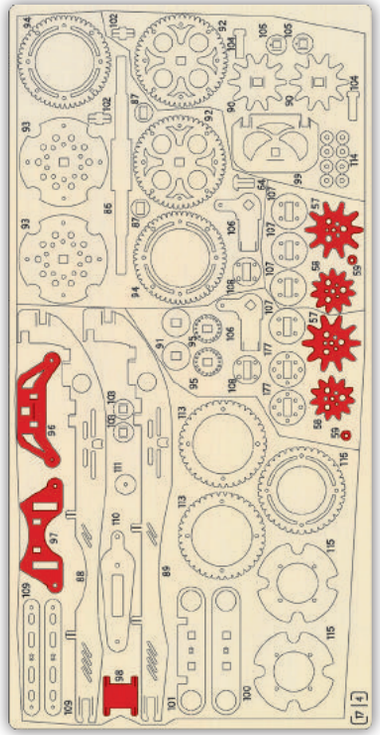

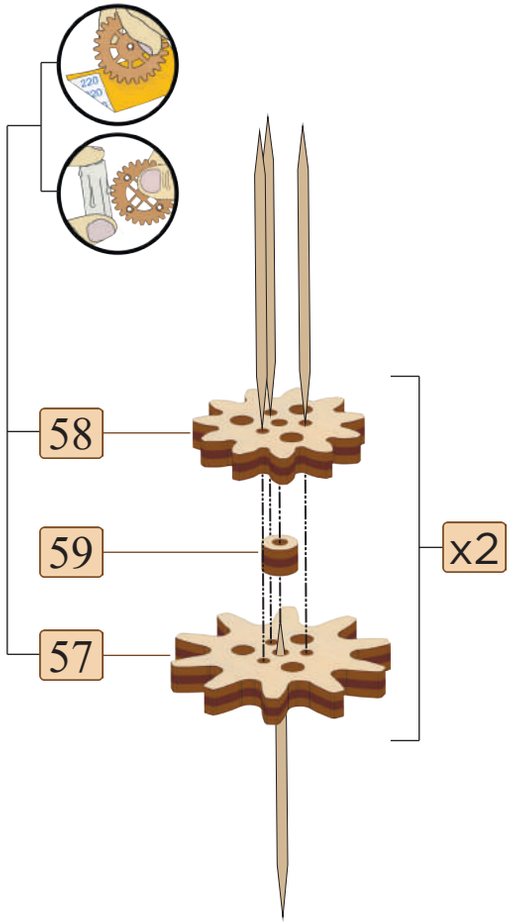
58
59
57
x2

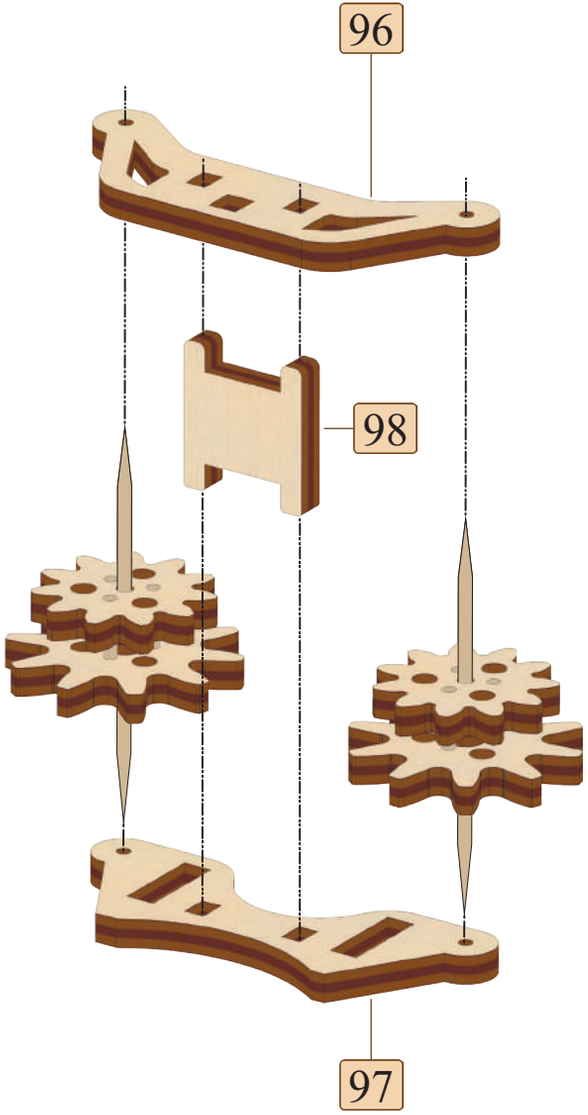
96
98
97

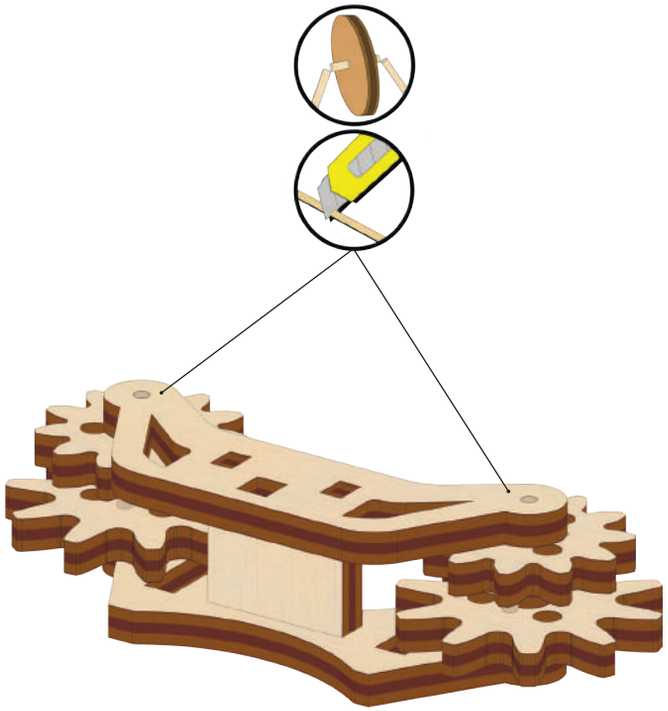

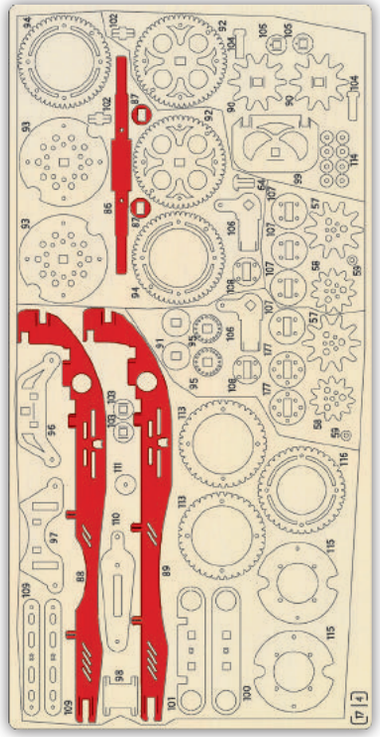

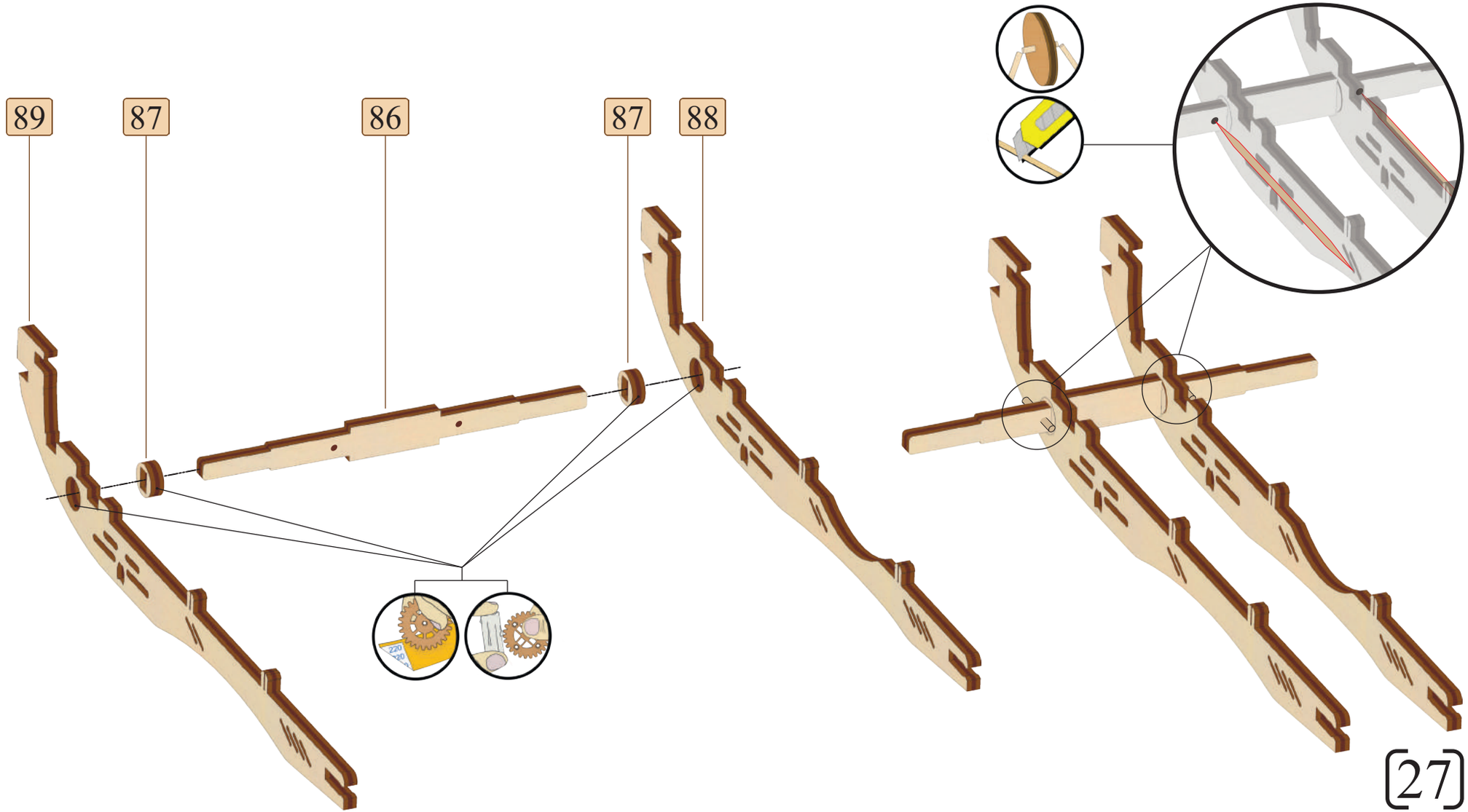
89
87
86
87
88
220
20

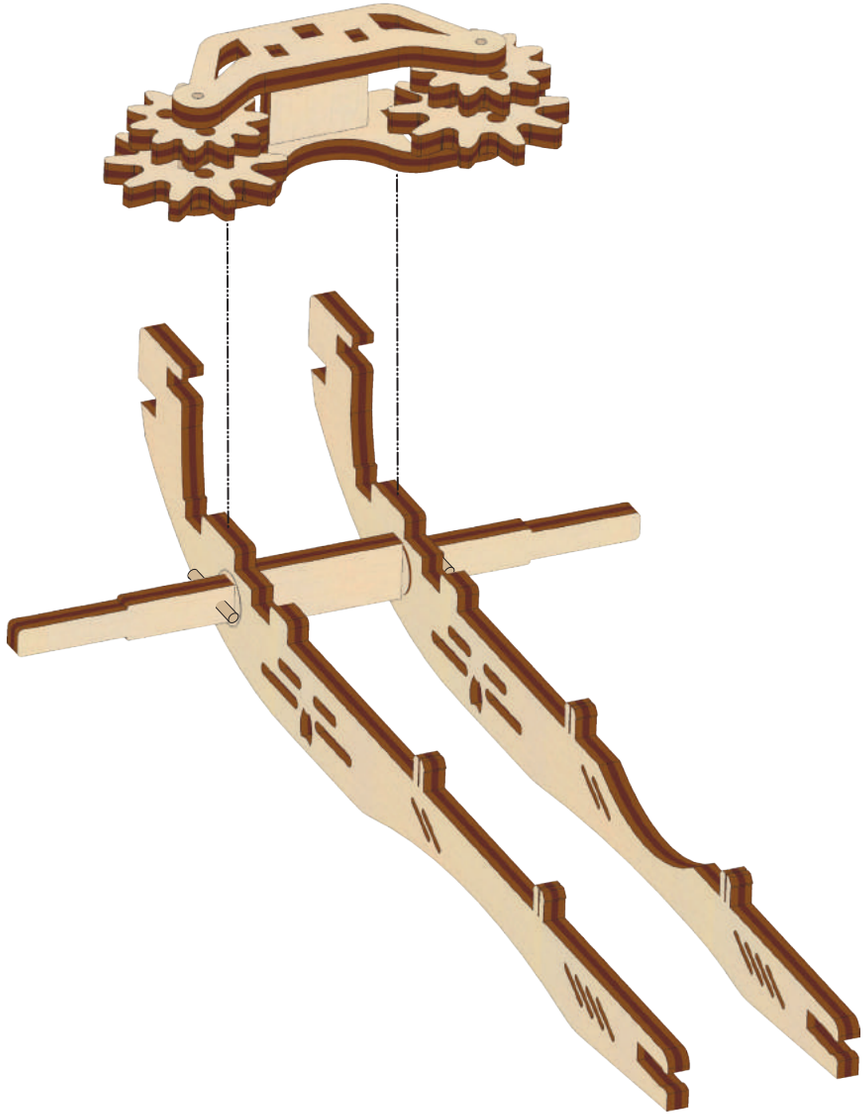

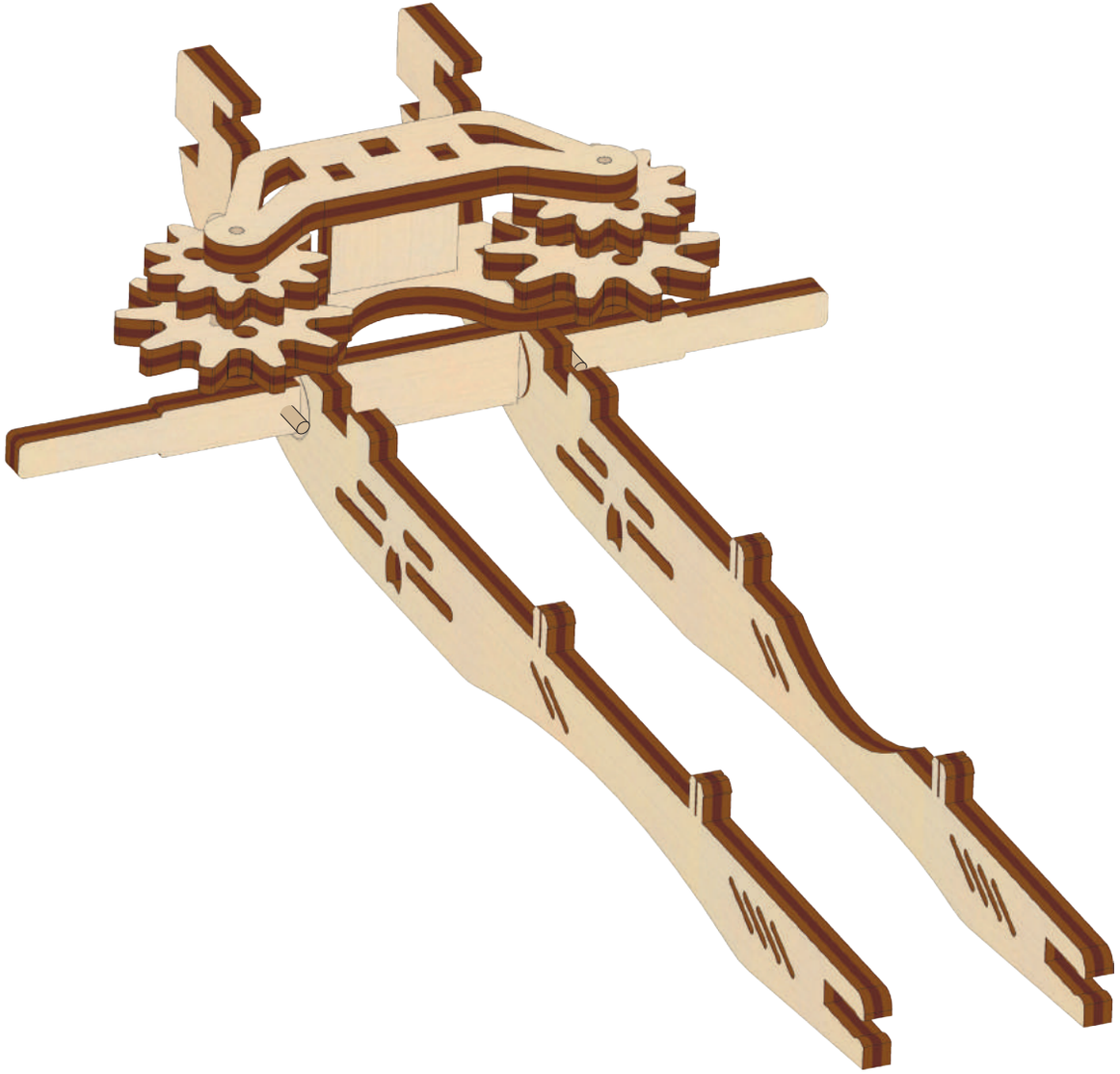

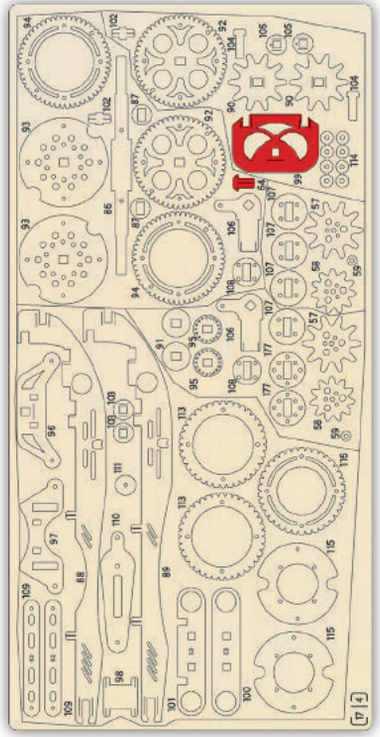

4

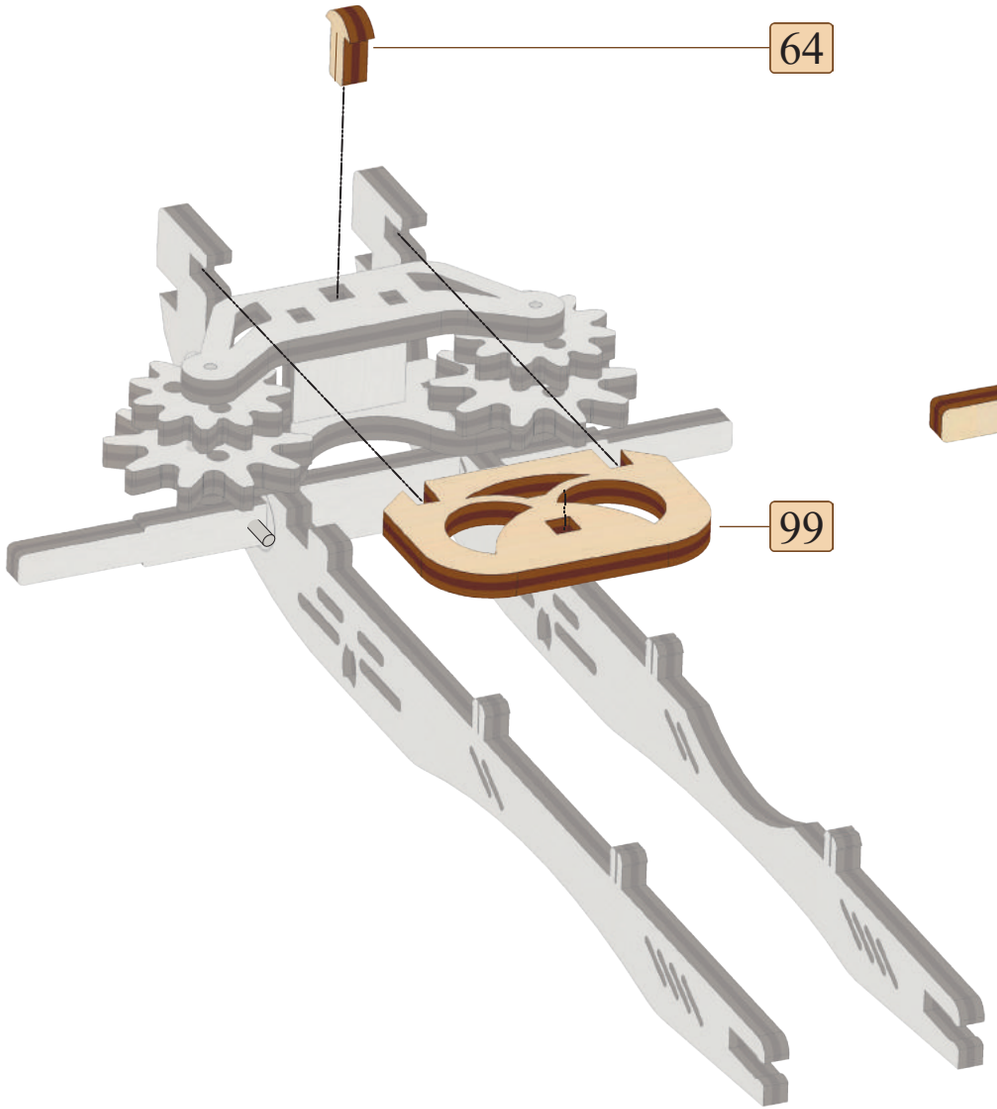

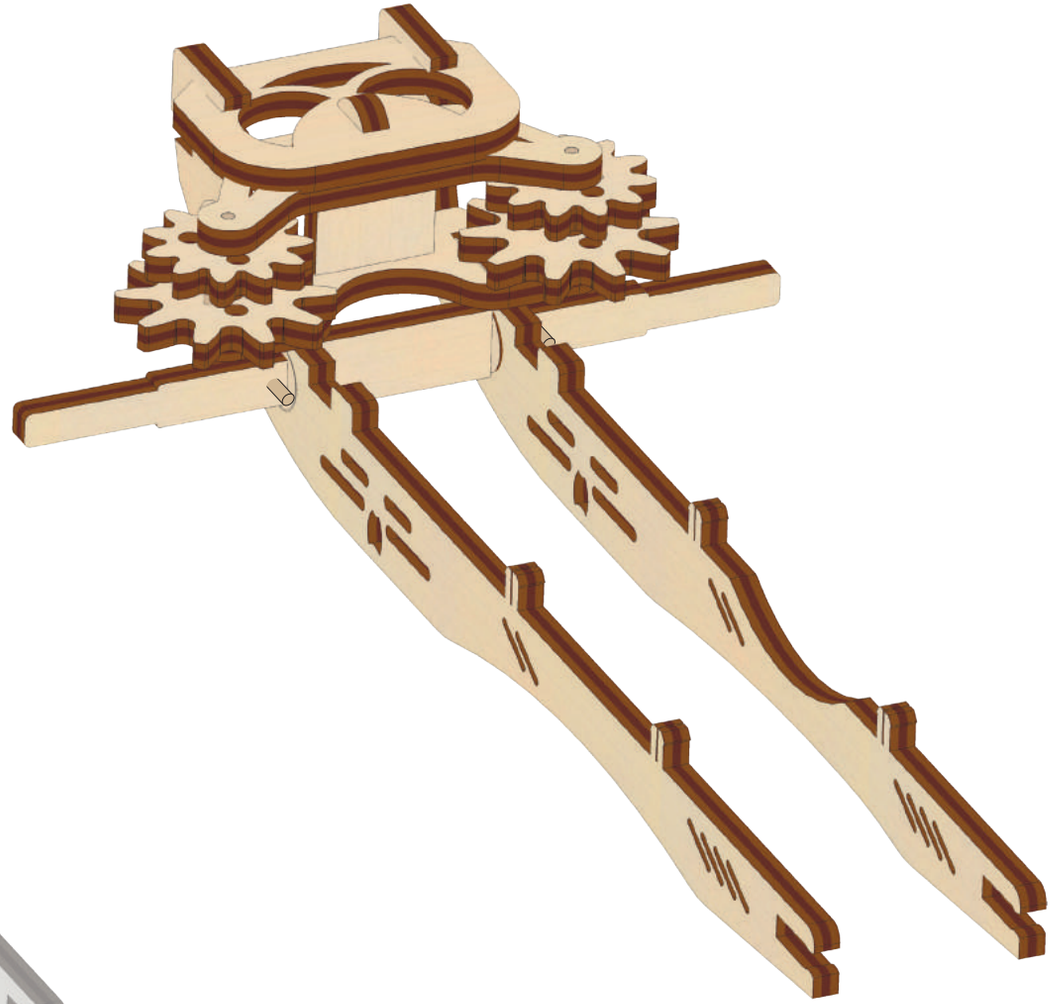

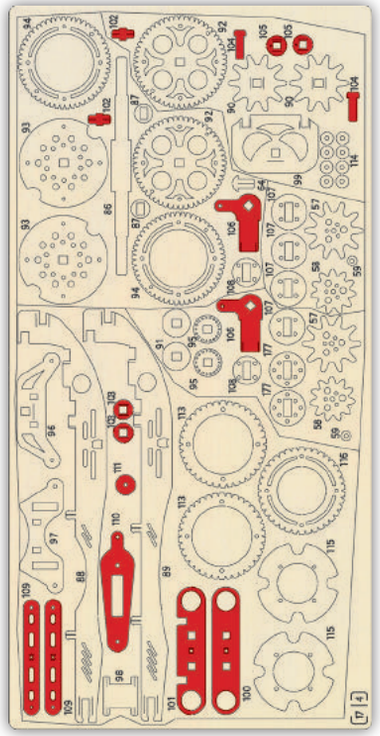

4

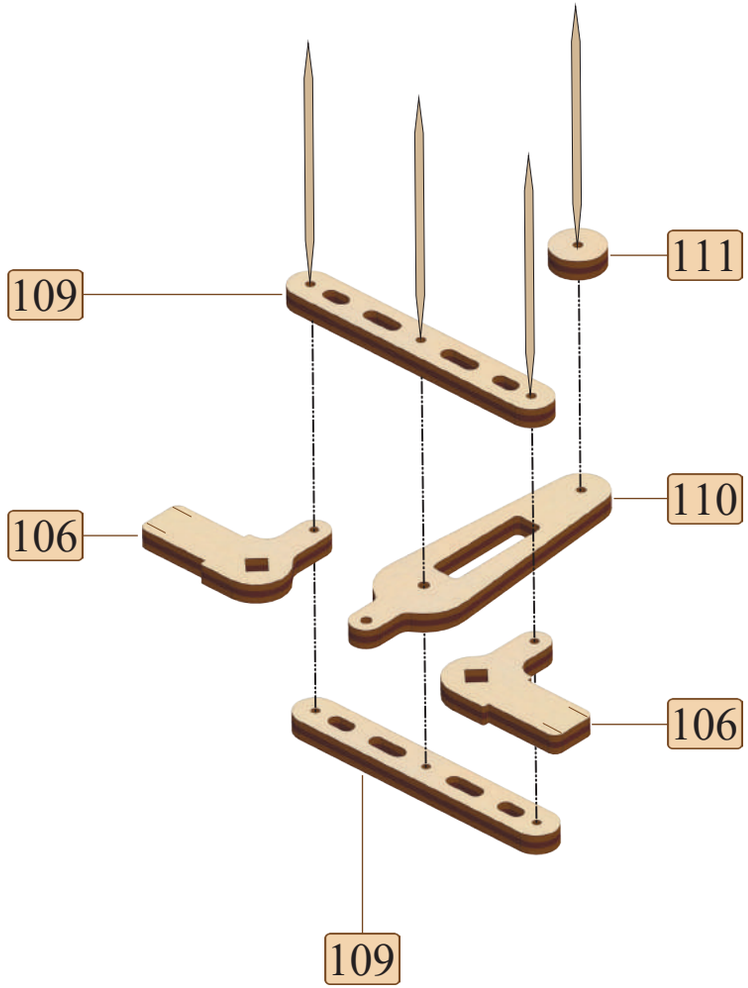

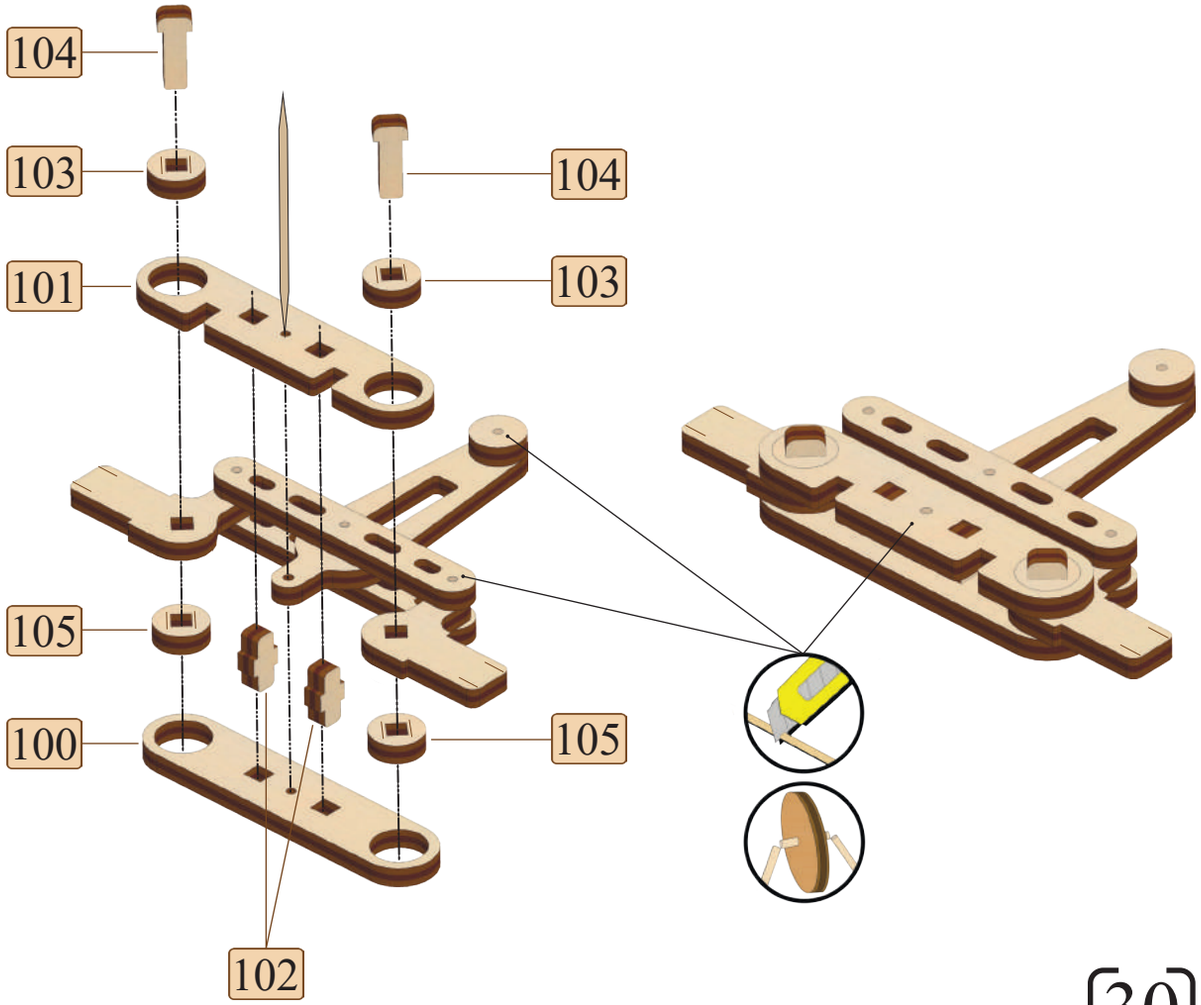

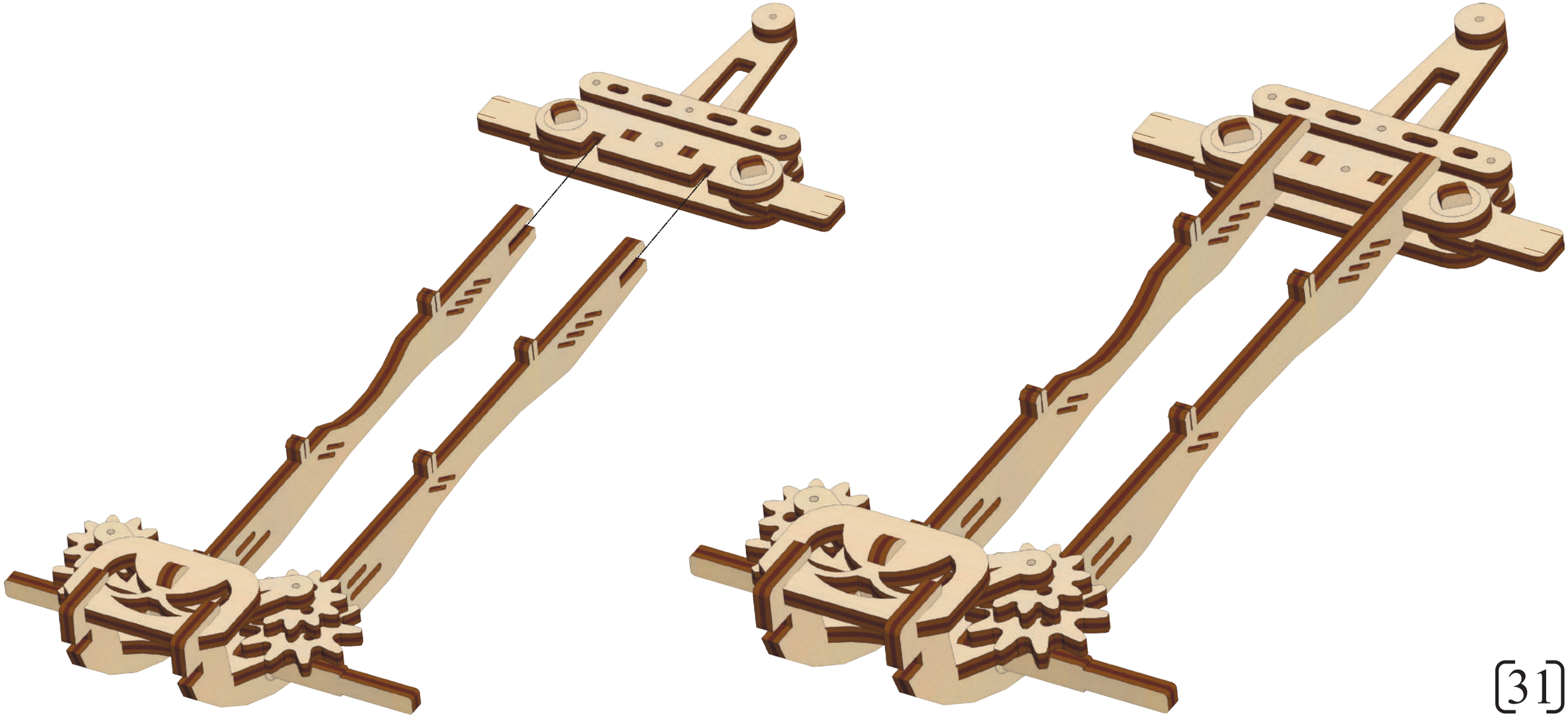

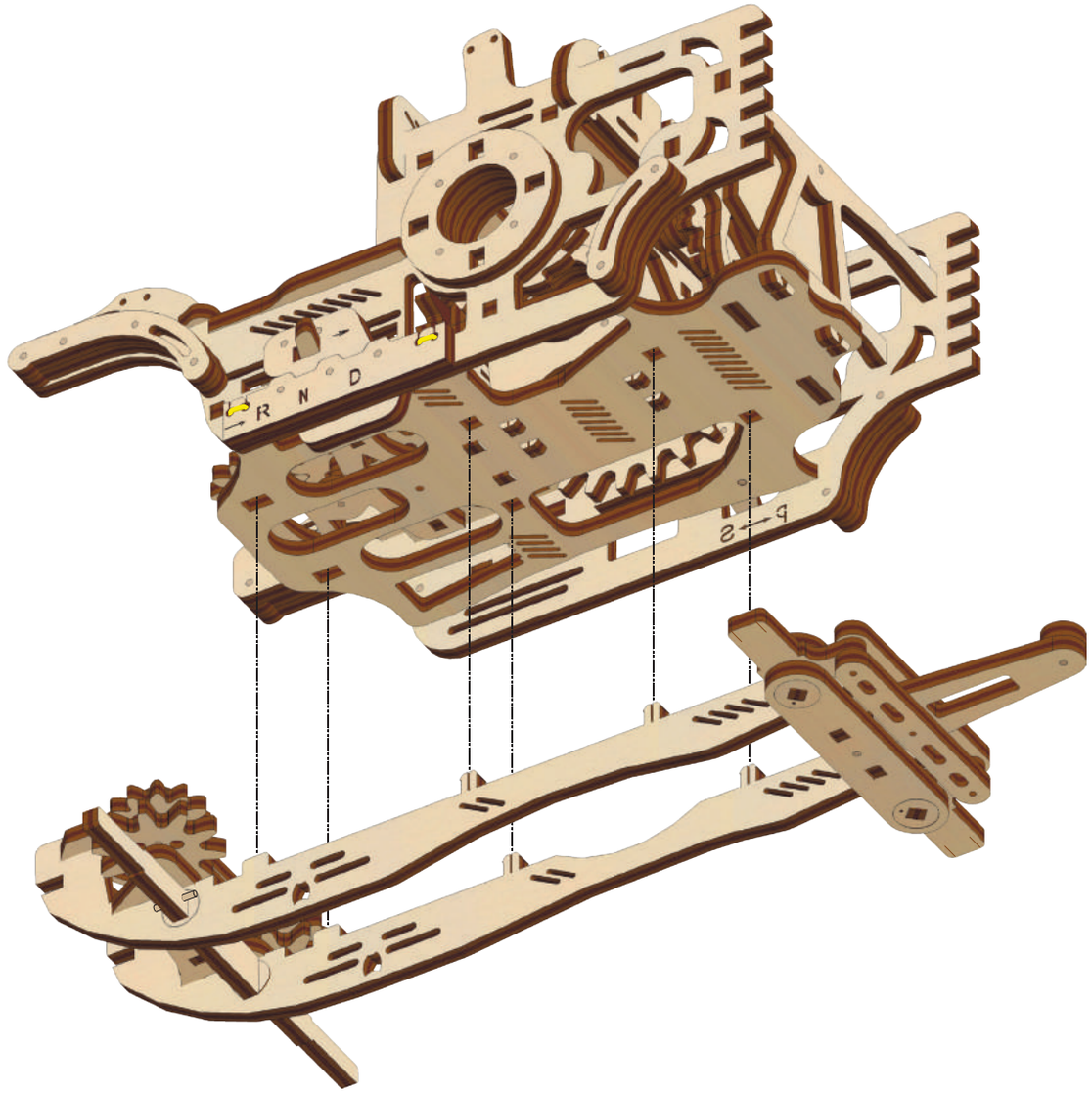
R N D
P S

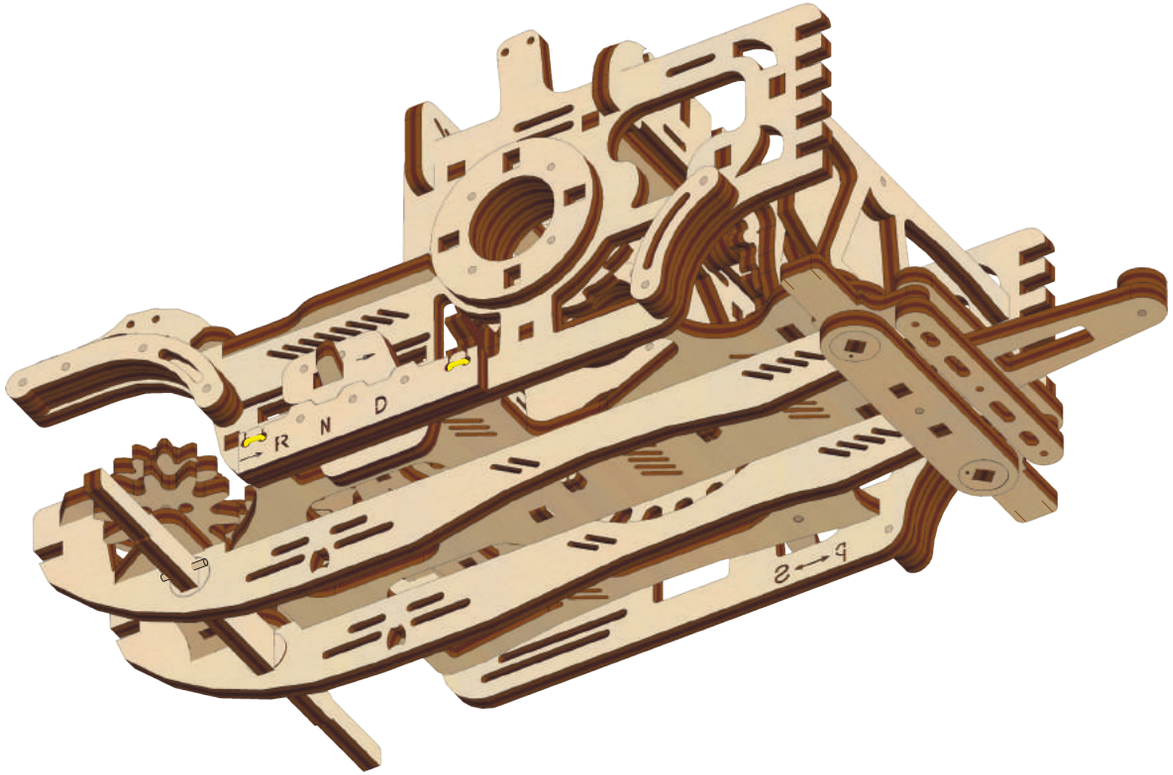
R N D
P S

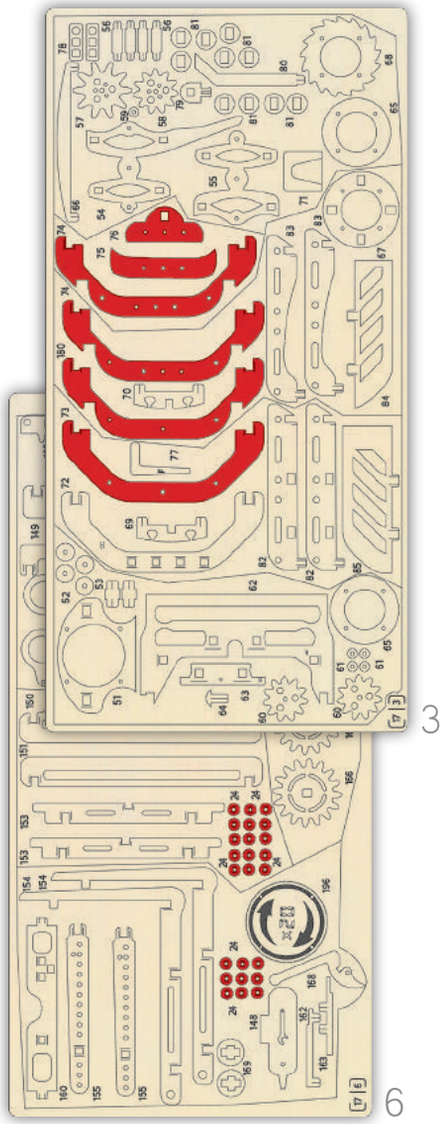
3
6

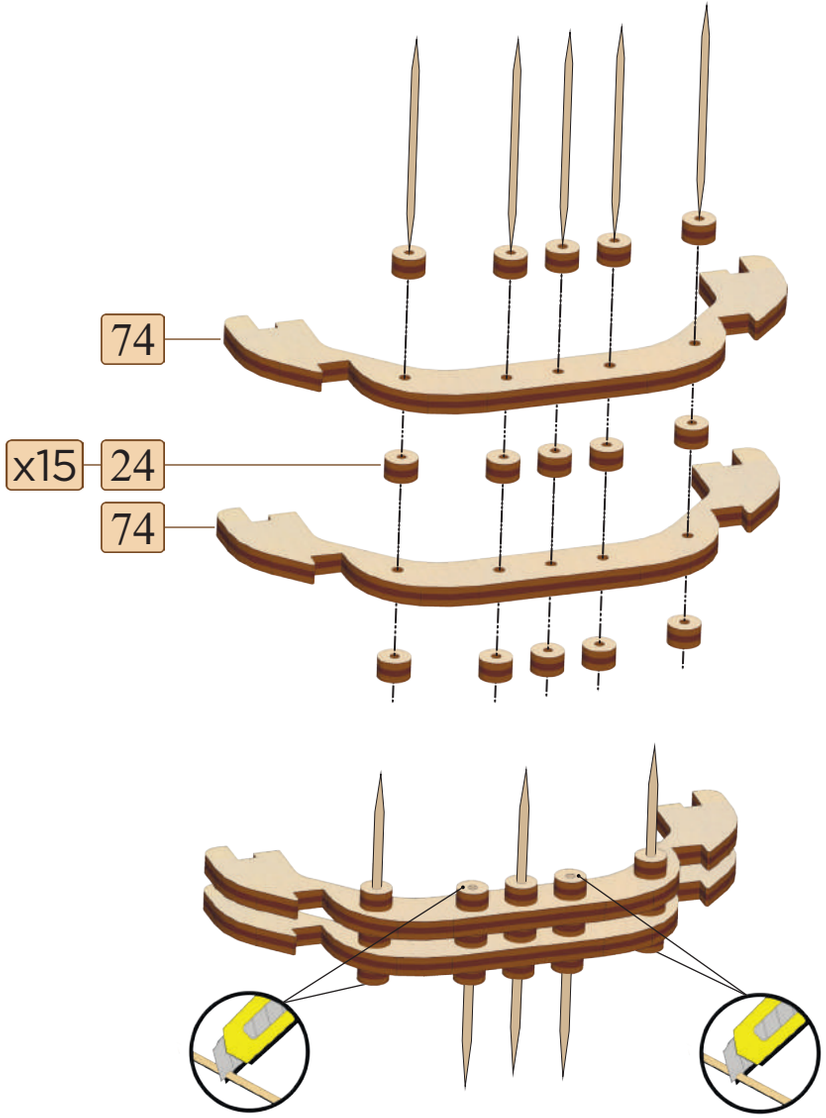
74
x15
24
74

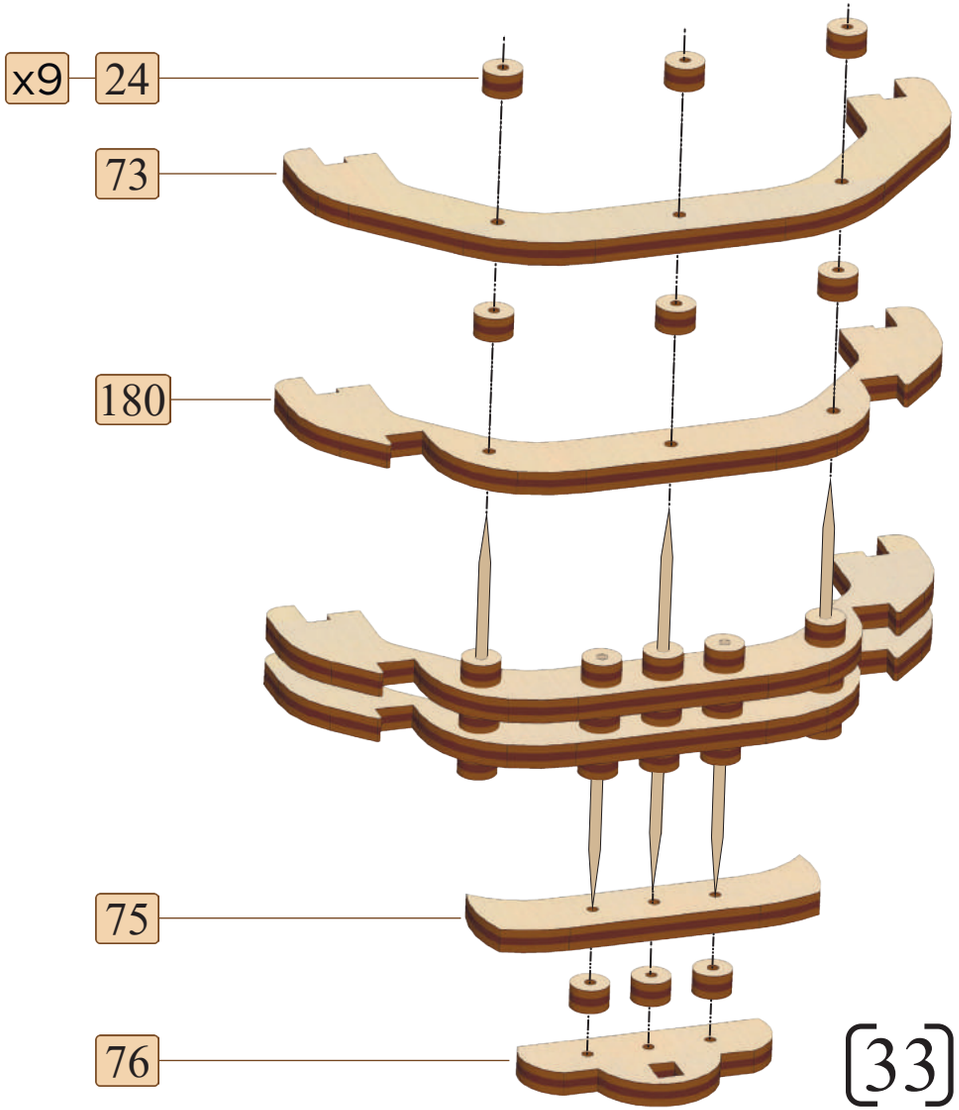
x9
24
73
180
75
76

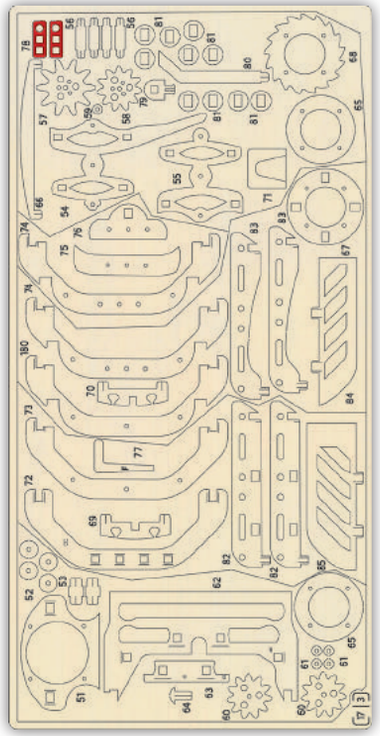

3

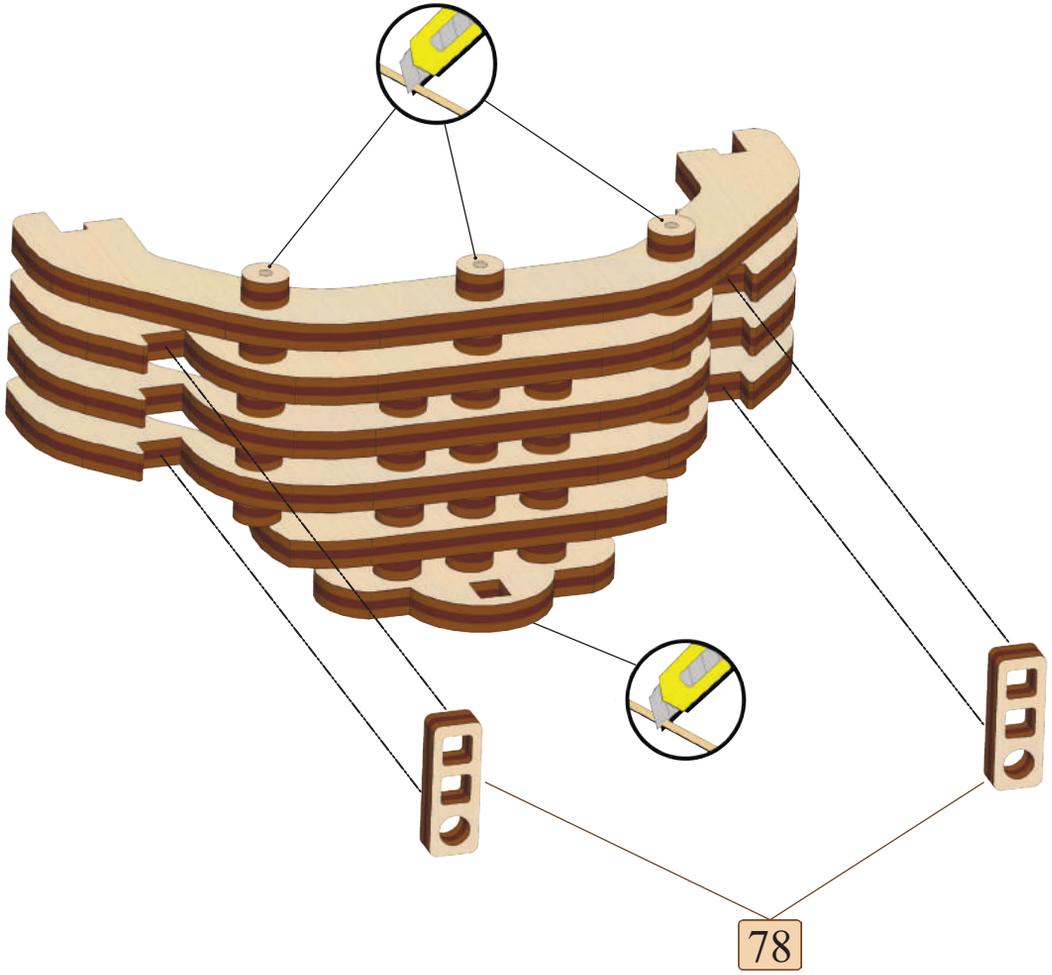

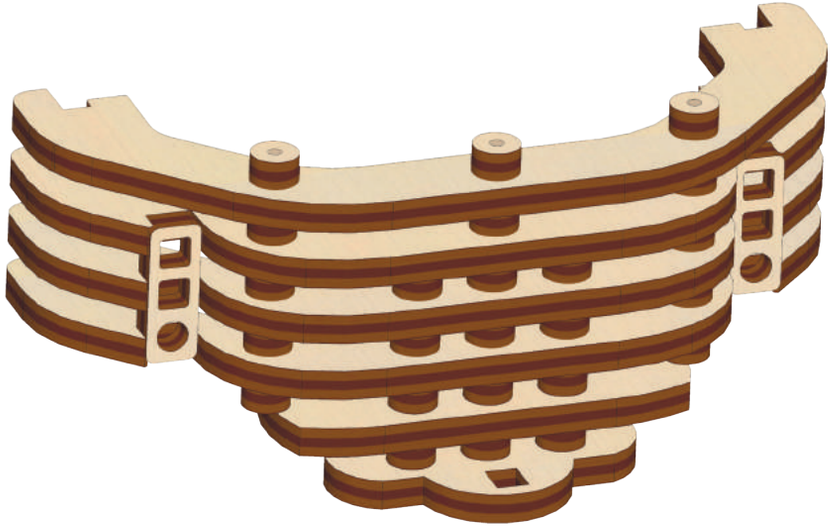

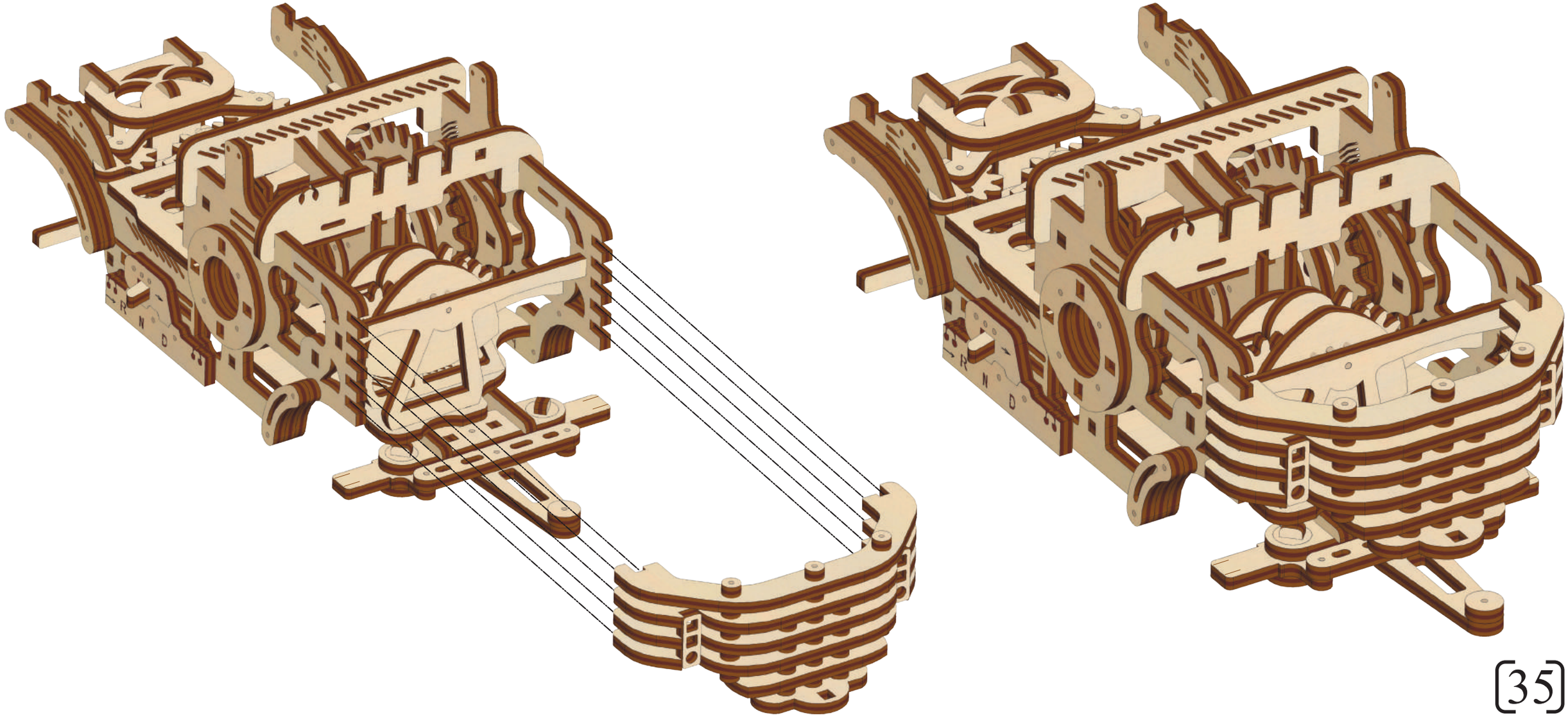
R
N
D
R
N
D

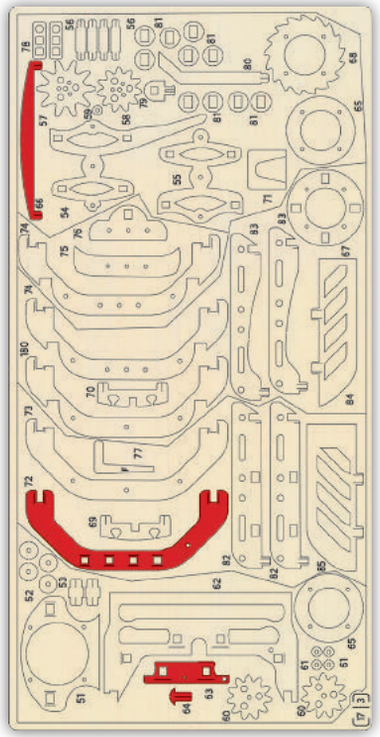

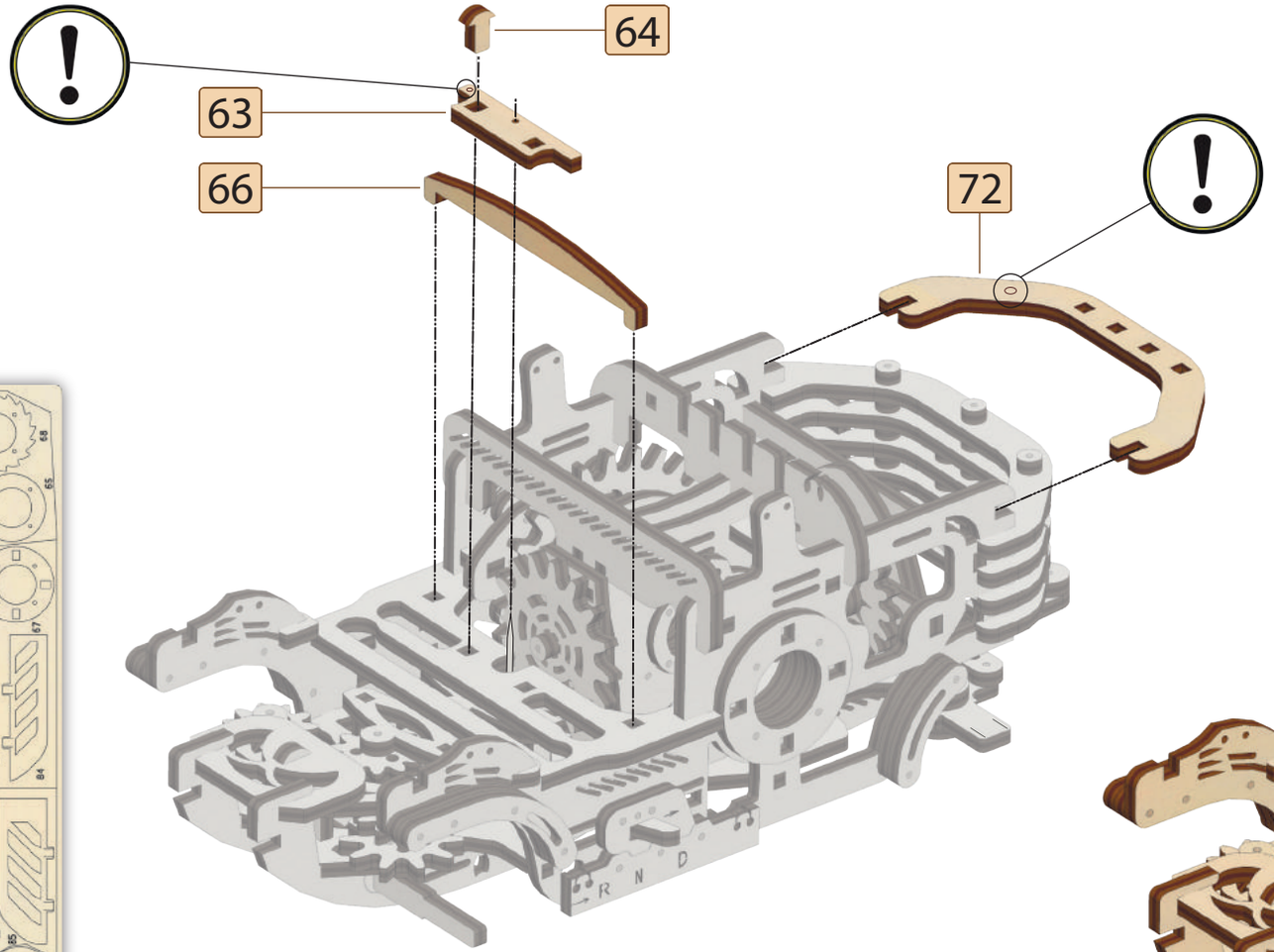
64
63
66
72
R
N
D

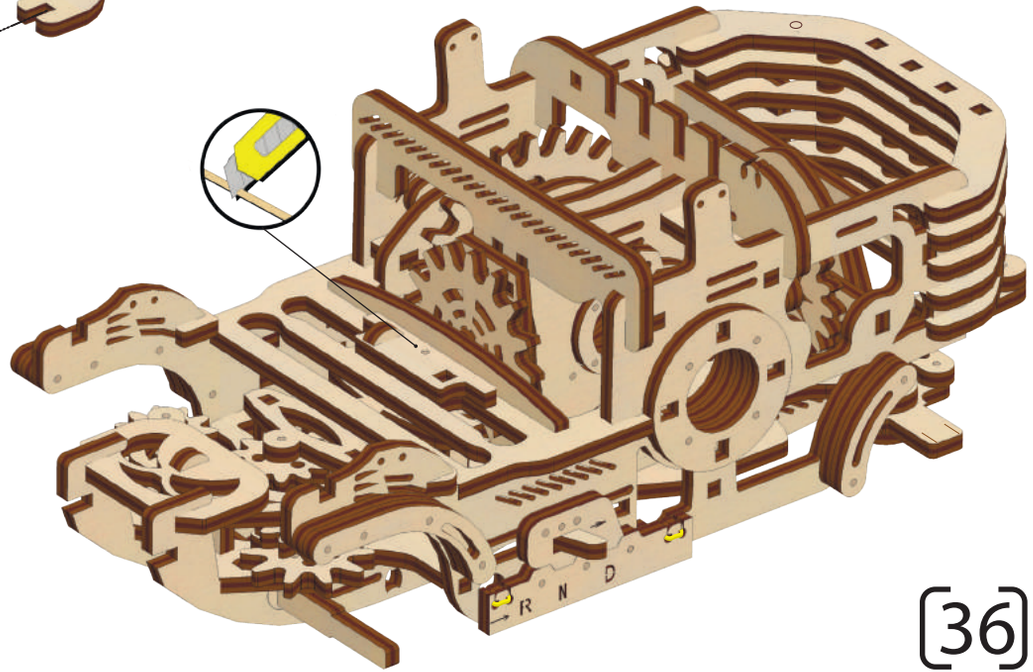
R
N
D

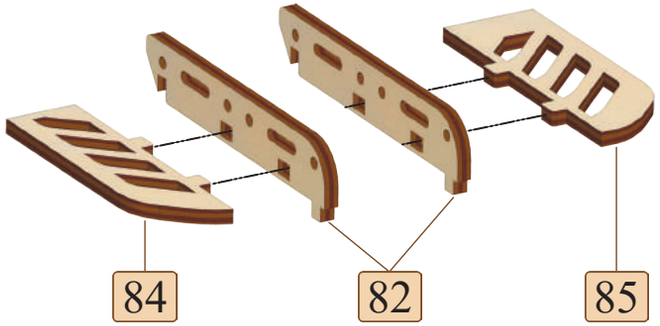
84
82
85

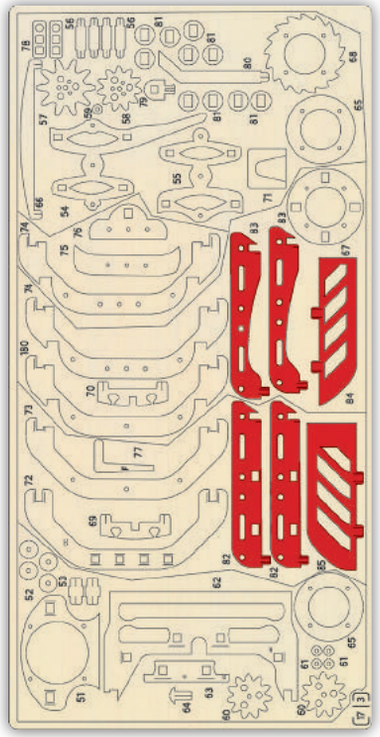

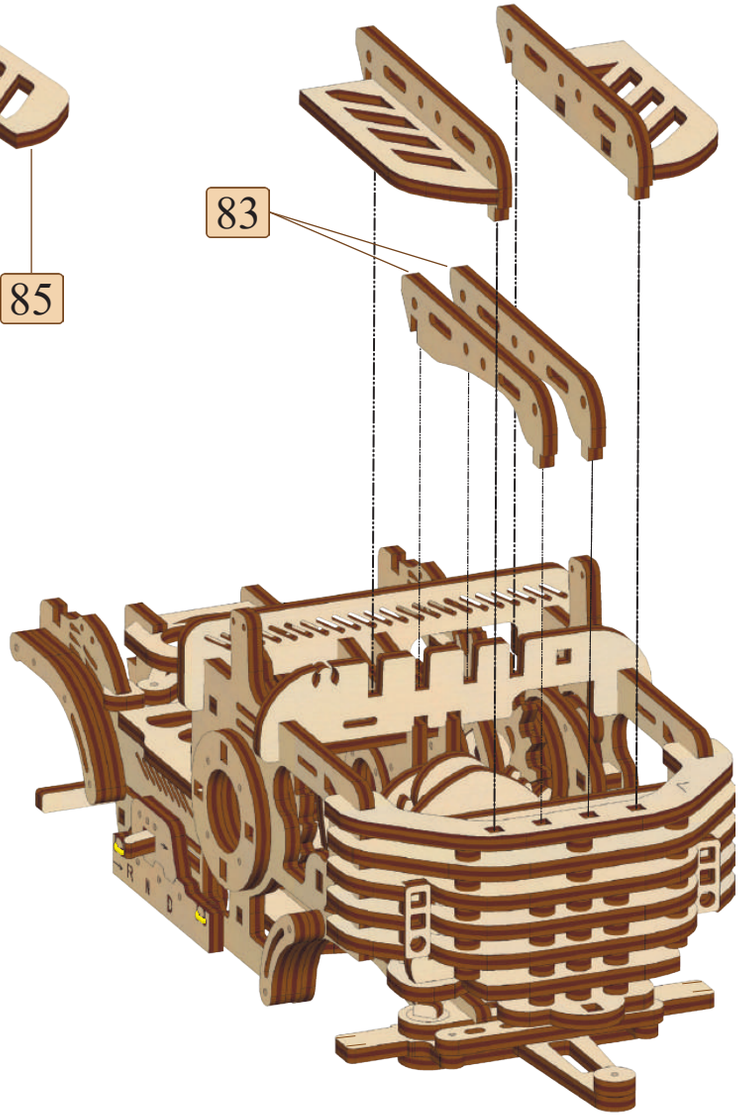
83

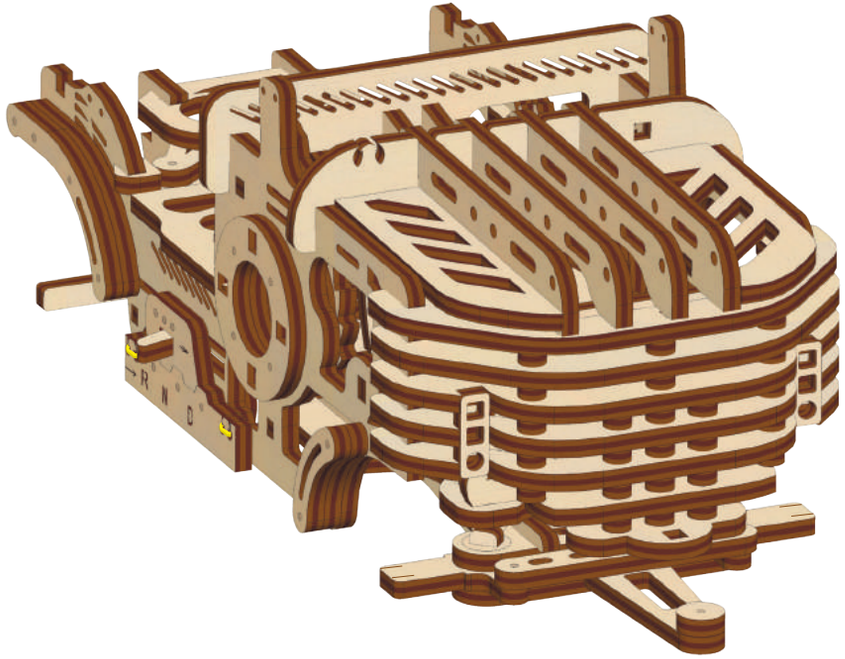

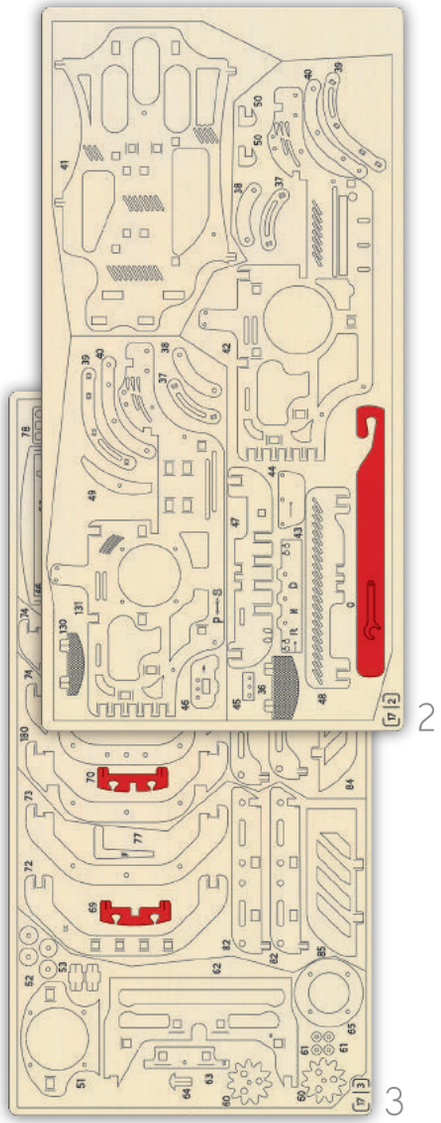
2
3

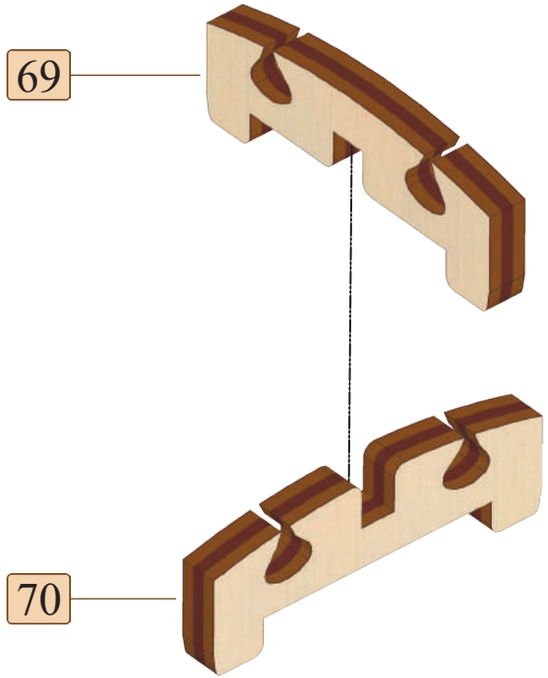
69
70

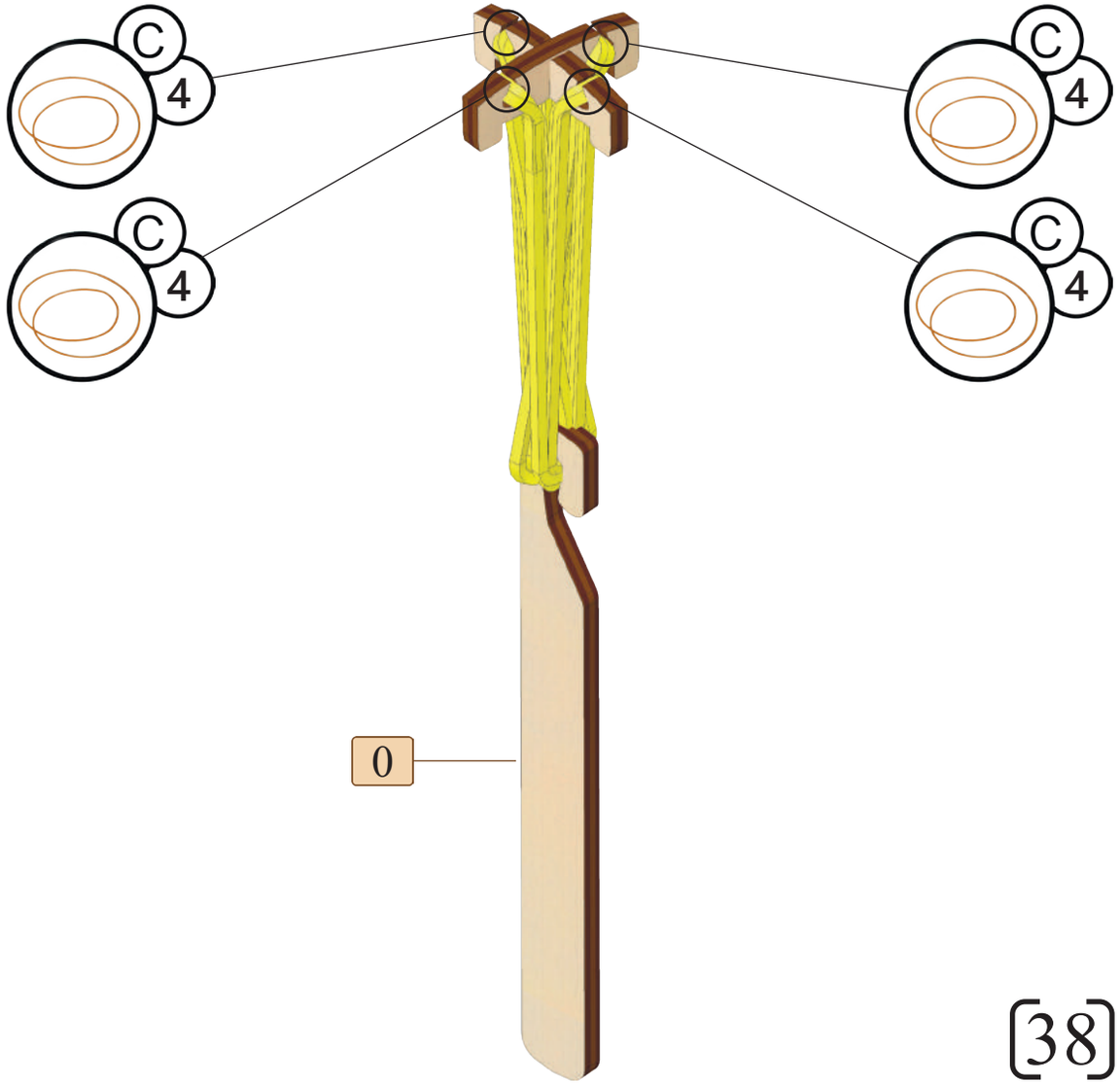
C
4
C
4
C
4
C
4
0

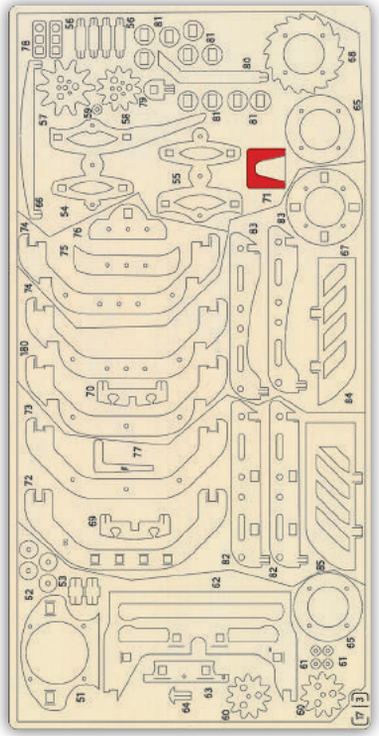

3

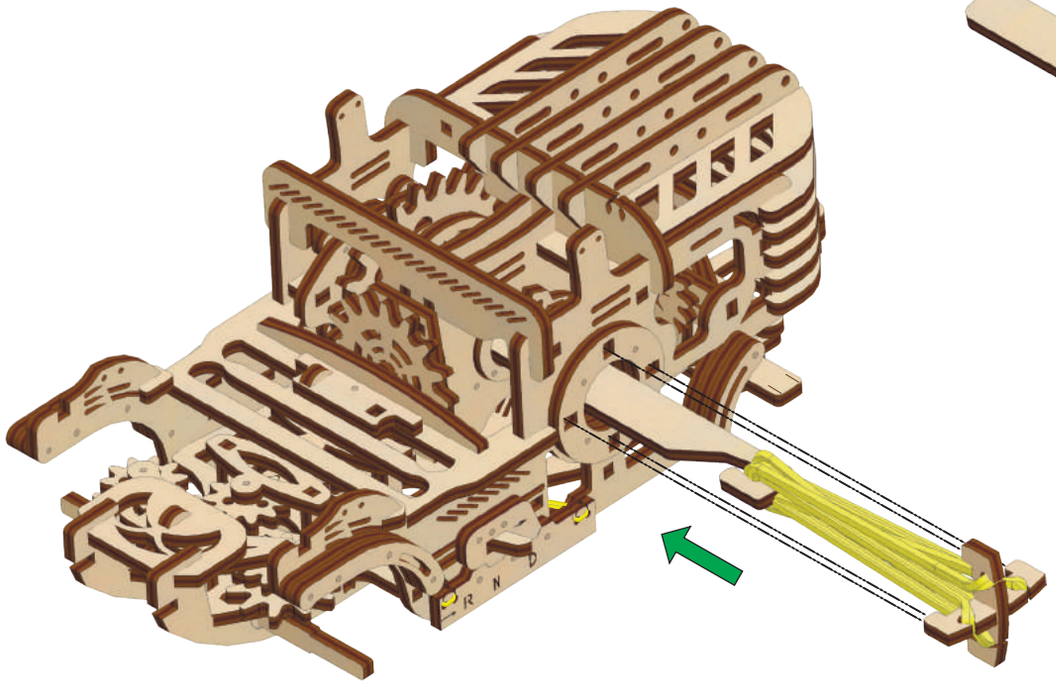

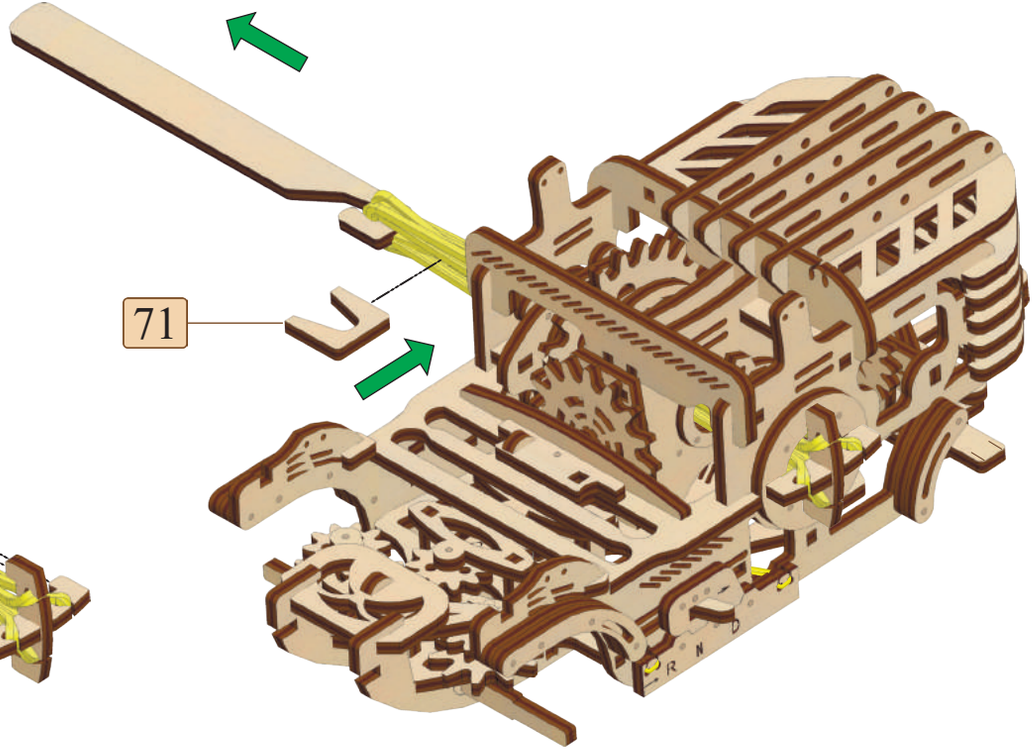

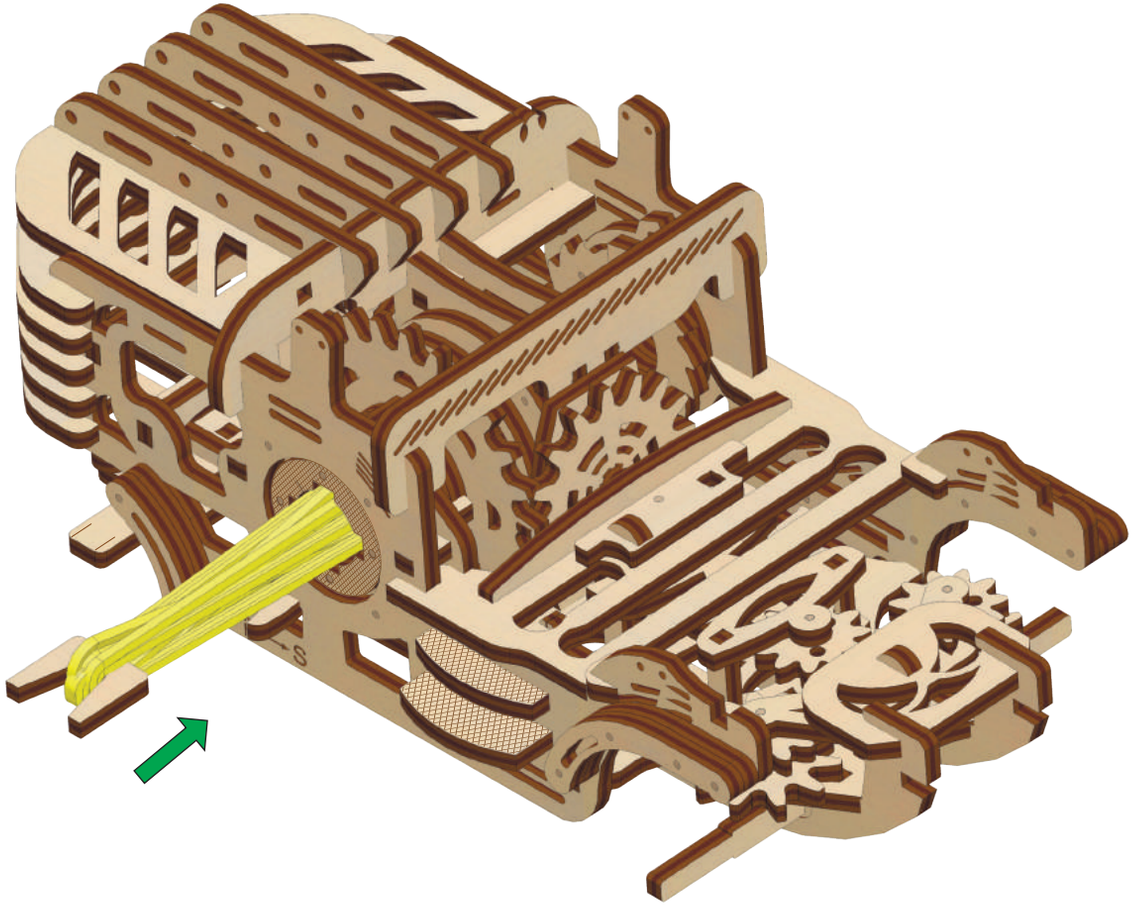

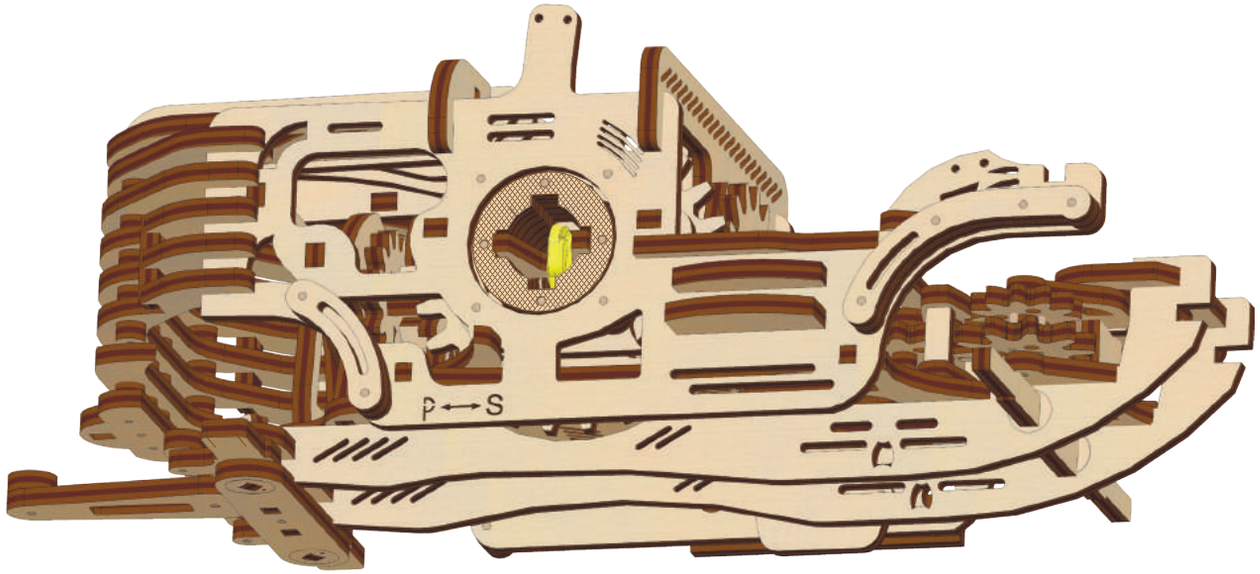
P ⟷ S

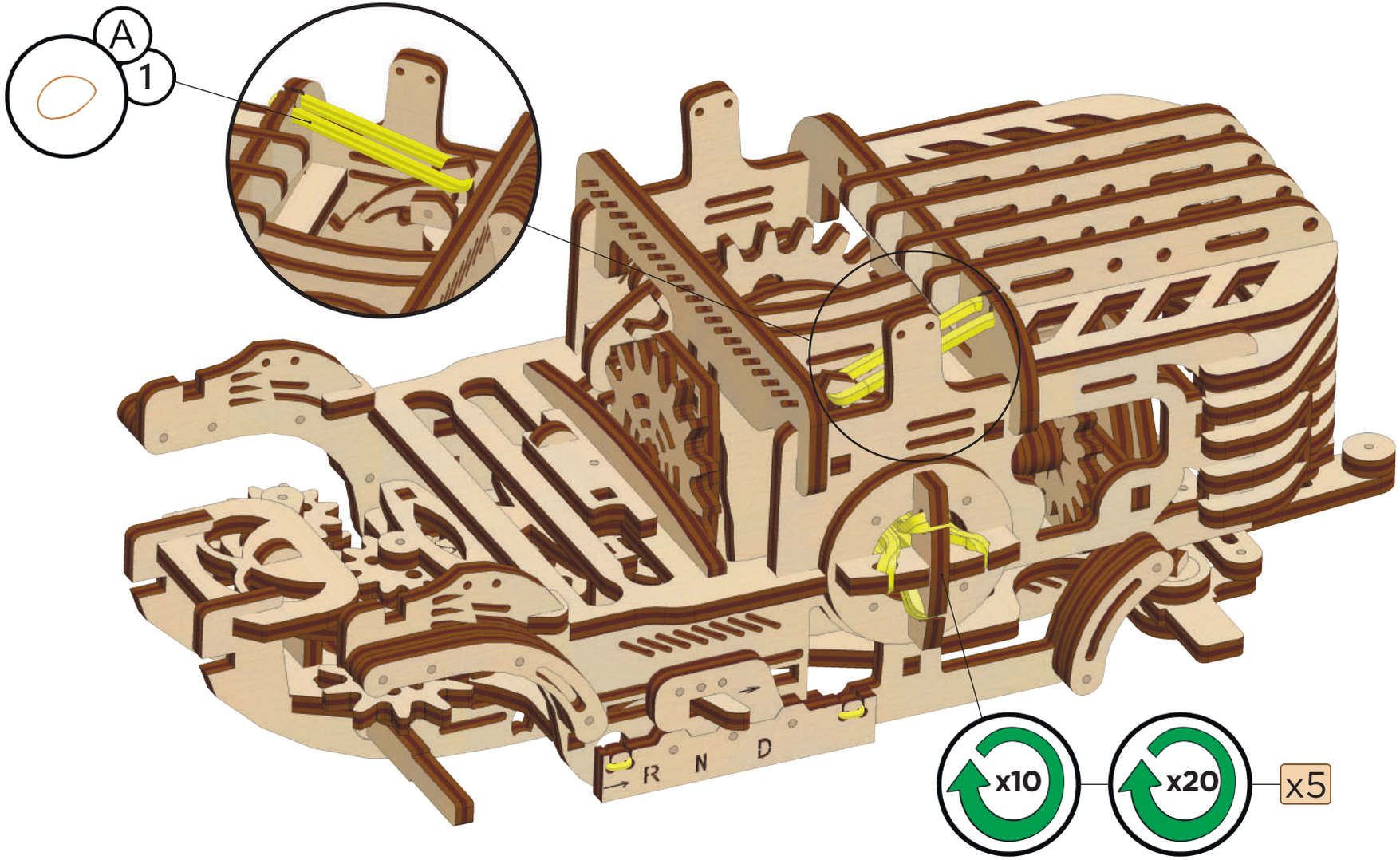
A
1
R
N
D
x10
x20
x5

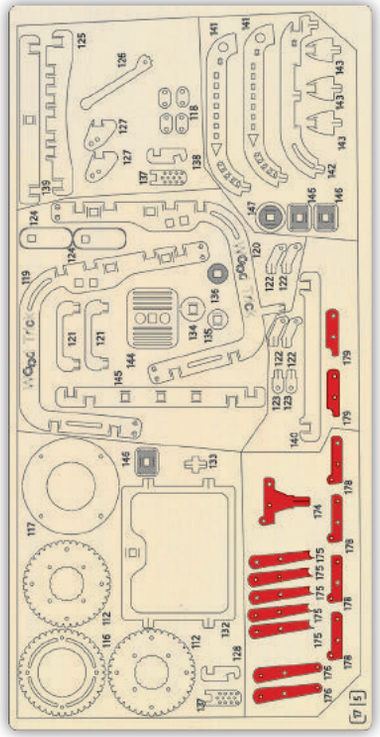

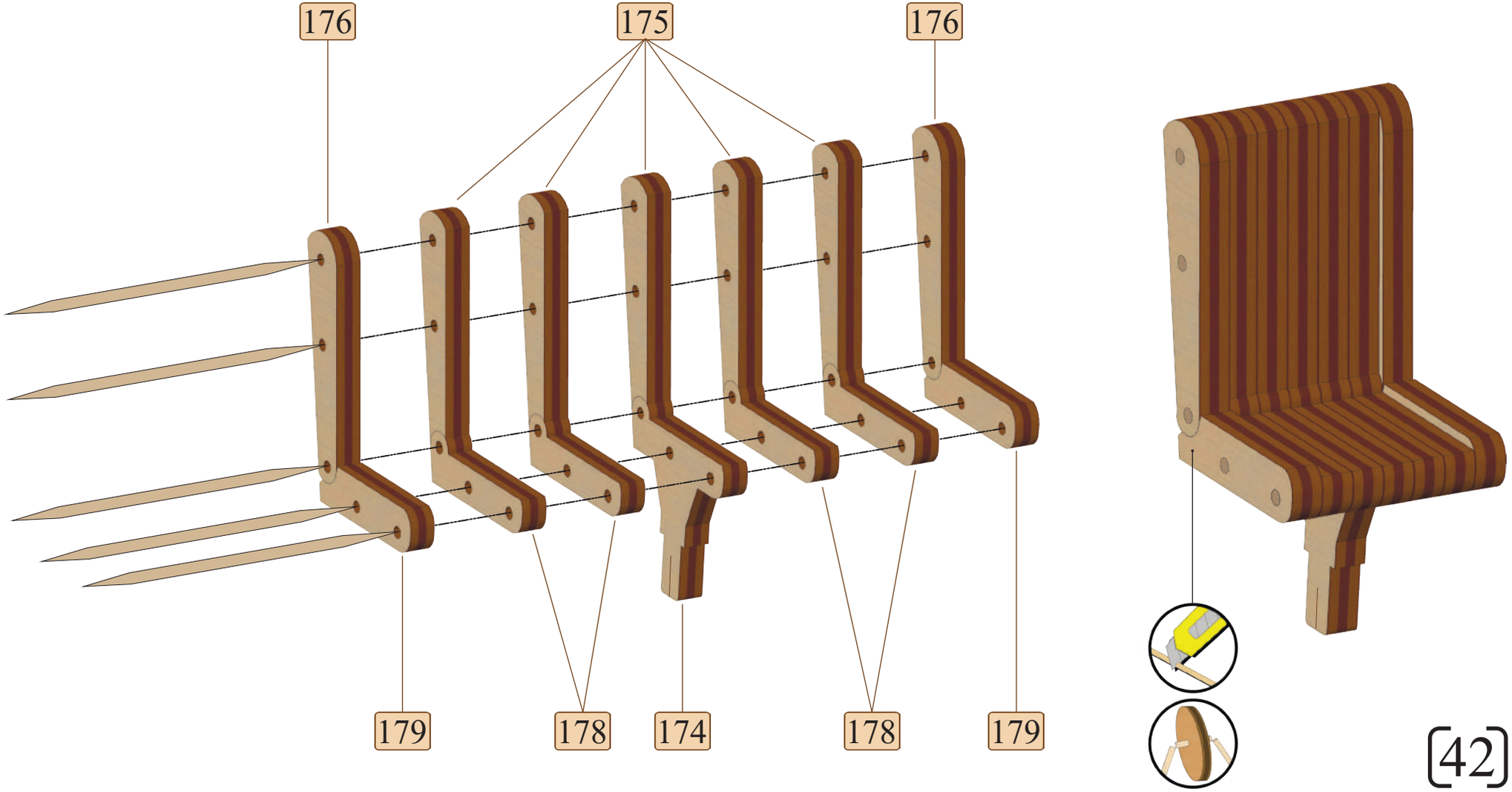
176
175
176
179
178
174
178
179

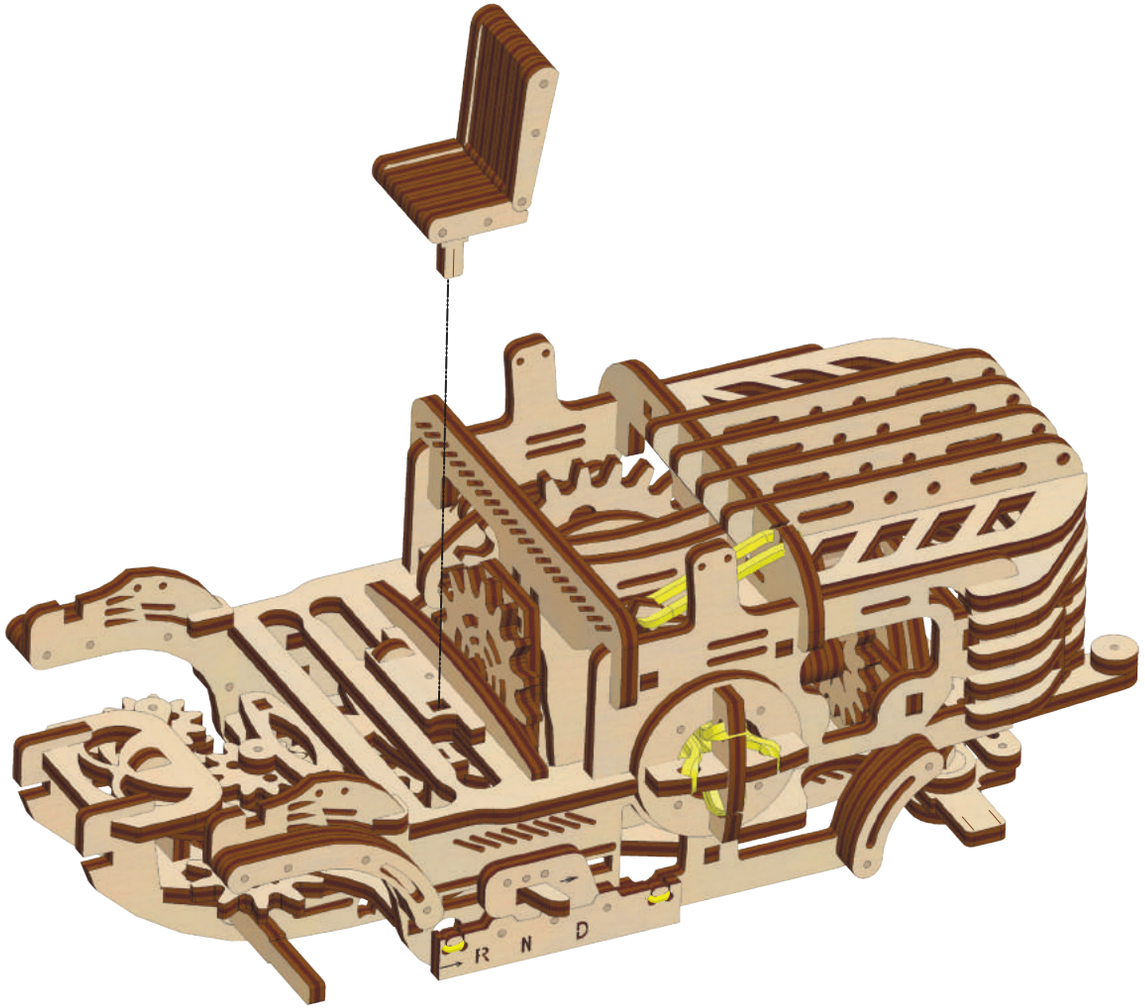
R N D

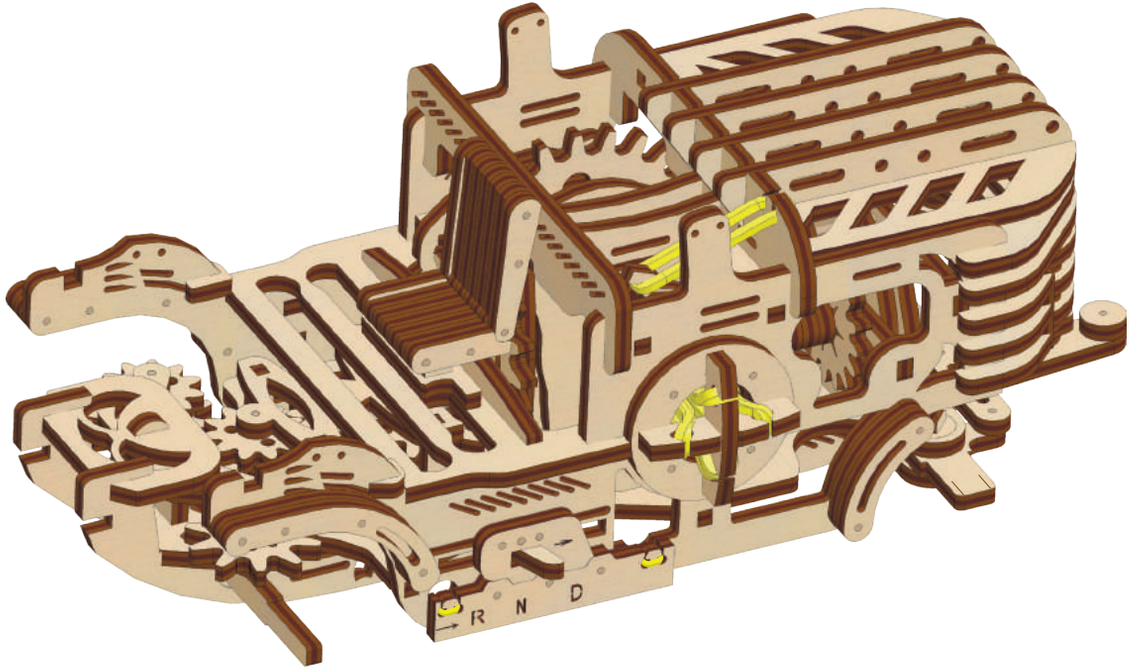
R N D

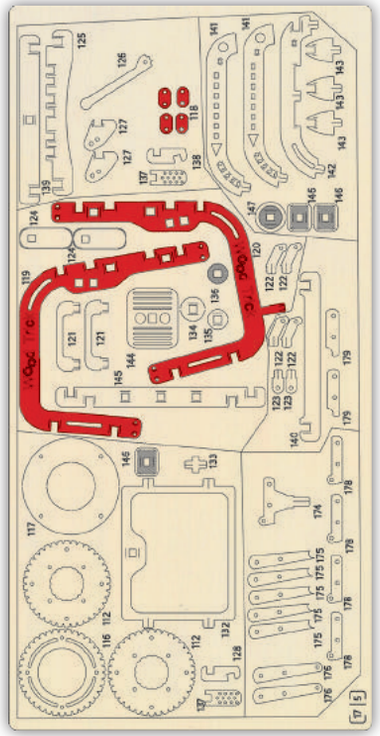

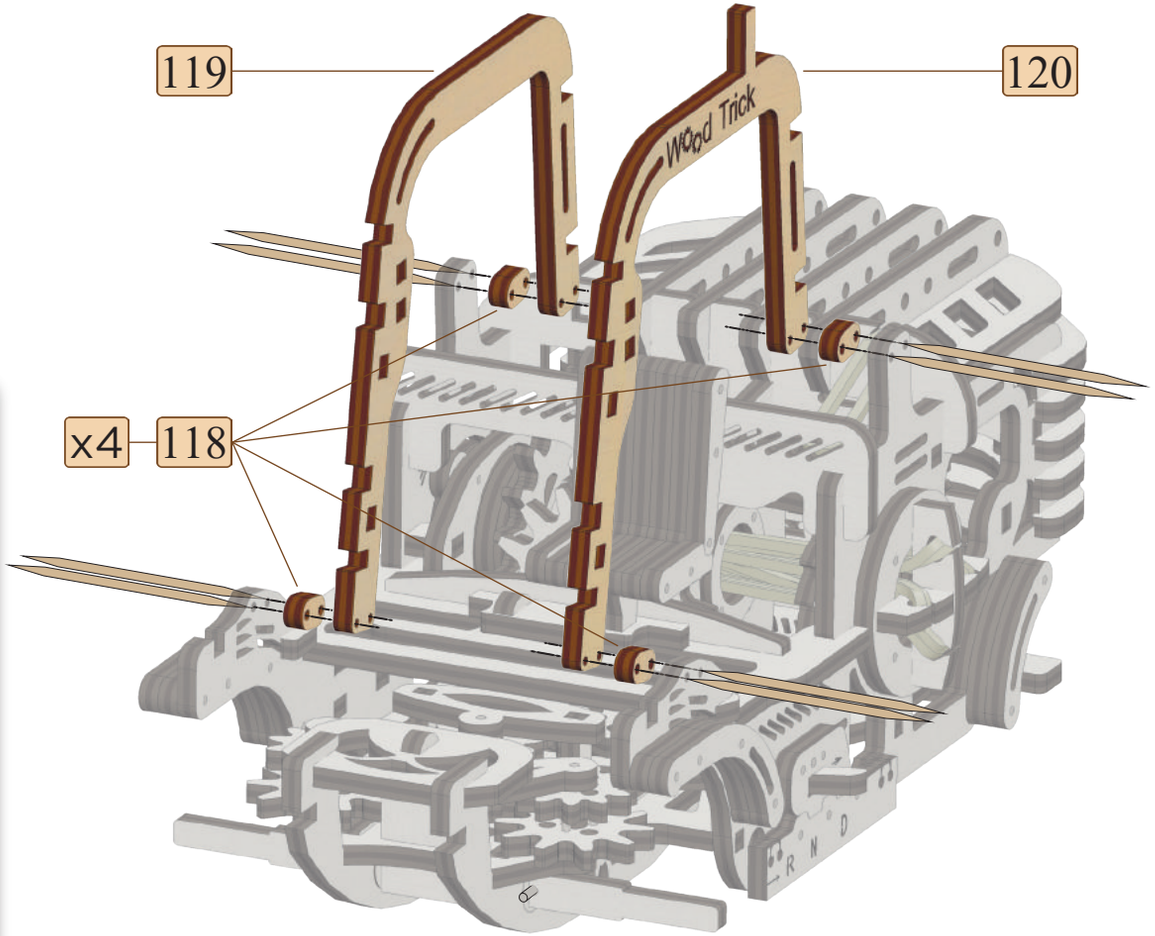
119
120
x4
118
Wood Trick

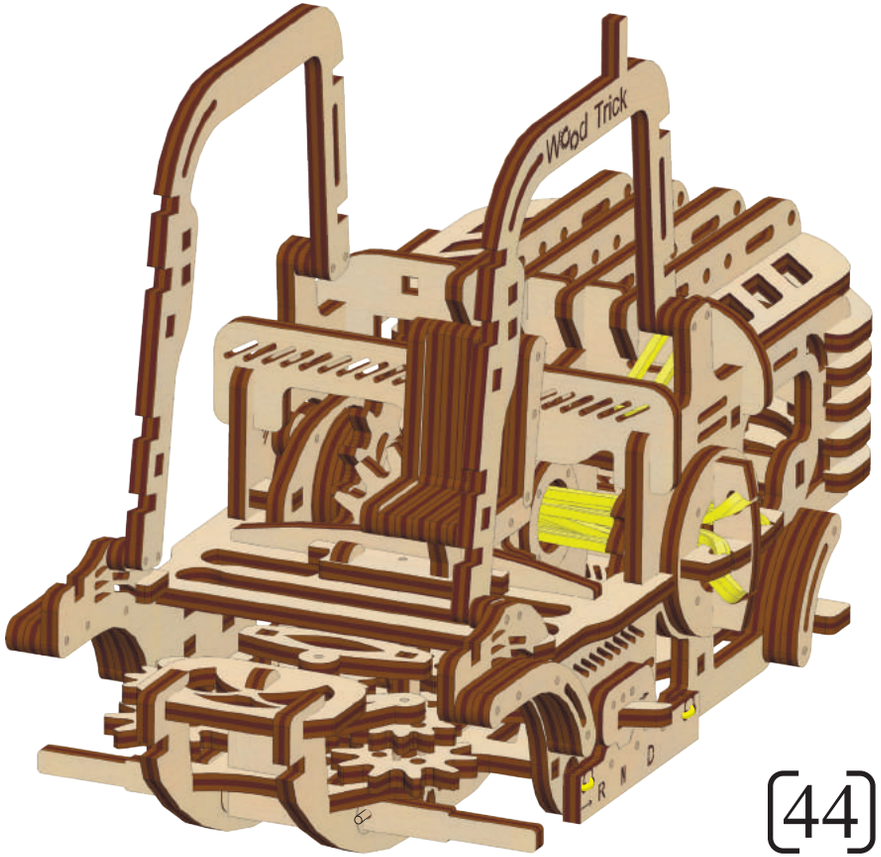
Wood Trick

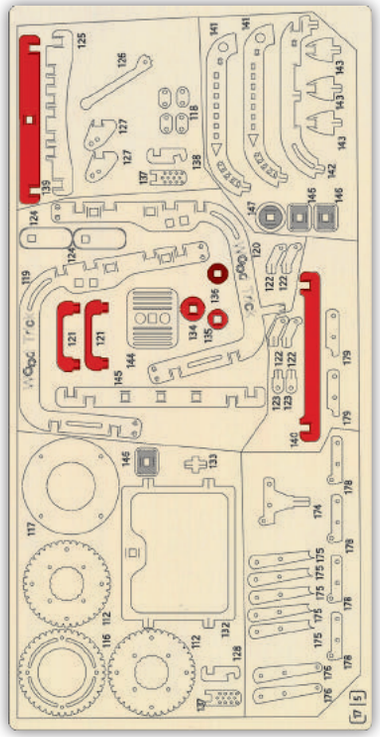

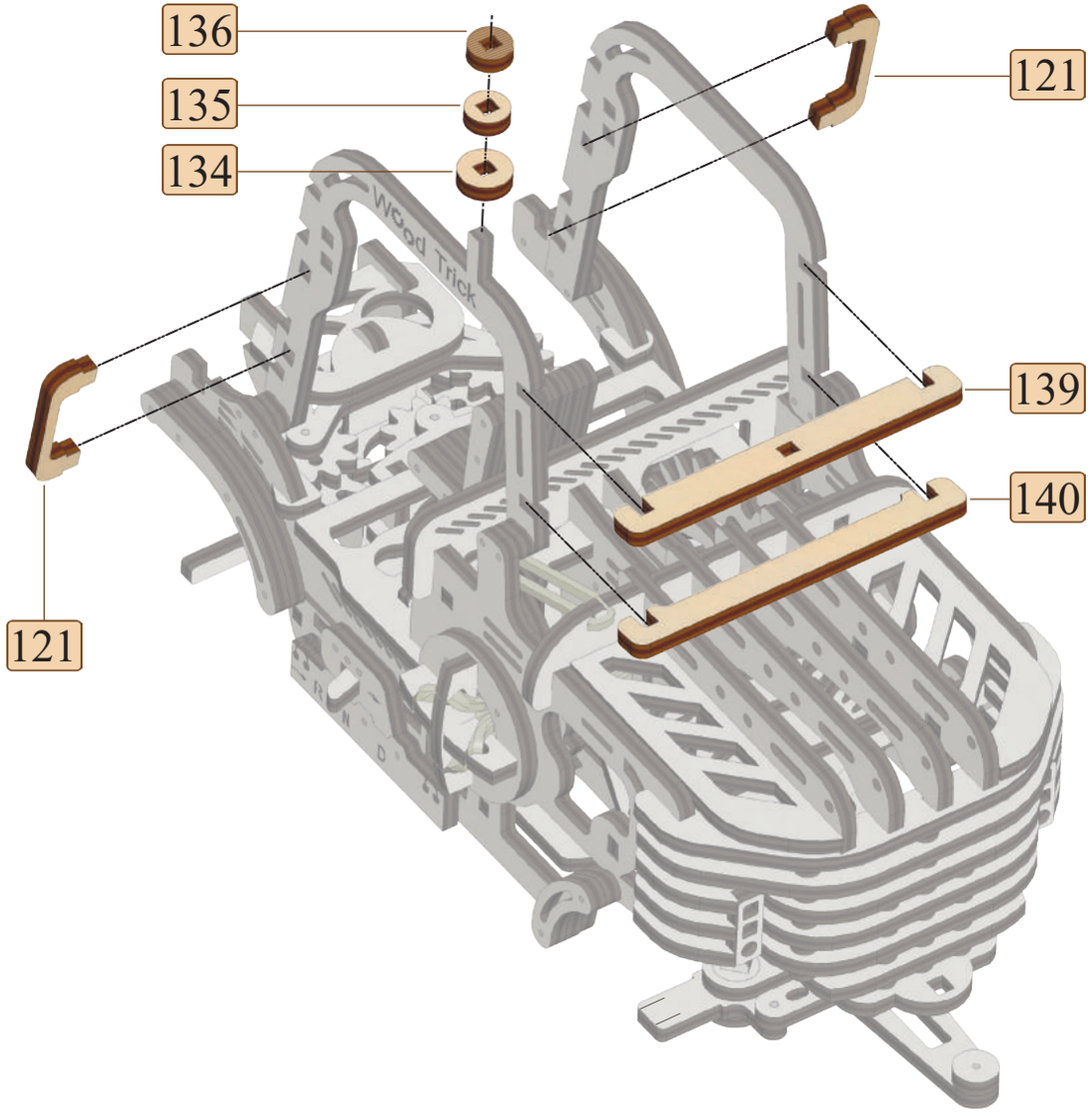
136
135
134
121
139
140
121
Wood Trick

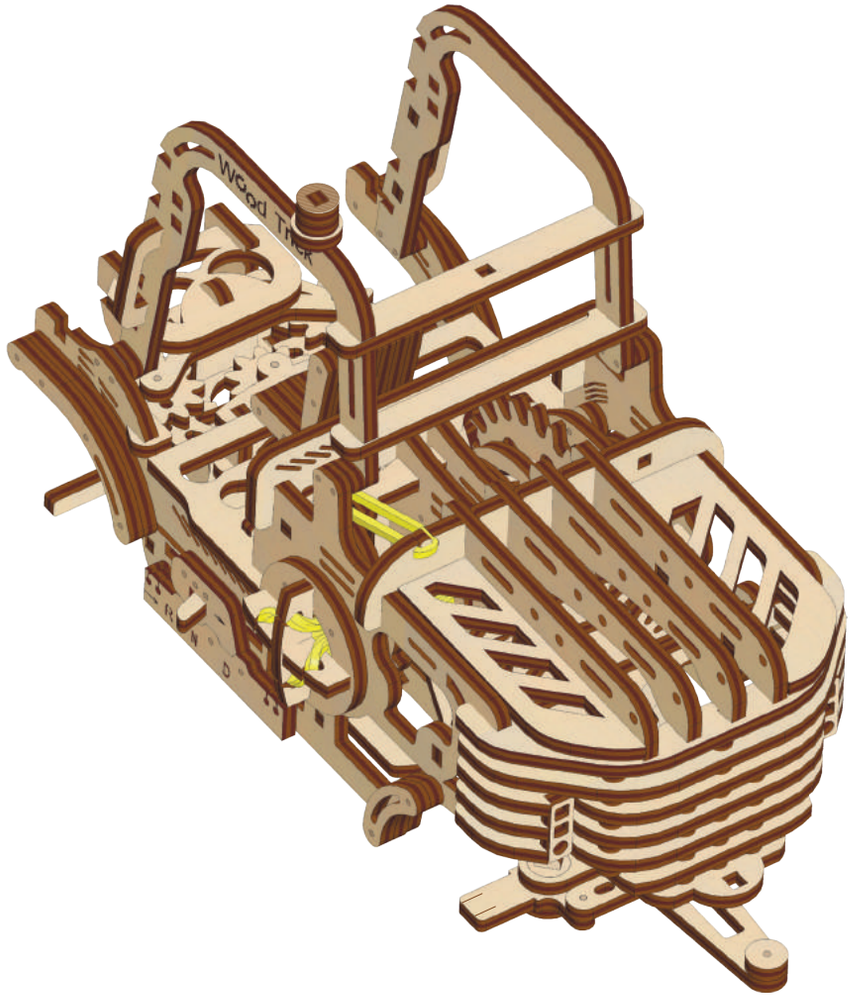
Wood Trick

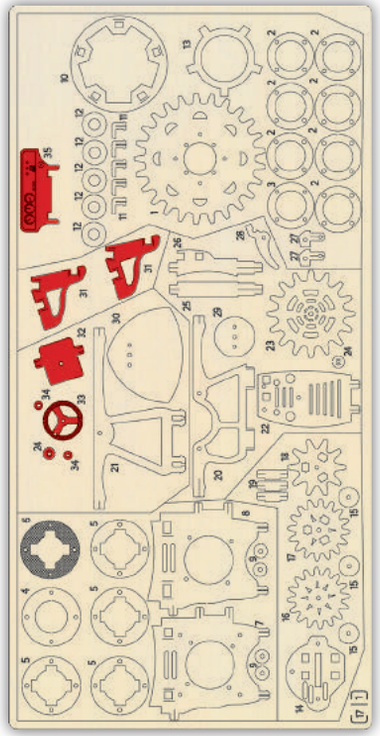

1

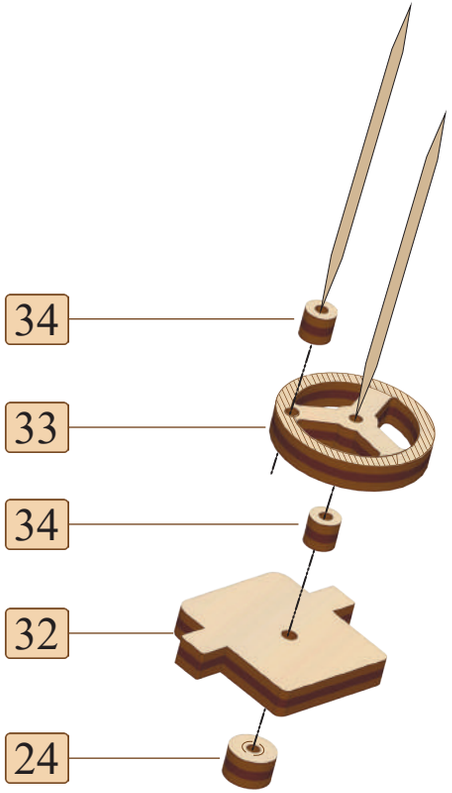

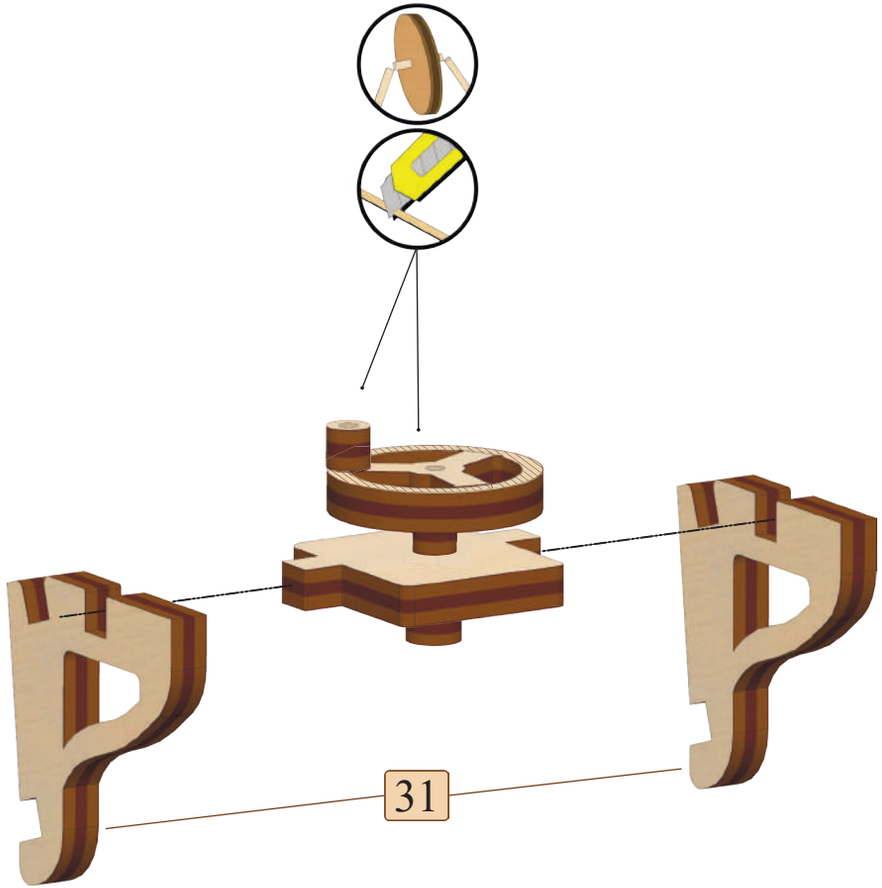

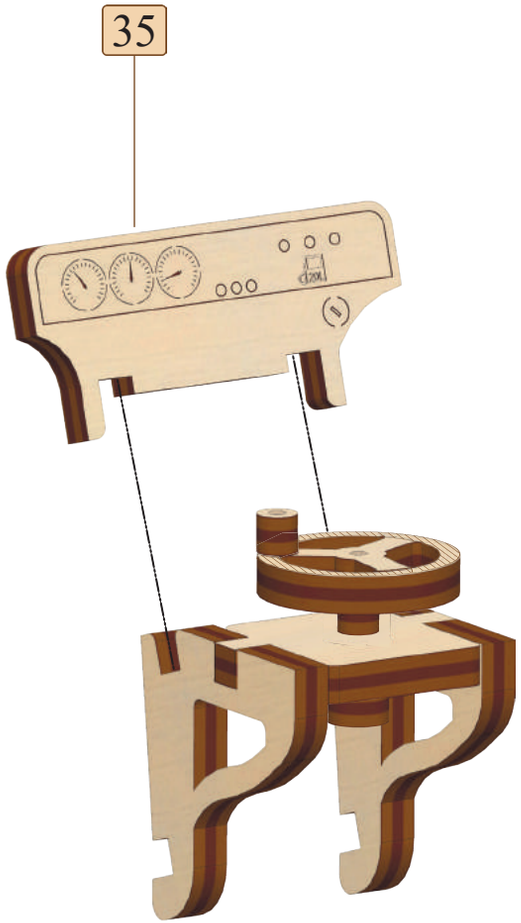

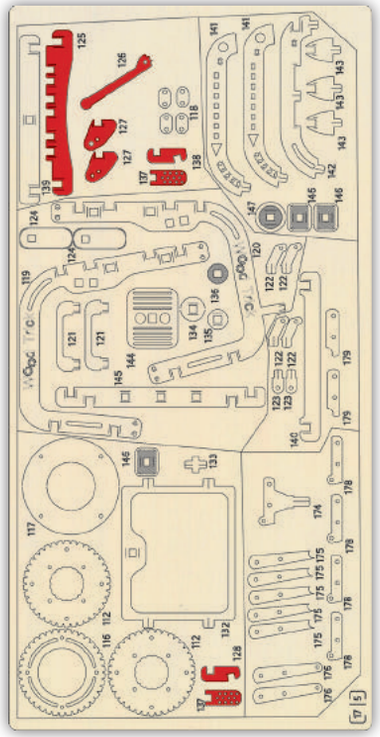

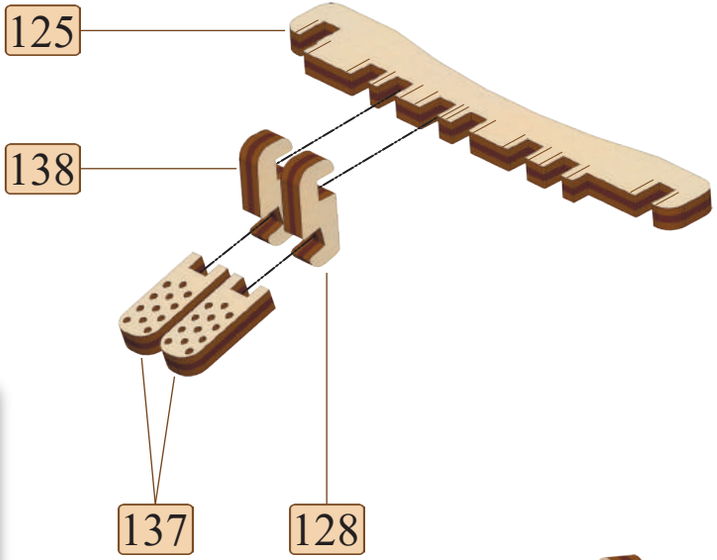
125
138
137
128

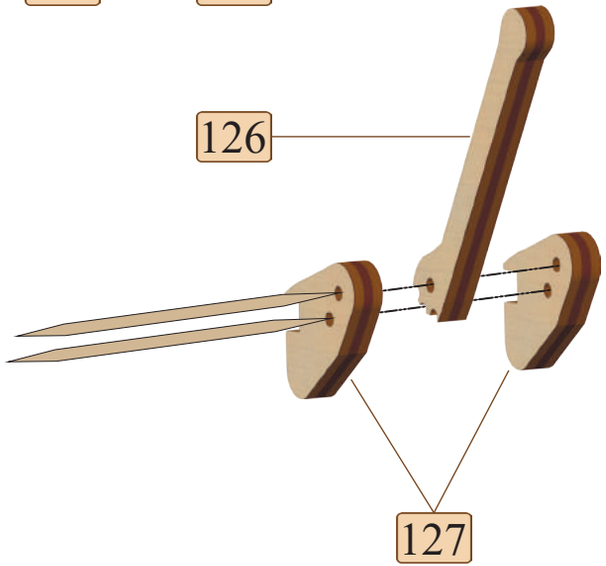
126
127

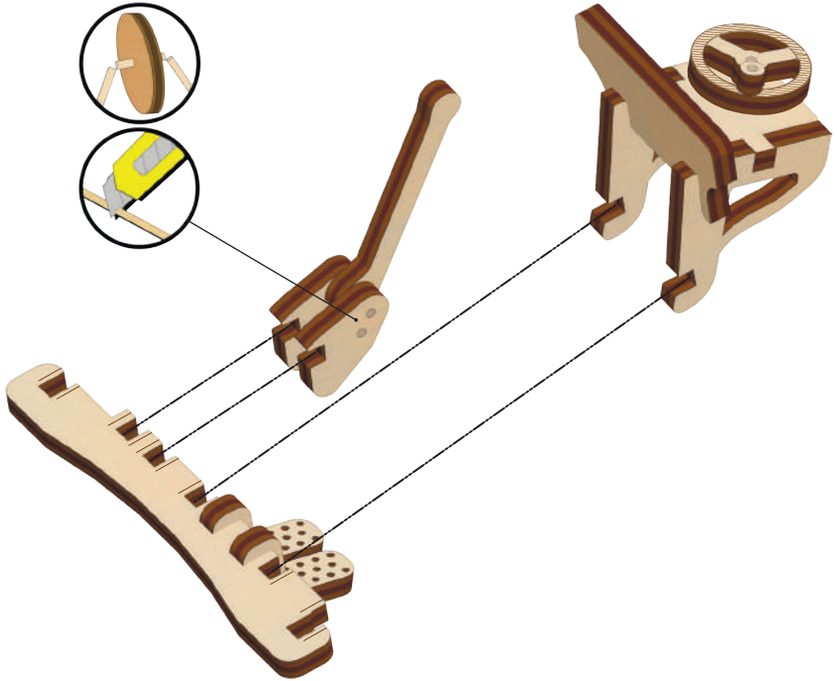

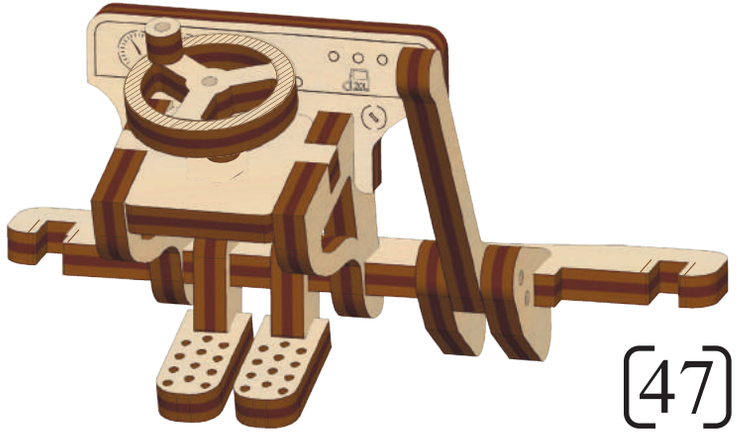

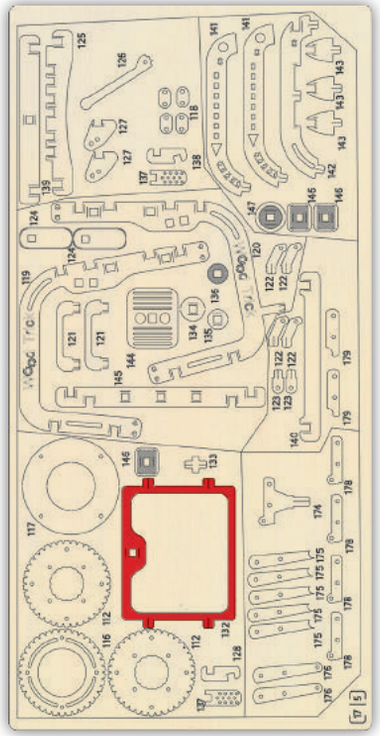

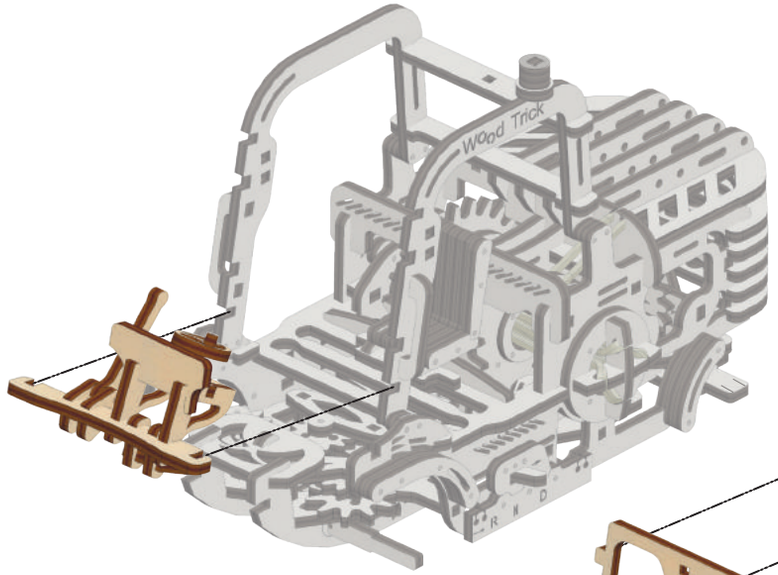
Wood Trick

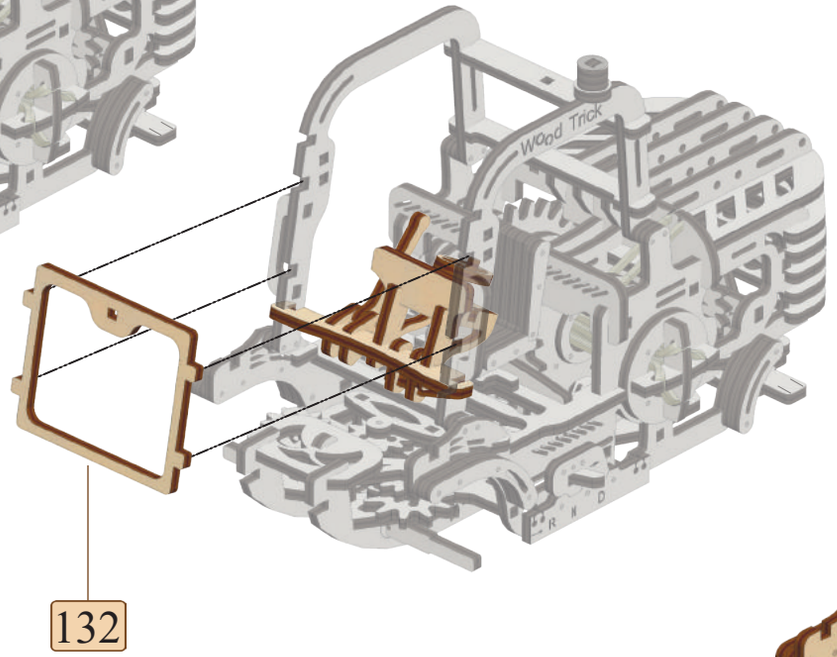
Wood Trick
132

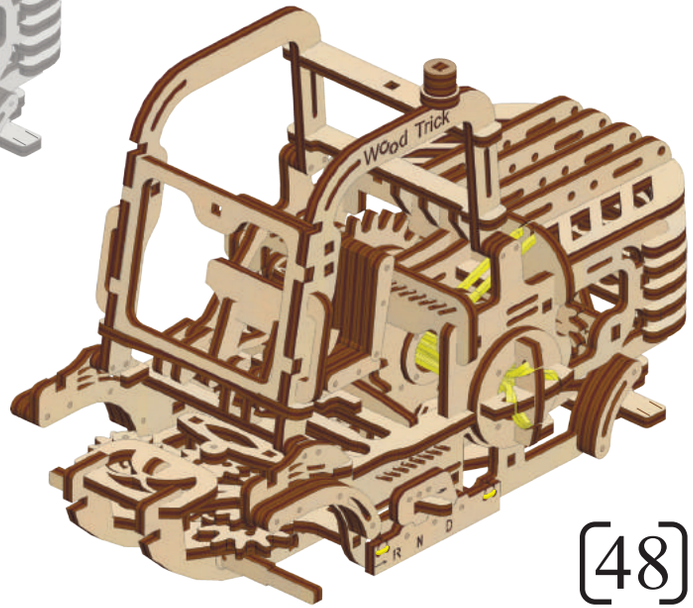
Wood Trick

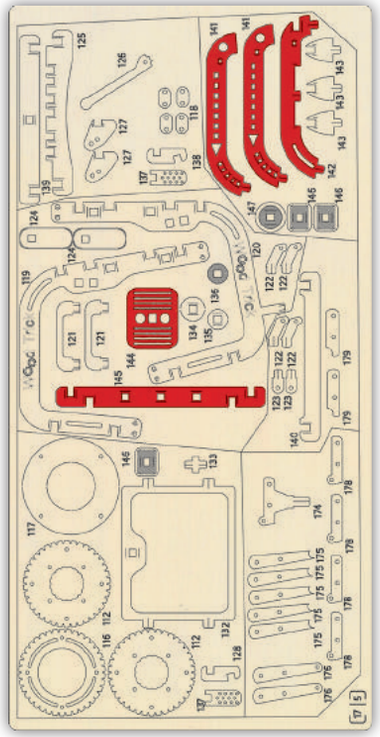

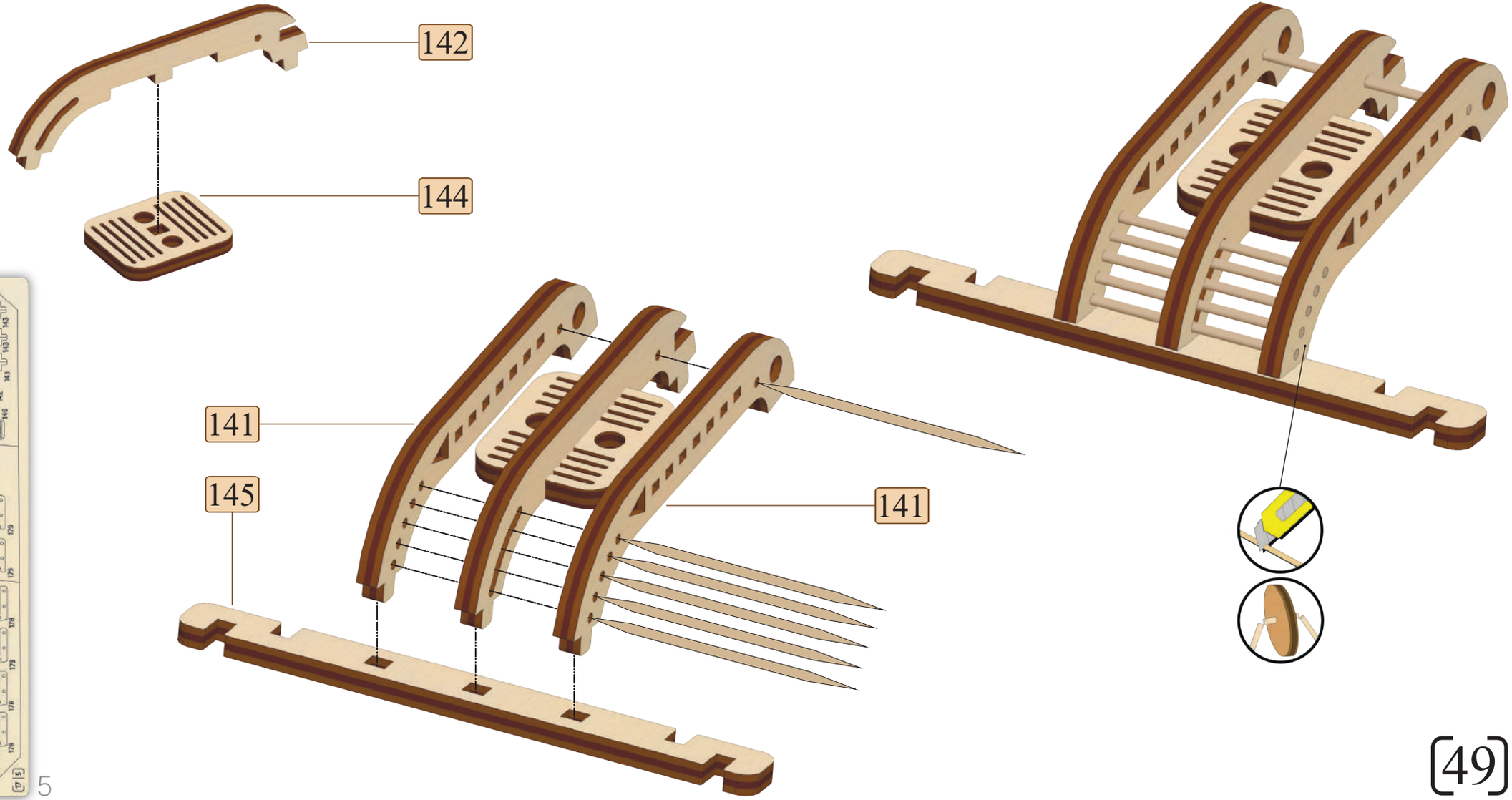
142
144
141
145
141

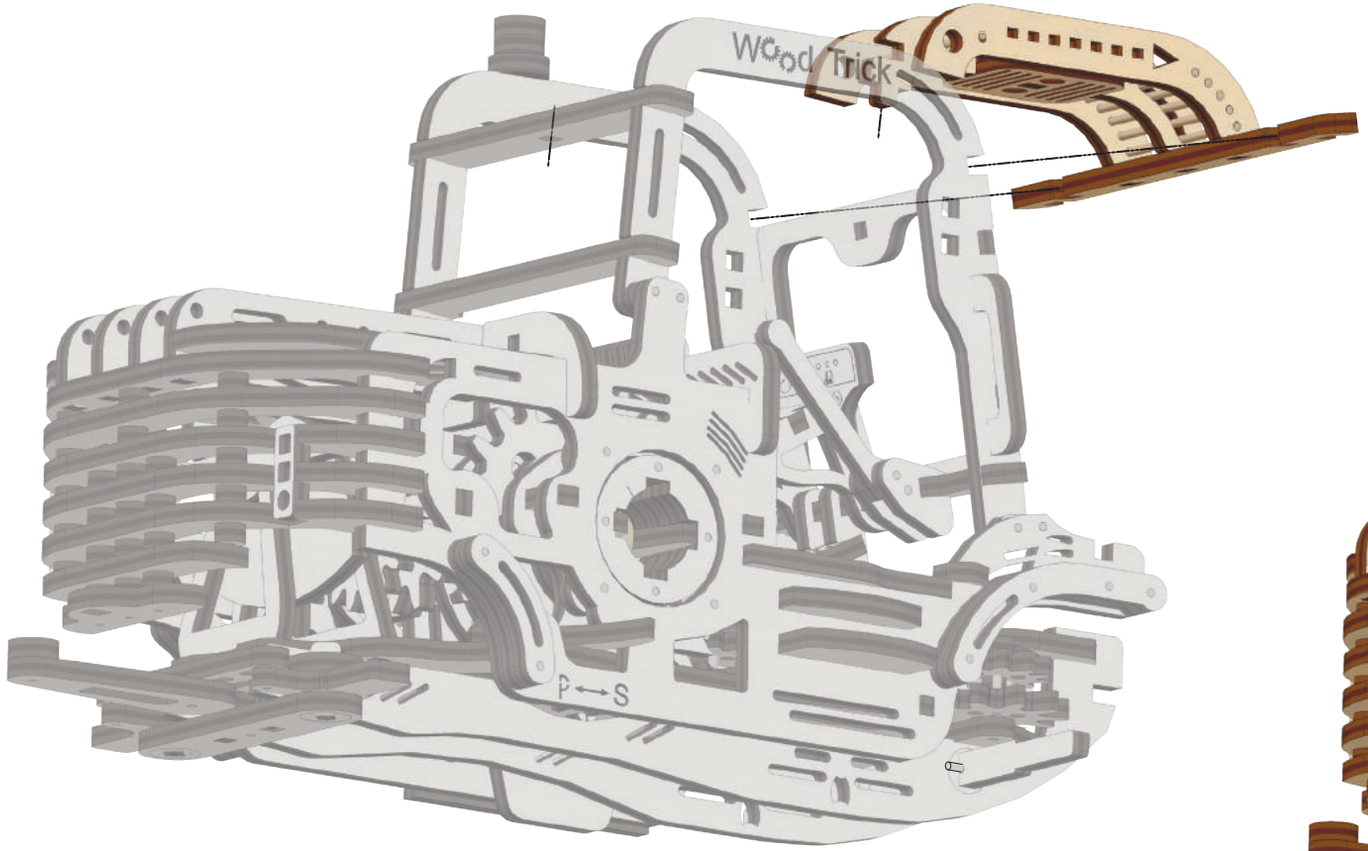
Wood Trick
P ⟷ S

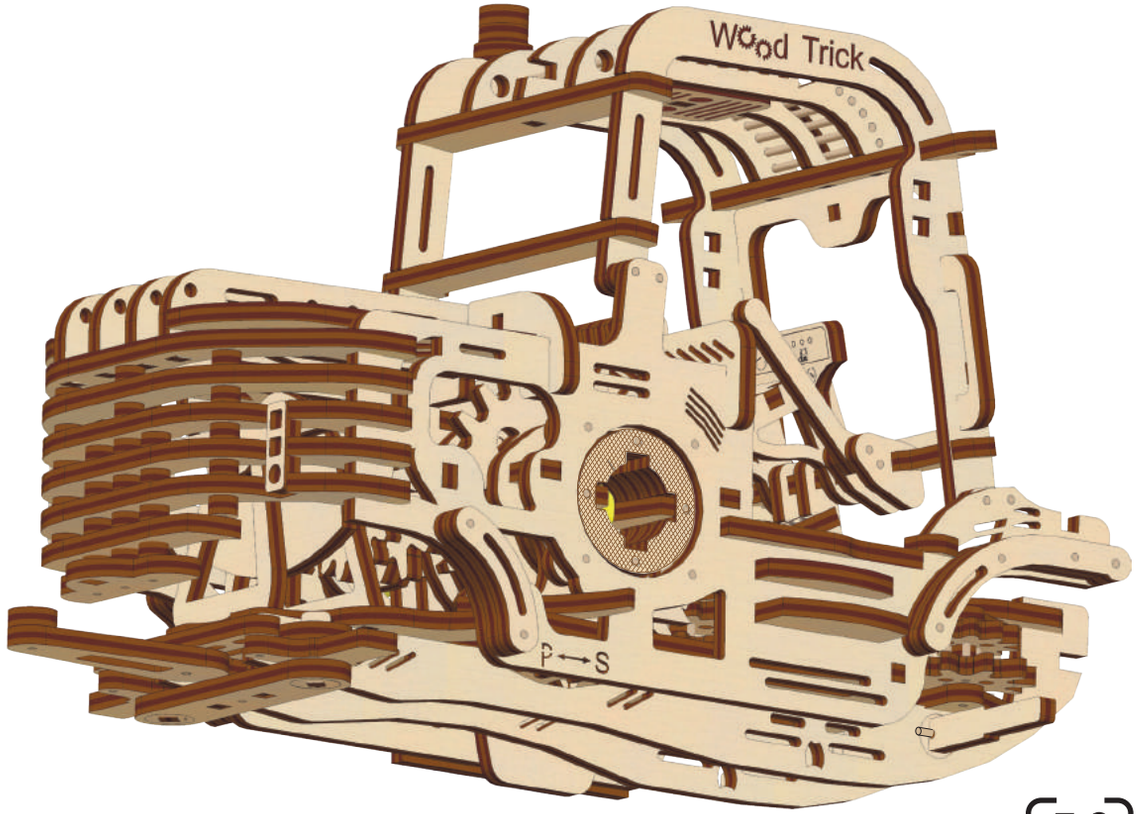
Wood Trick
P ⟷ S

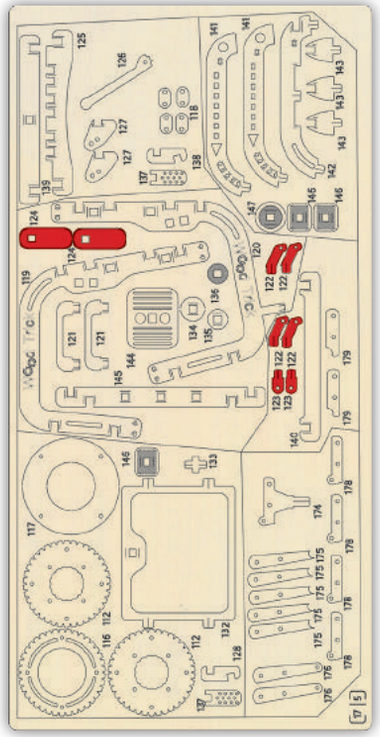

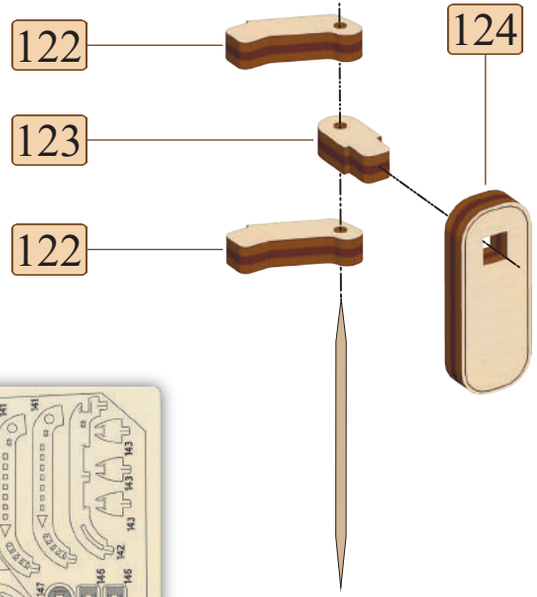
122
123
122
124

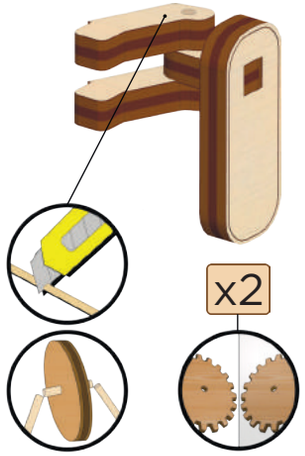
x2

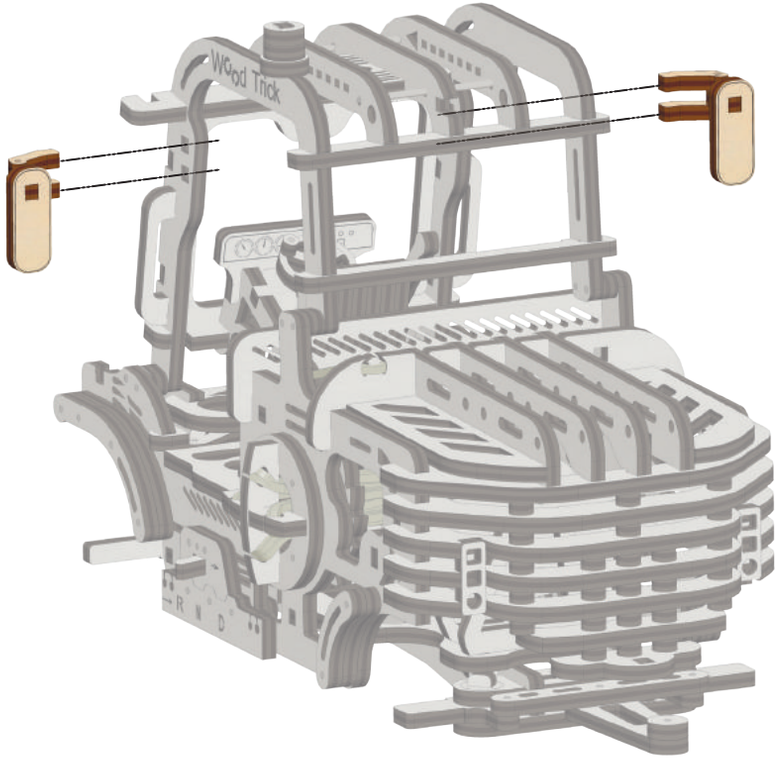
Wood Trick

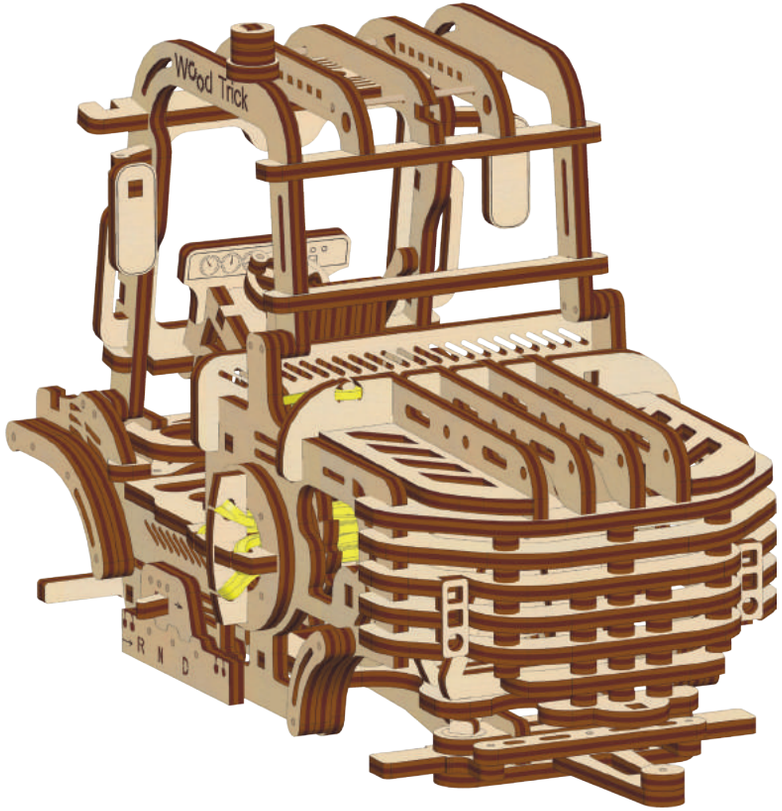
Wood Trick

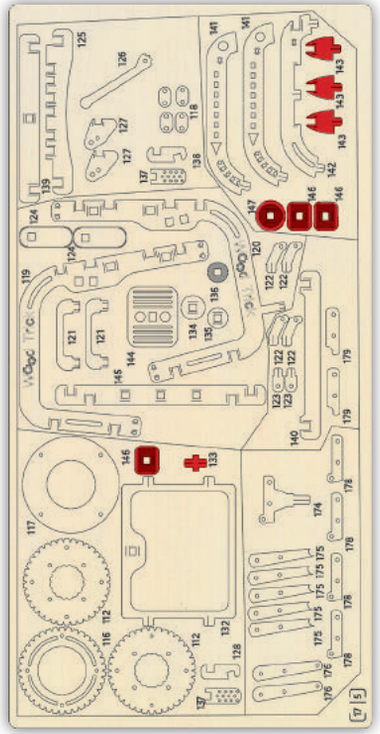

5

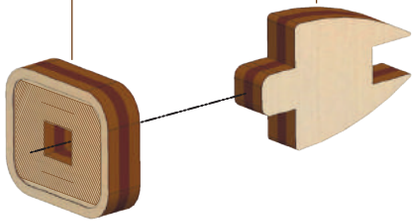

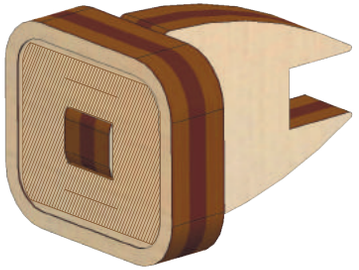

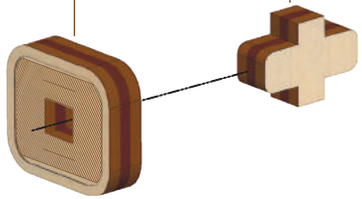

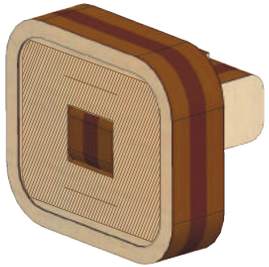

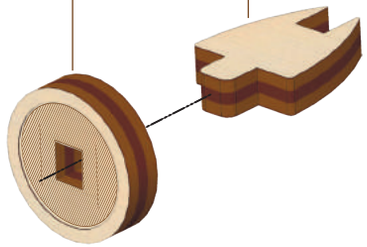

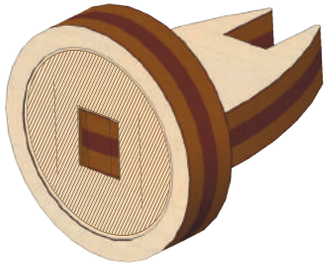

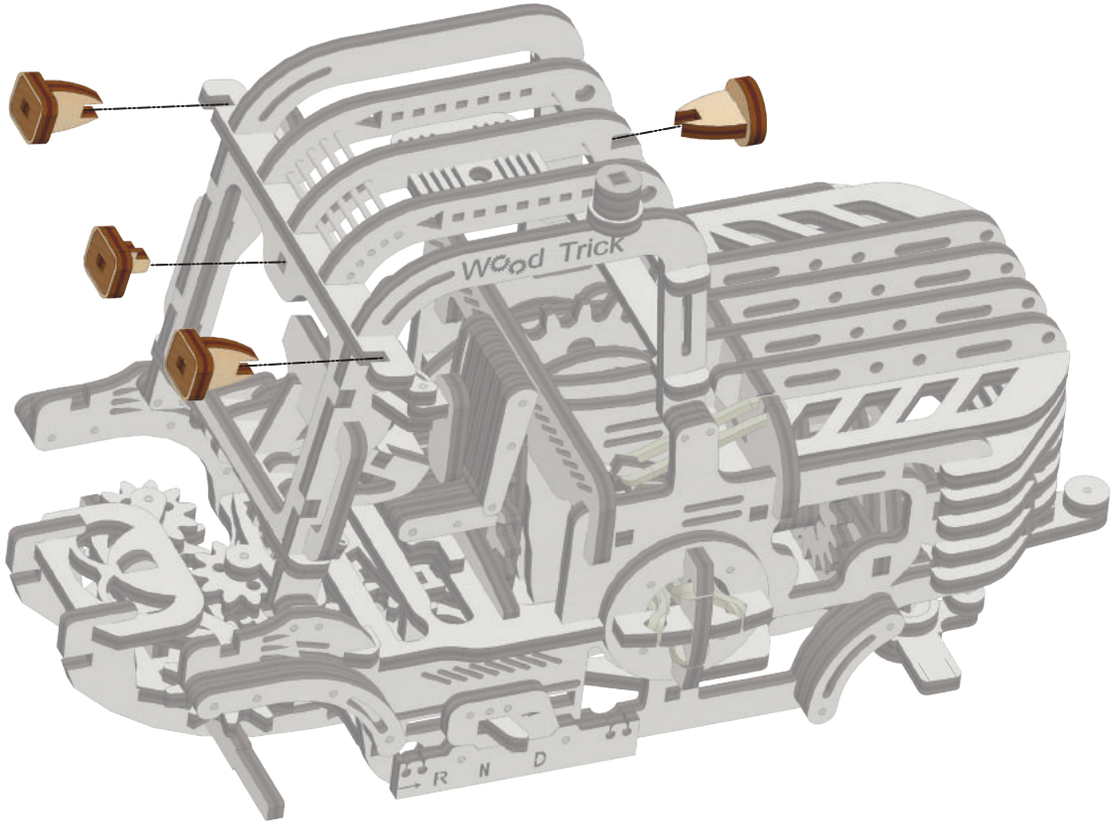
Wood Trick
R N D

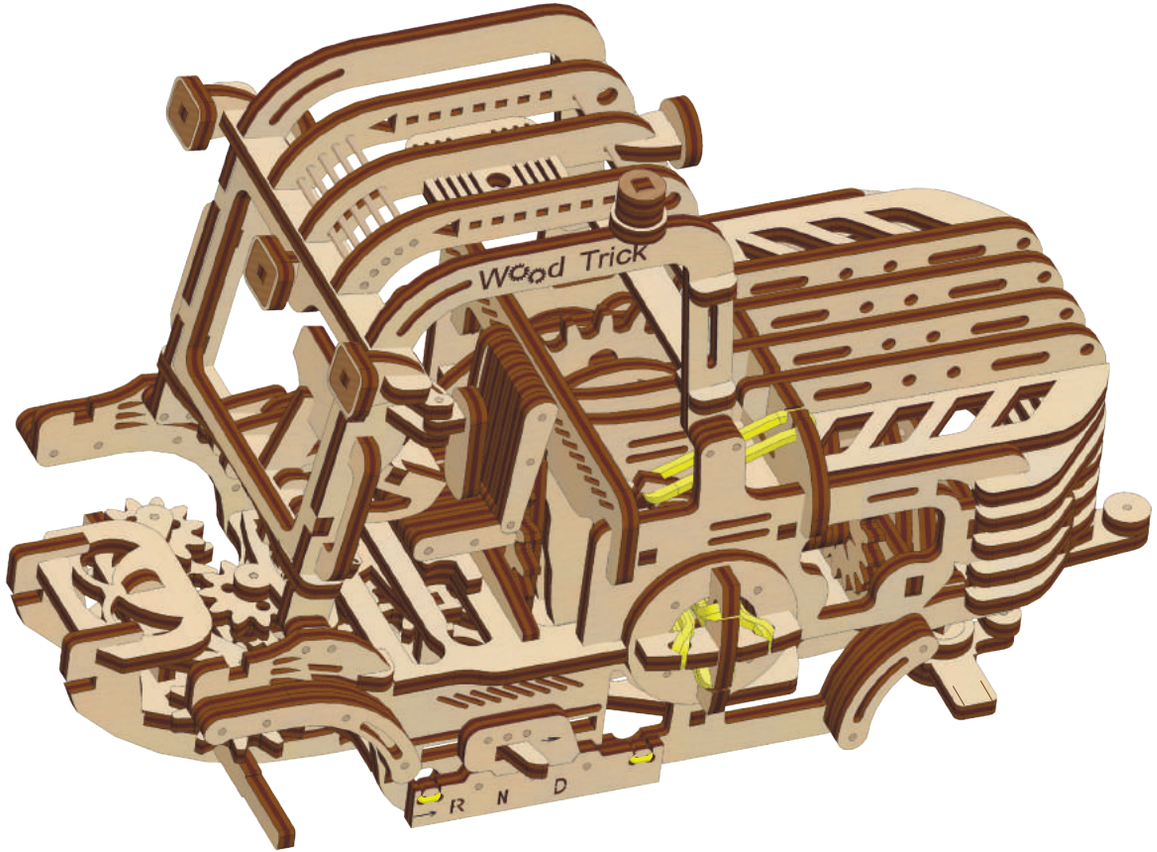
Wood Trick
R N D

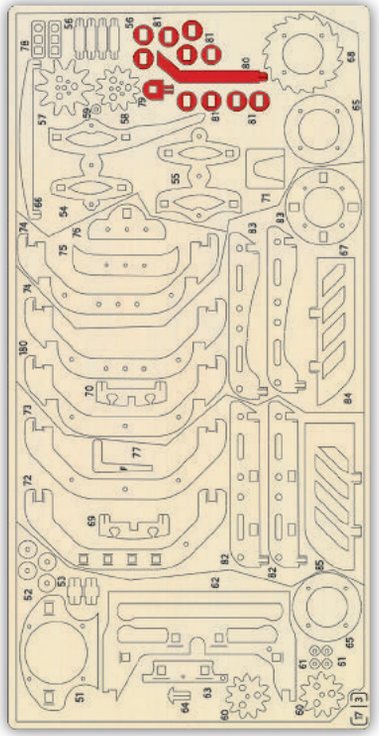

3

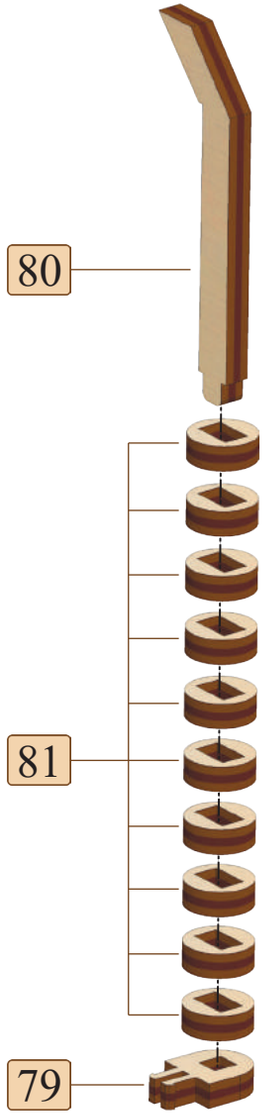

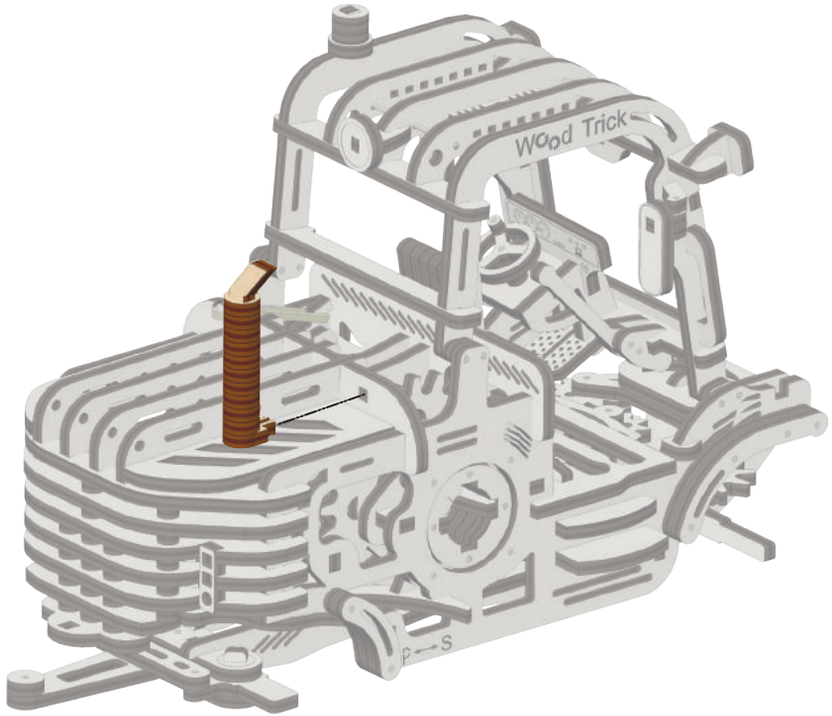

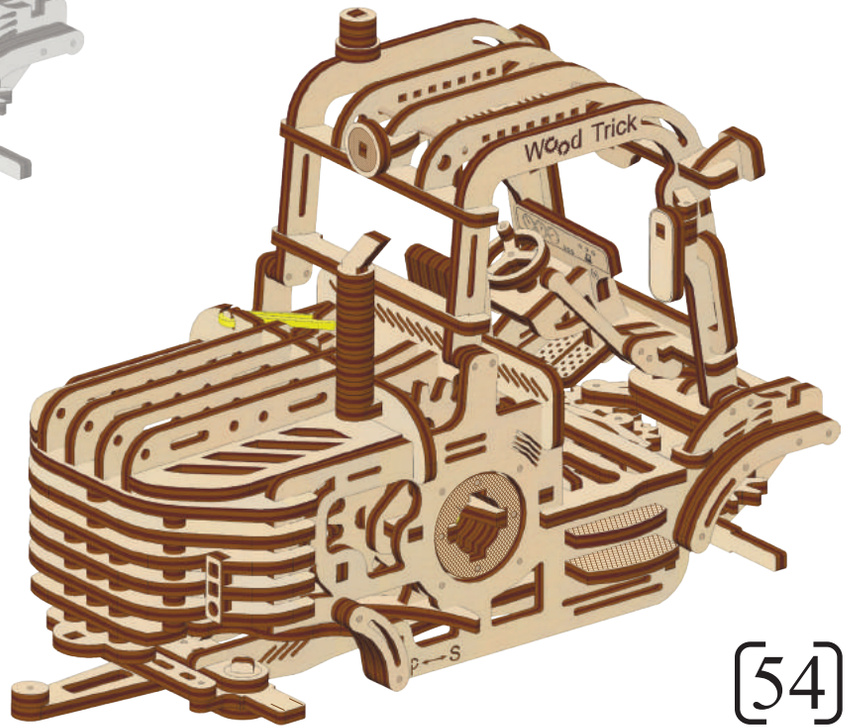

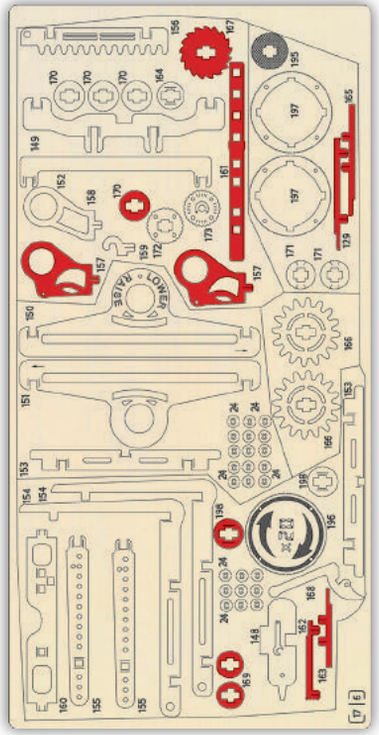

6

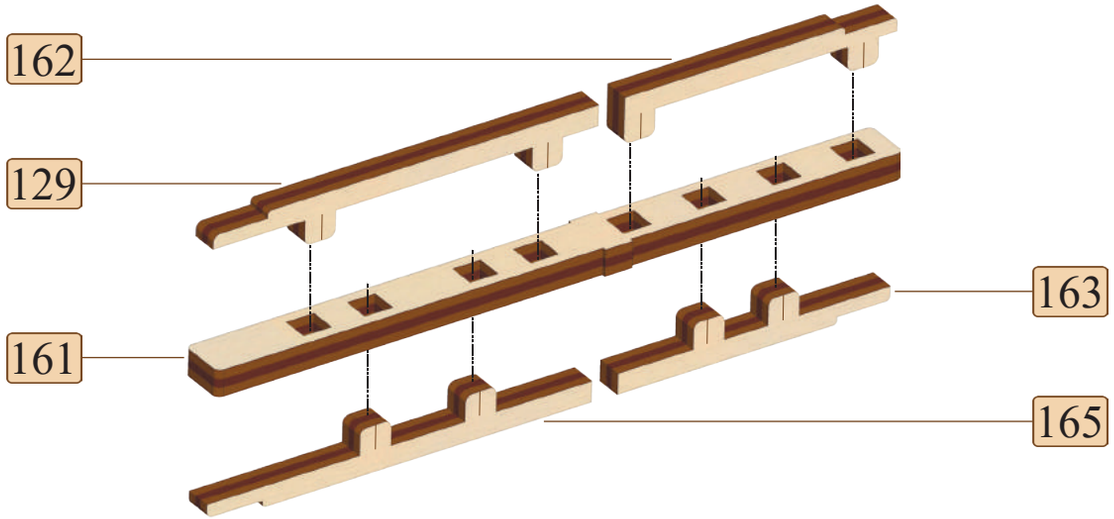

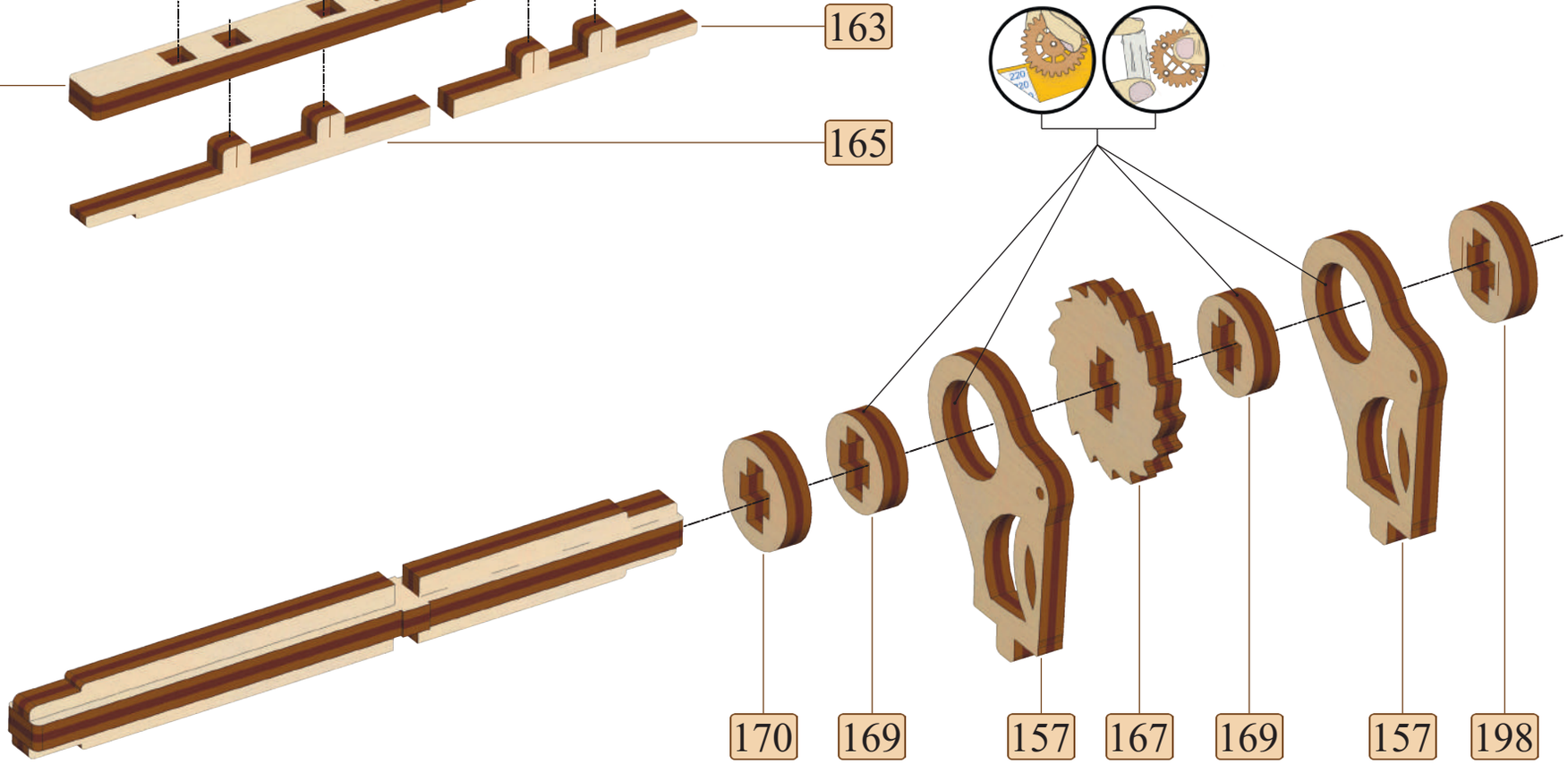

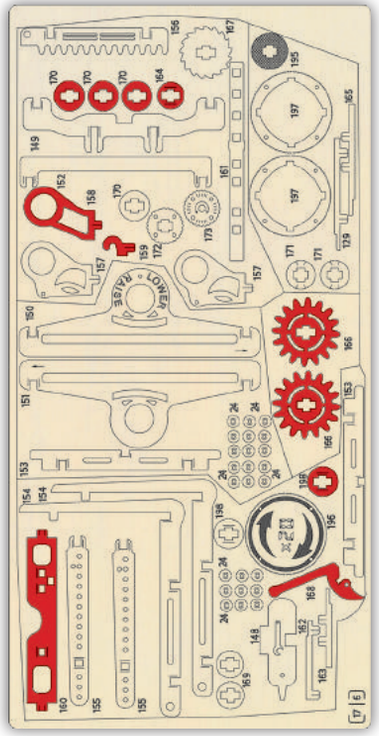

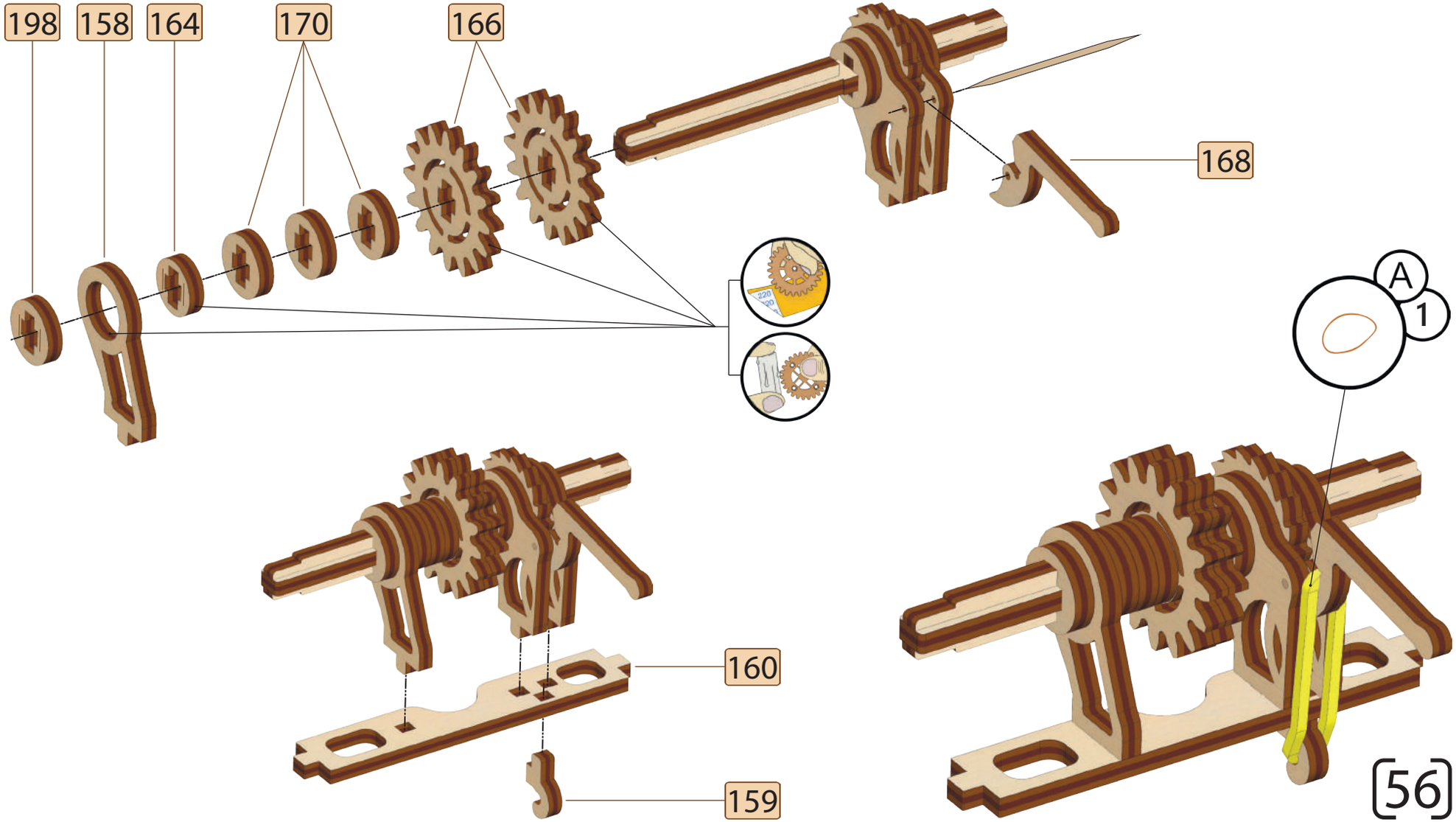
198
158
164
170
166
168
160
159
A
1

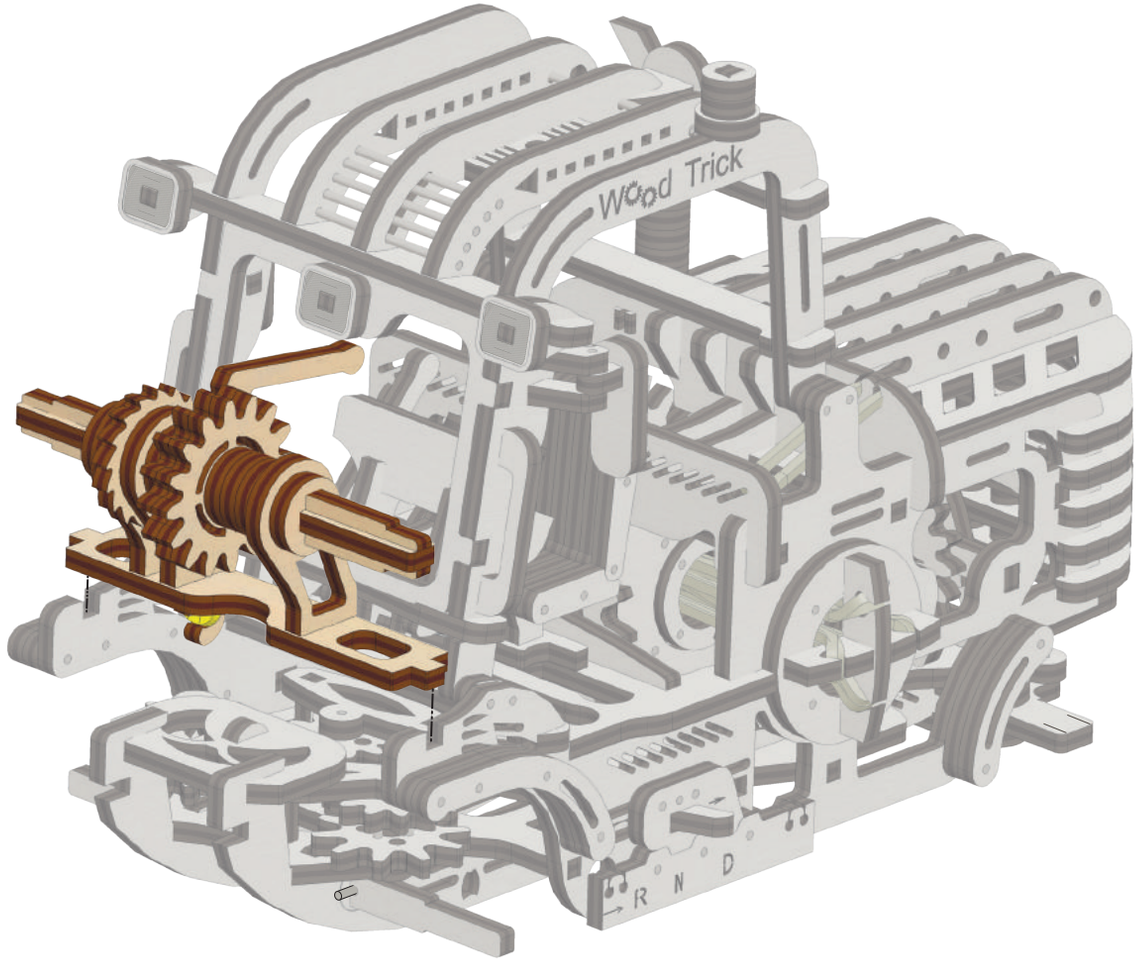
Wood Trick
R N D

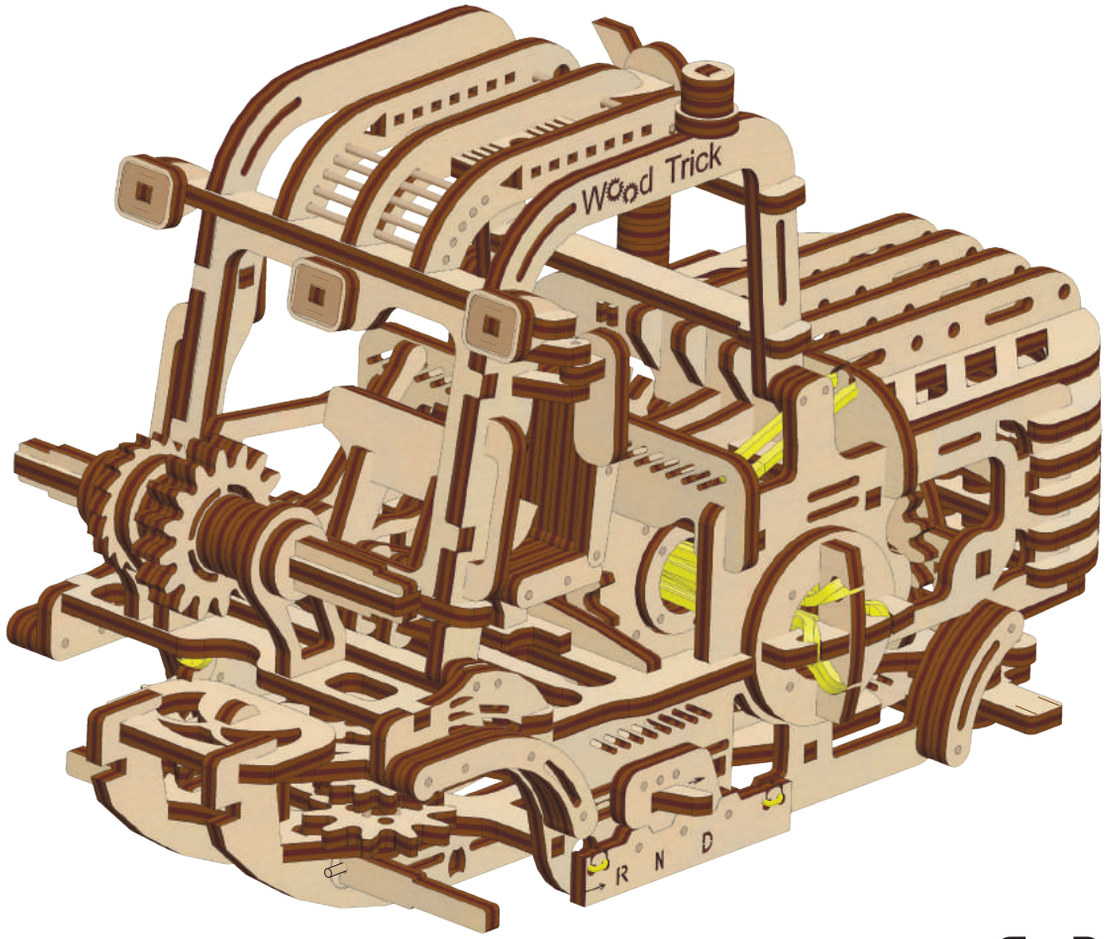
Wood Trick
R N D

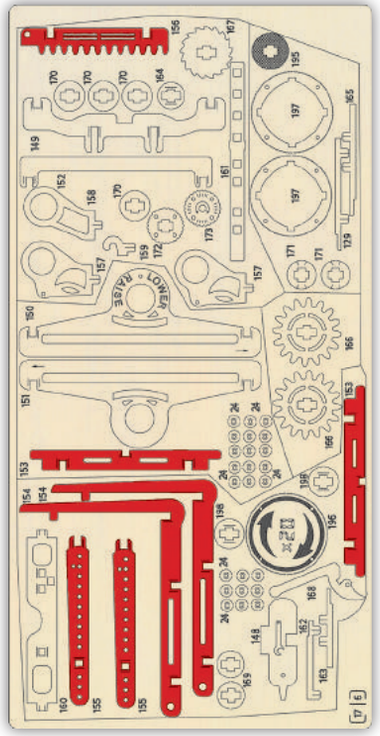

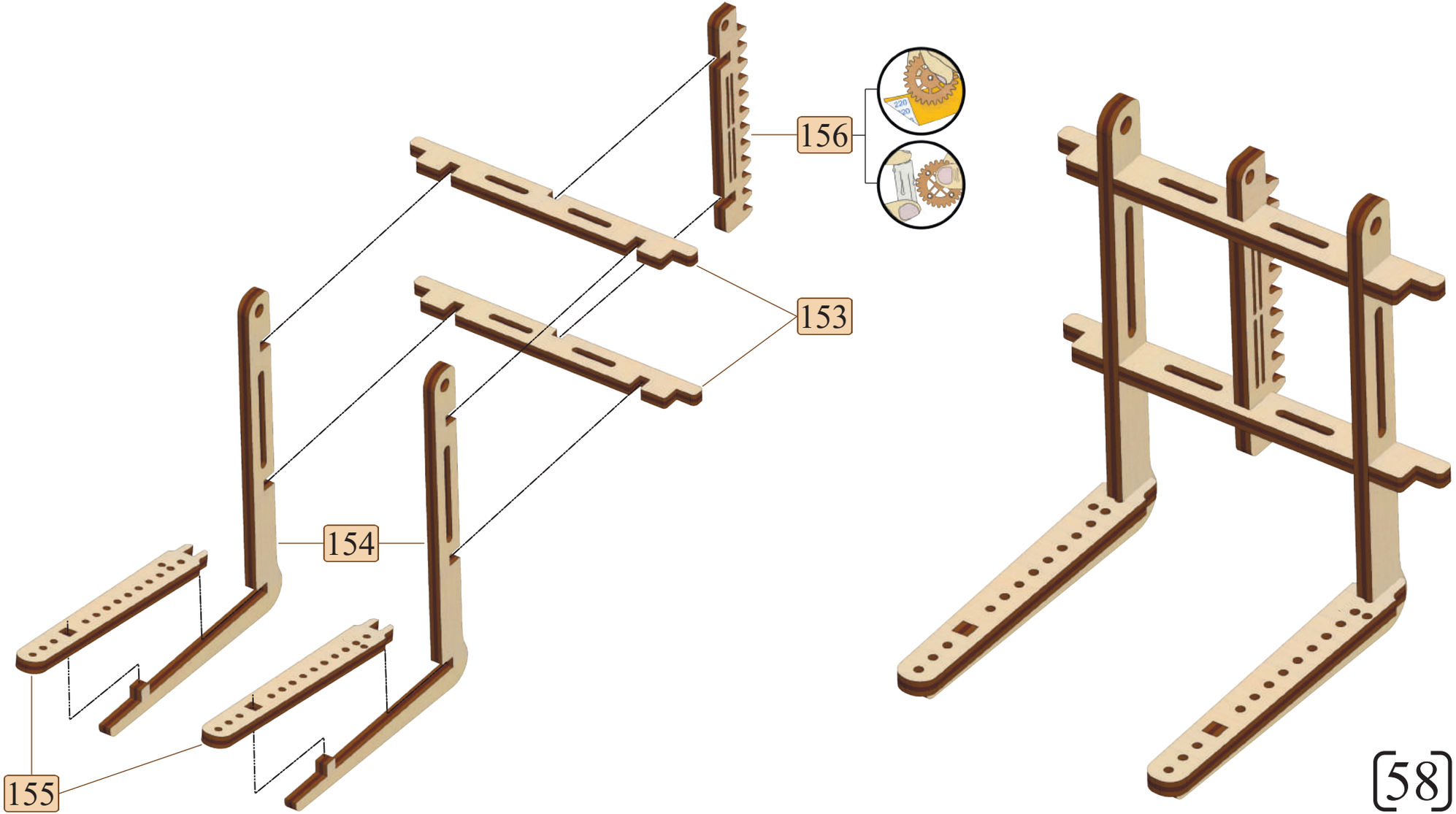
156
153
154
155

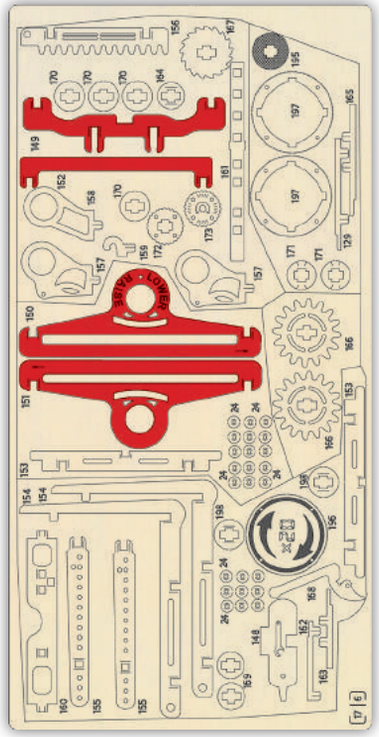

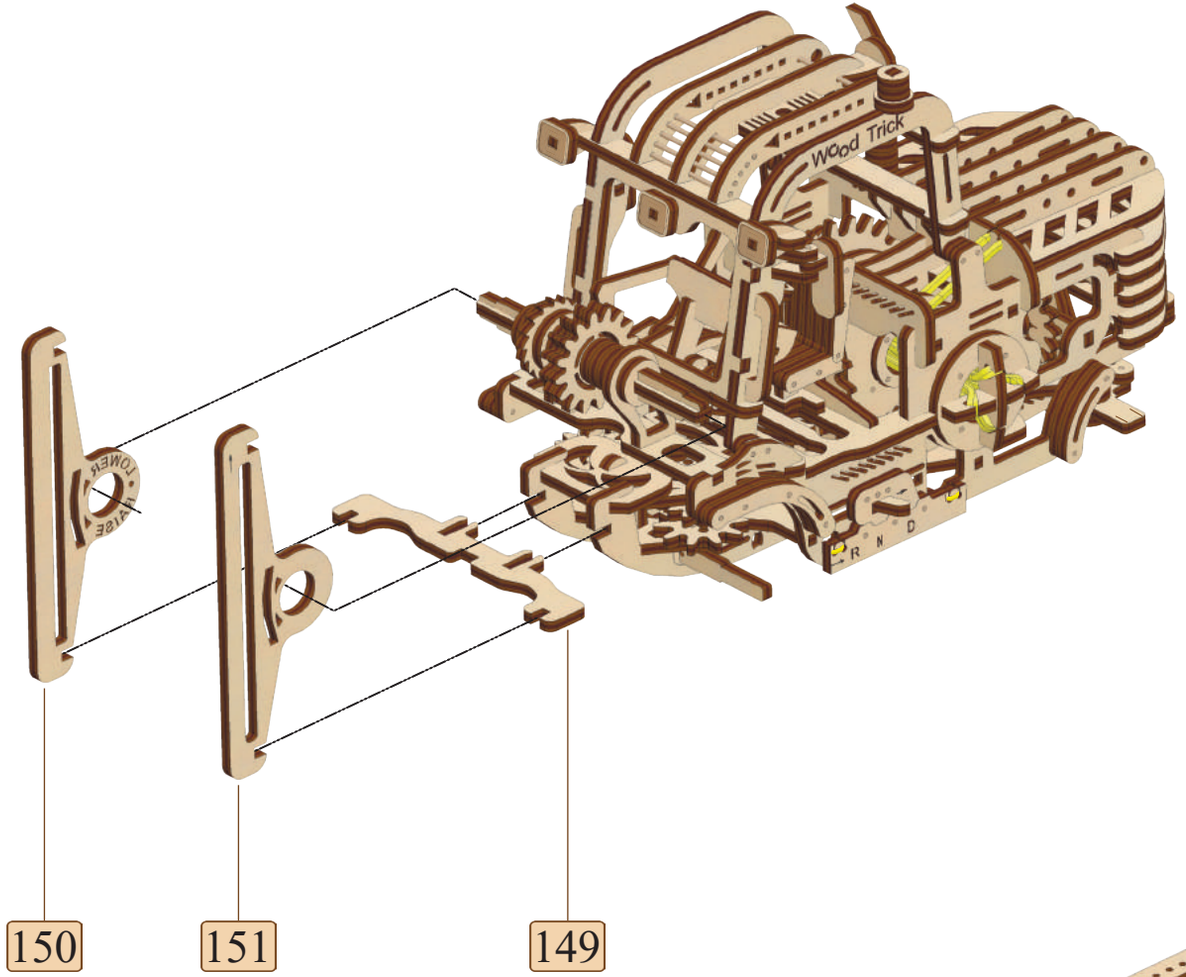
Wood Trick
150
151
149

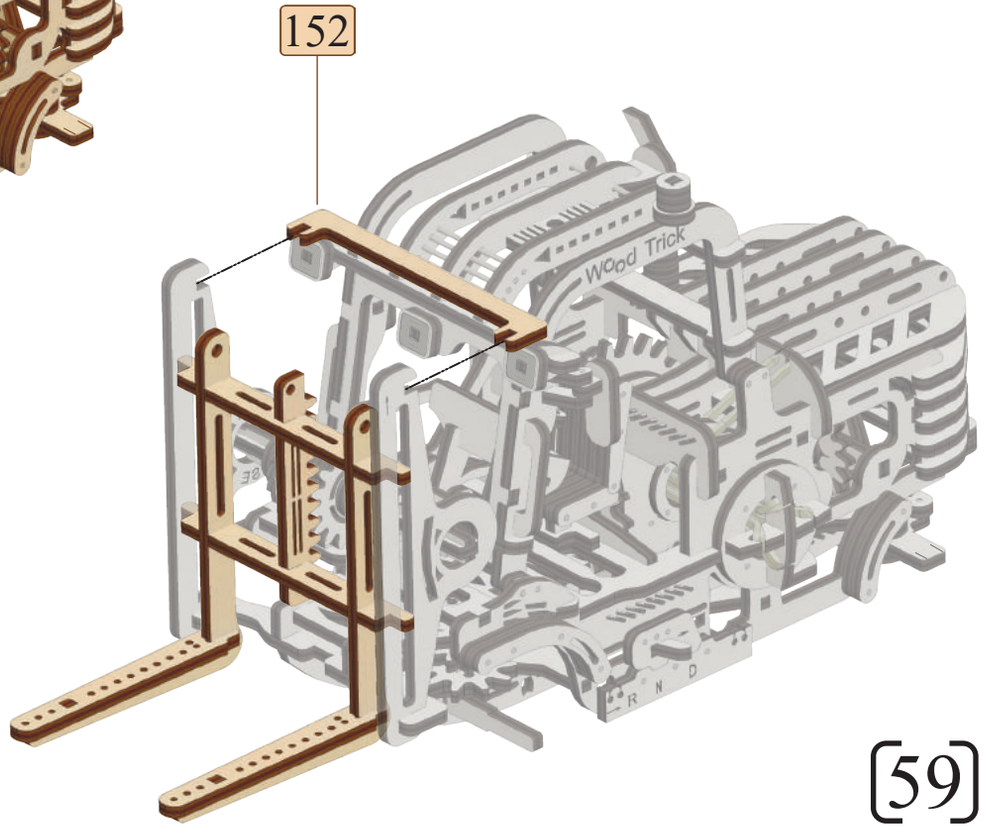
152
Wood Trick

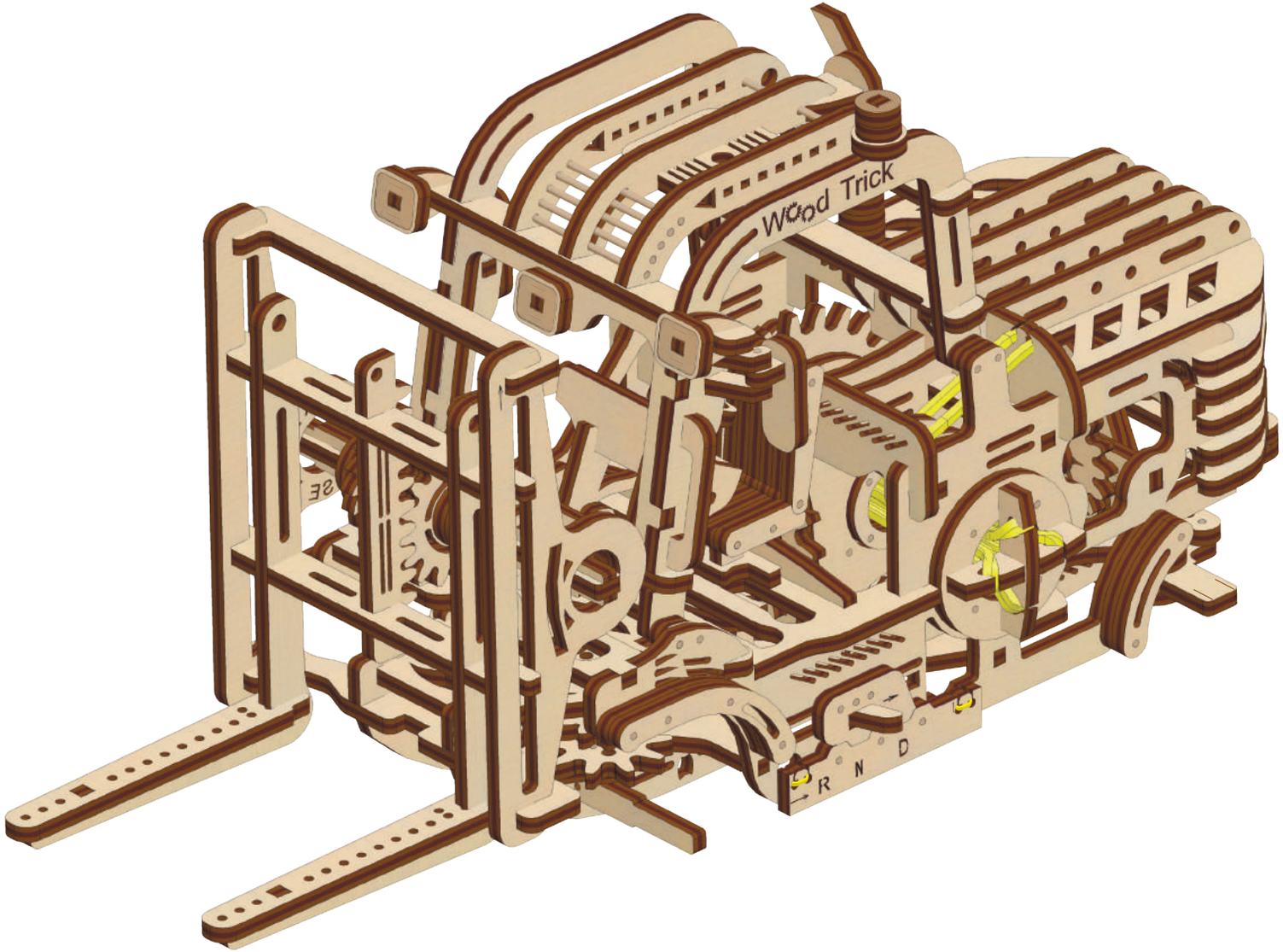
Wood Trick
R N D

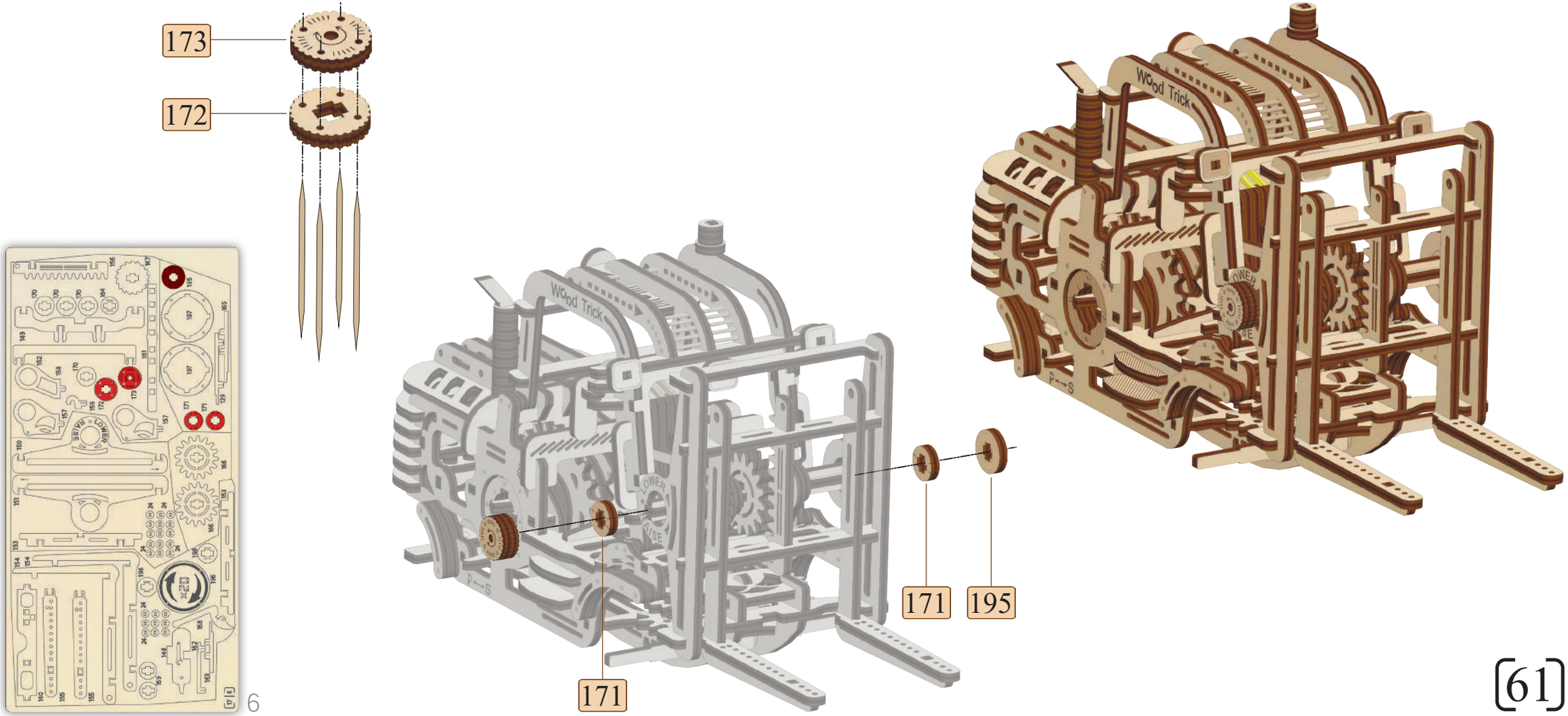
173
172
Wood Trick
171
195
171

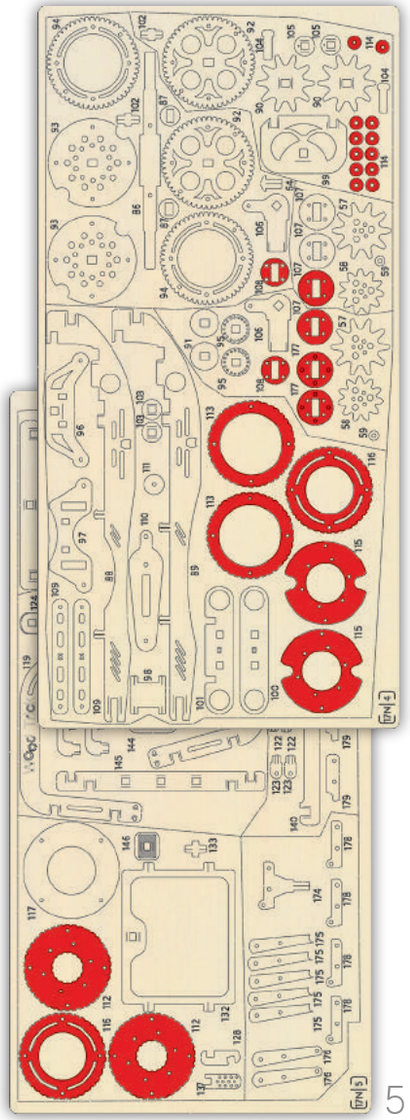

112

115

113

114

x5

177

108

107

B

2

116

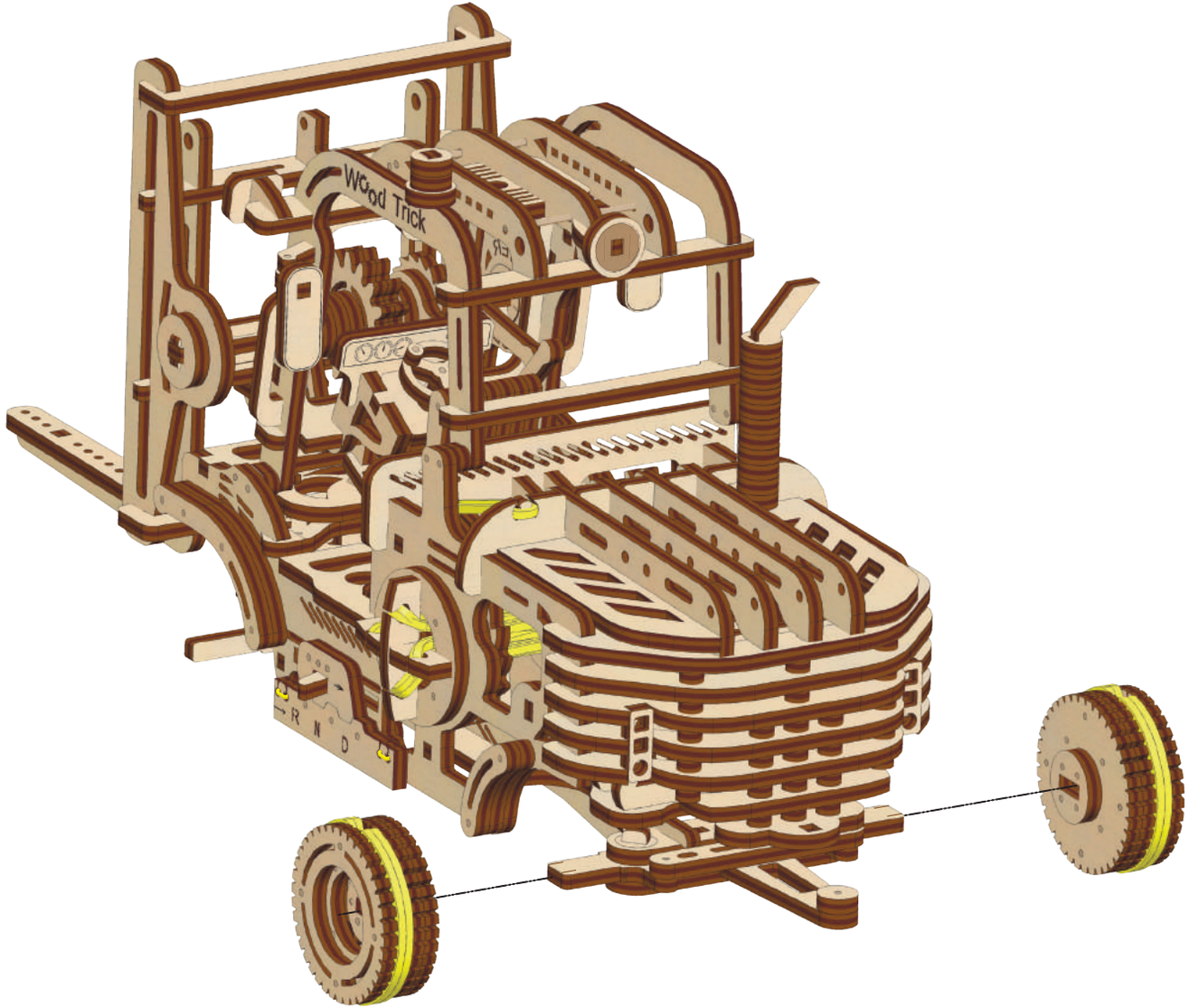
Wood Trick
R N D

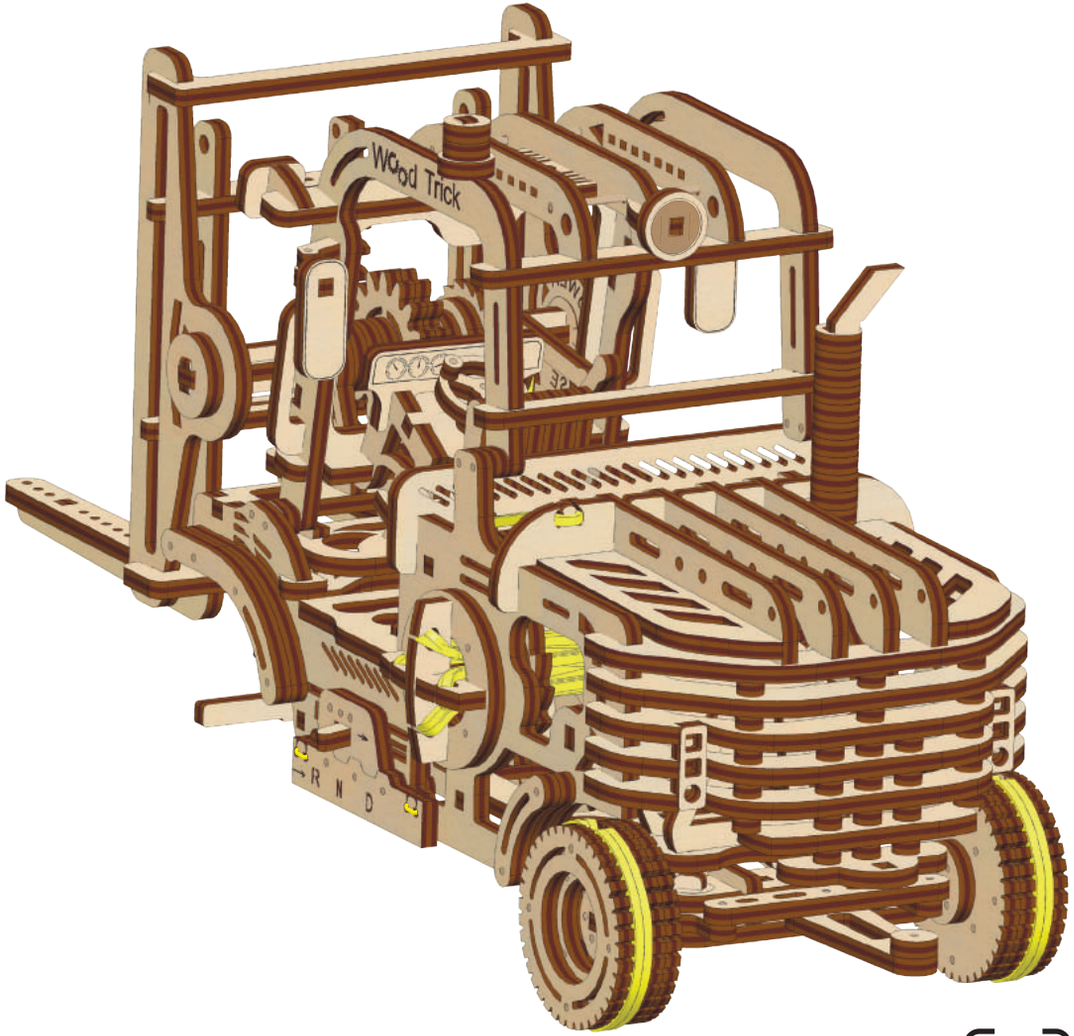
Wood Trick
R N D

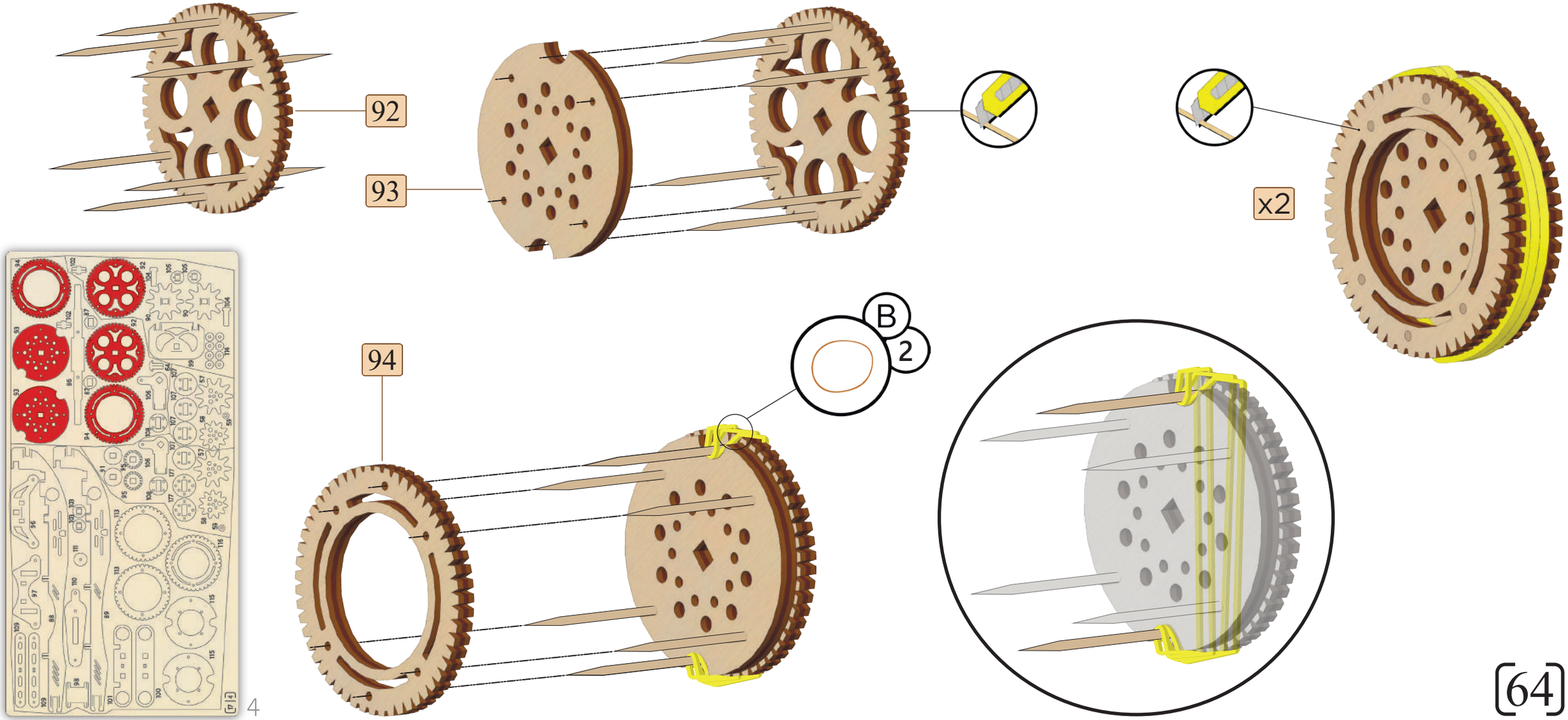
92
93
x2
94
B
2
4

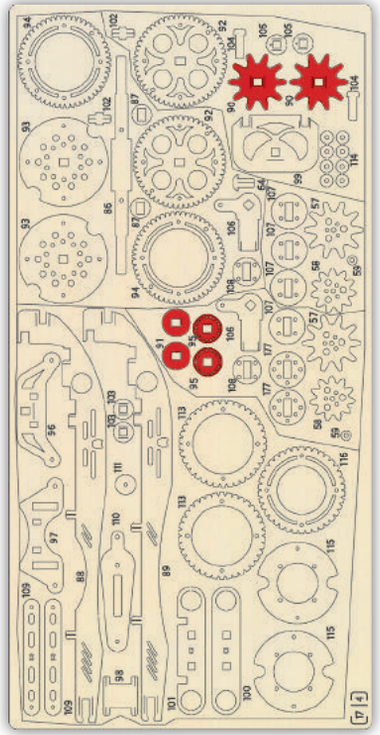

4

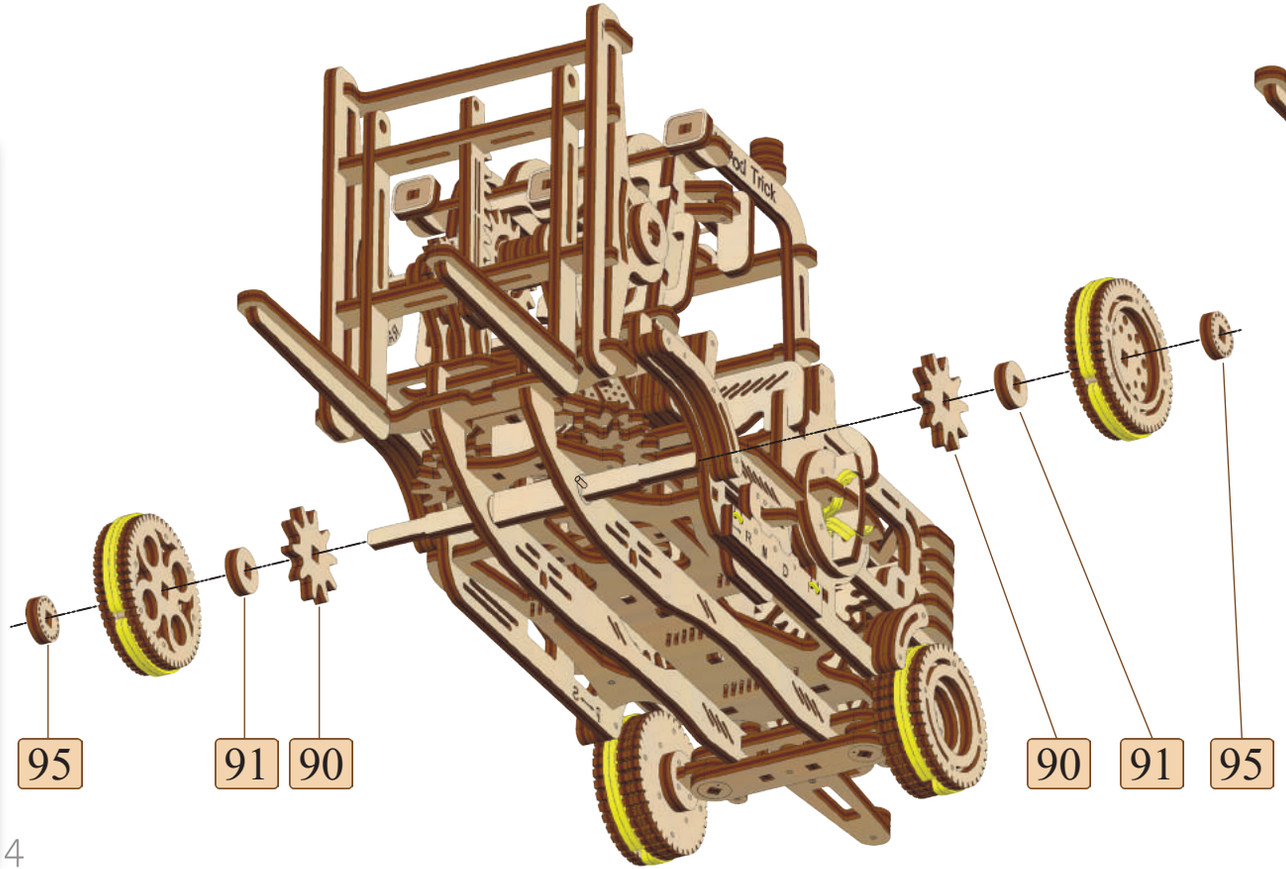

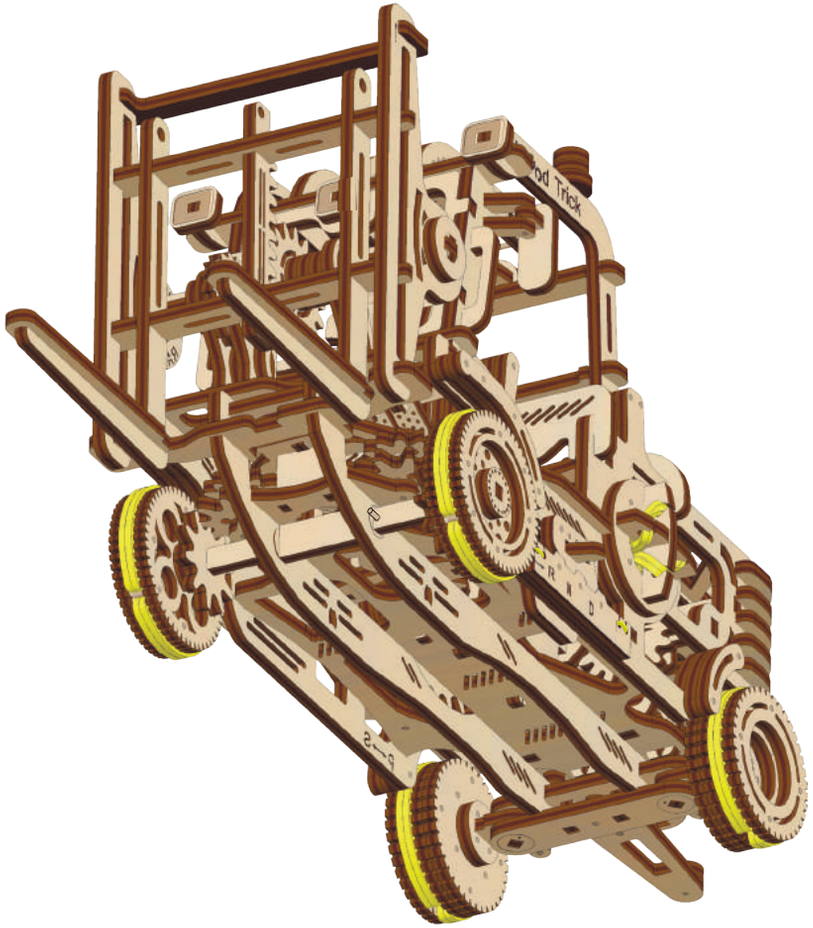

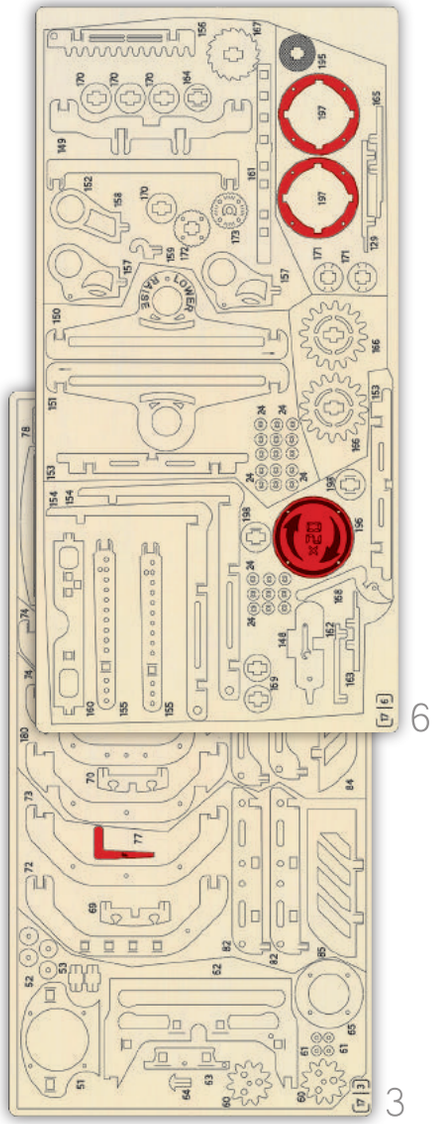
6
3

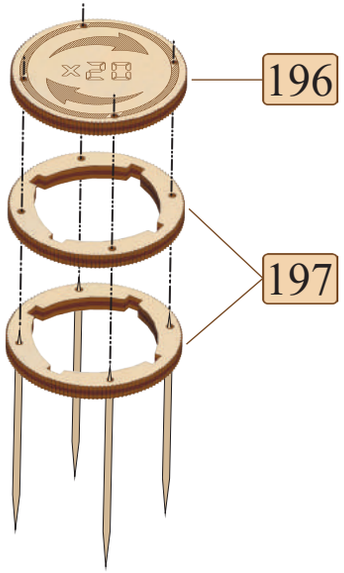
196
197

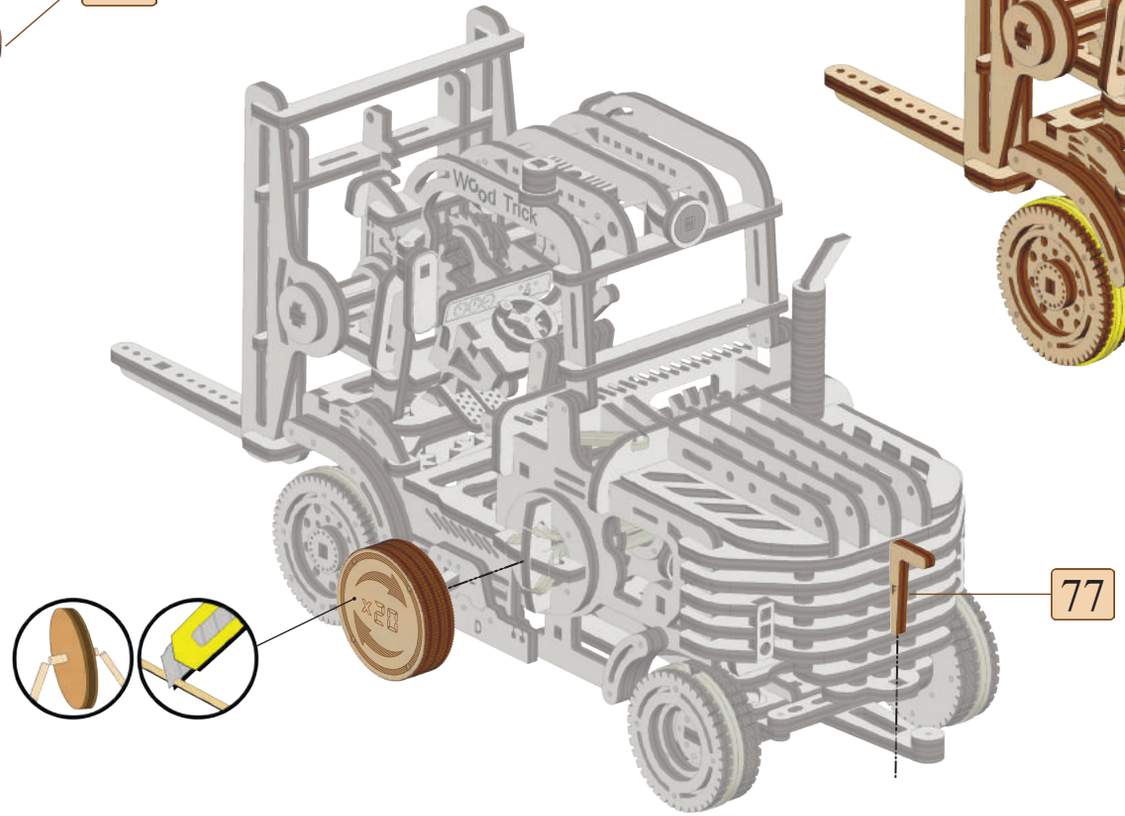
Wood Trick
77

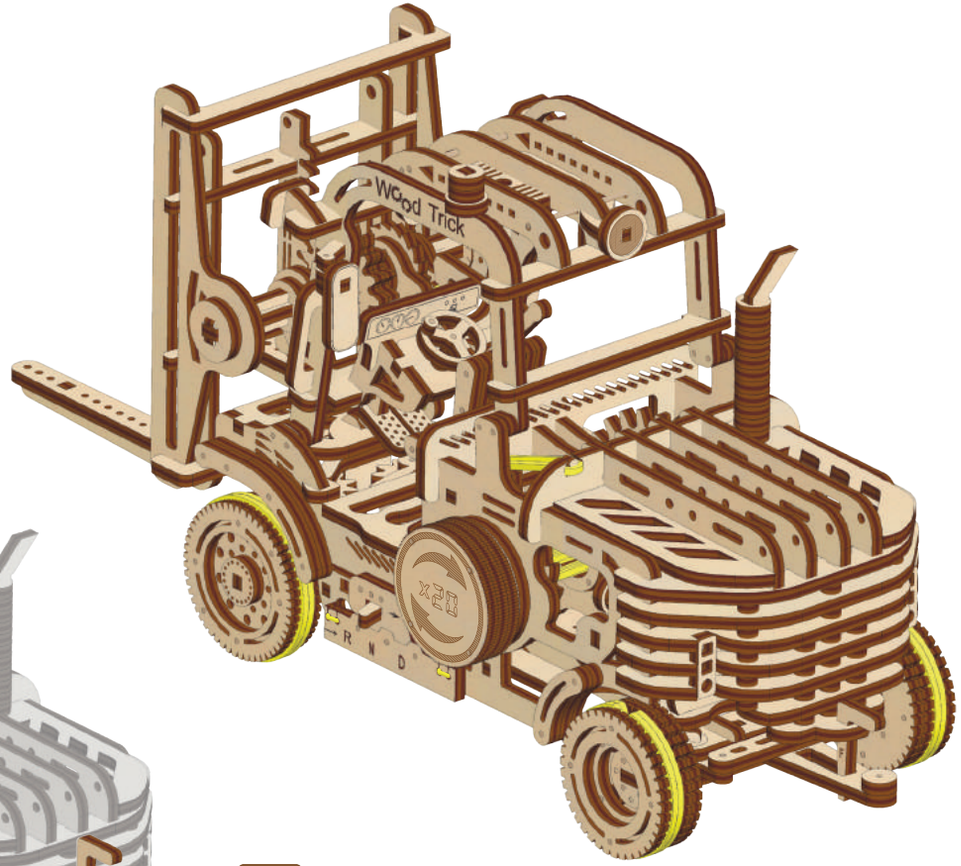
Wood Trick

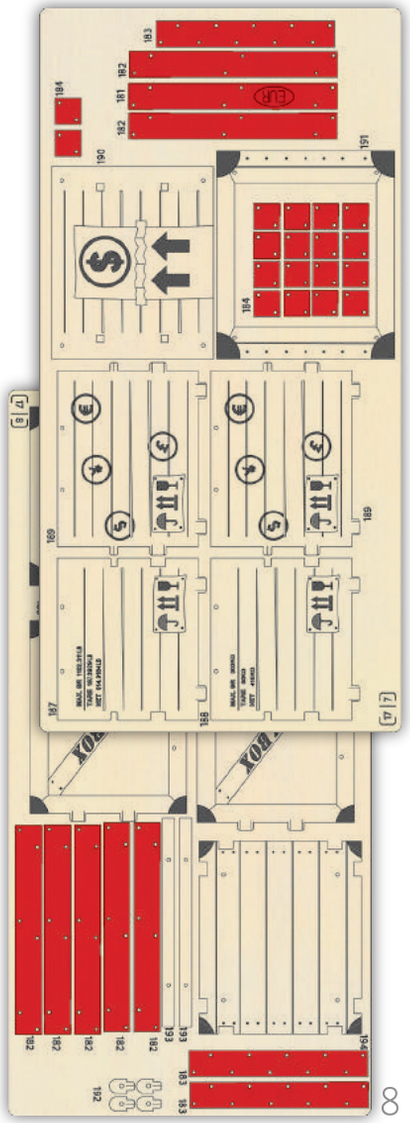
7
8

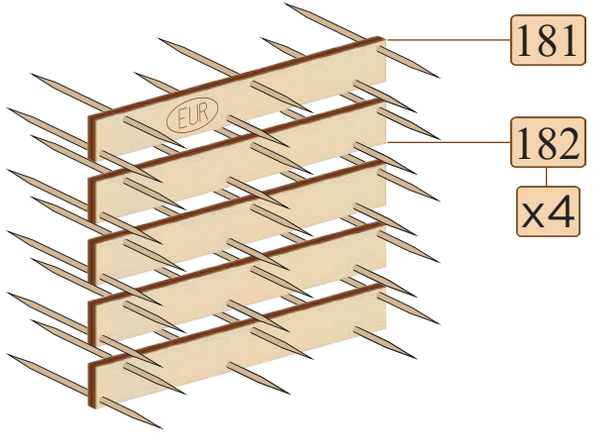
181
182
x4

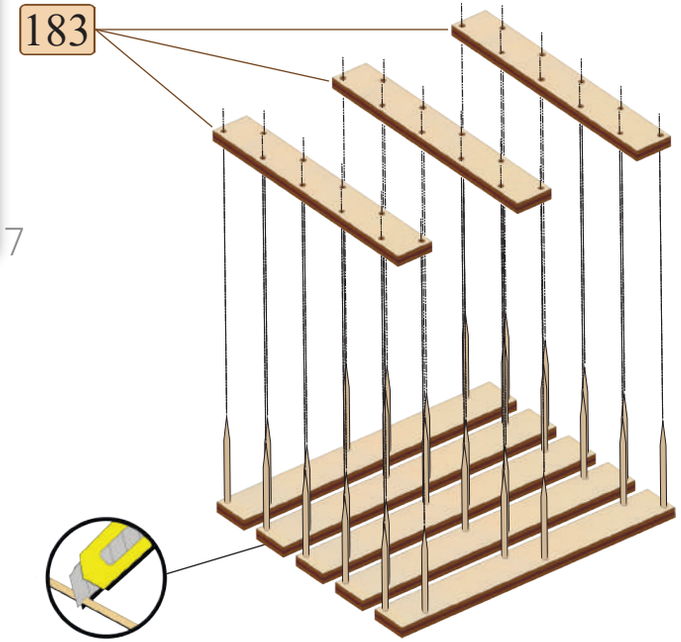
183

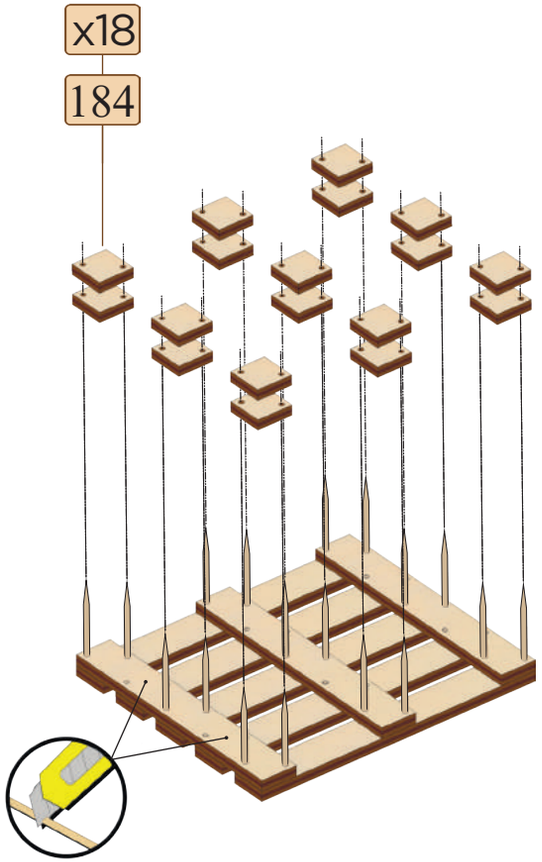
x18
184

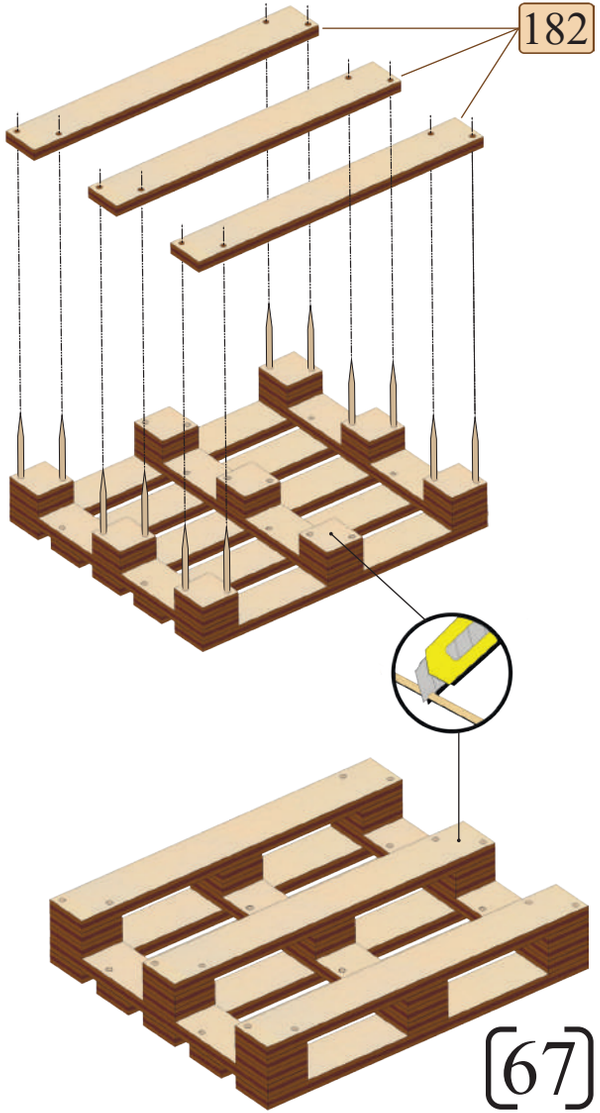
182

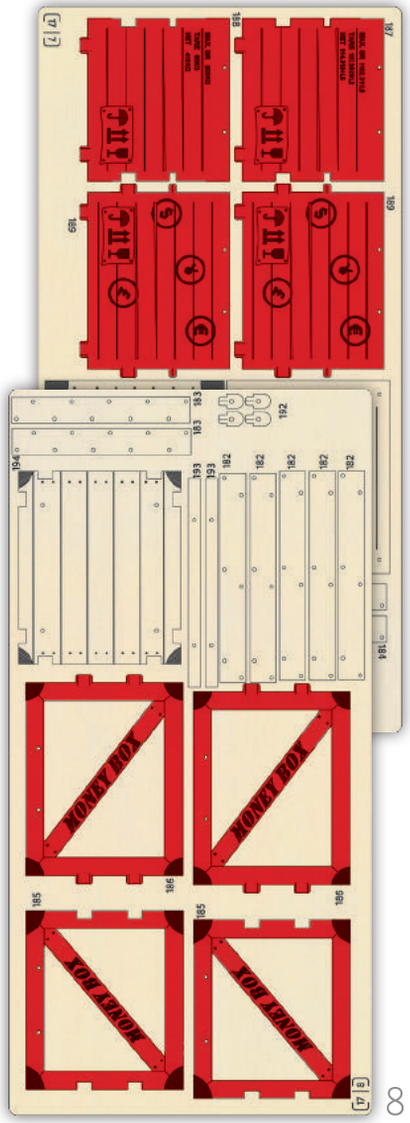
7
8
MONEY BOX
MONEY BOX
MONEY BOX
MONEY BOX

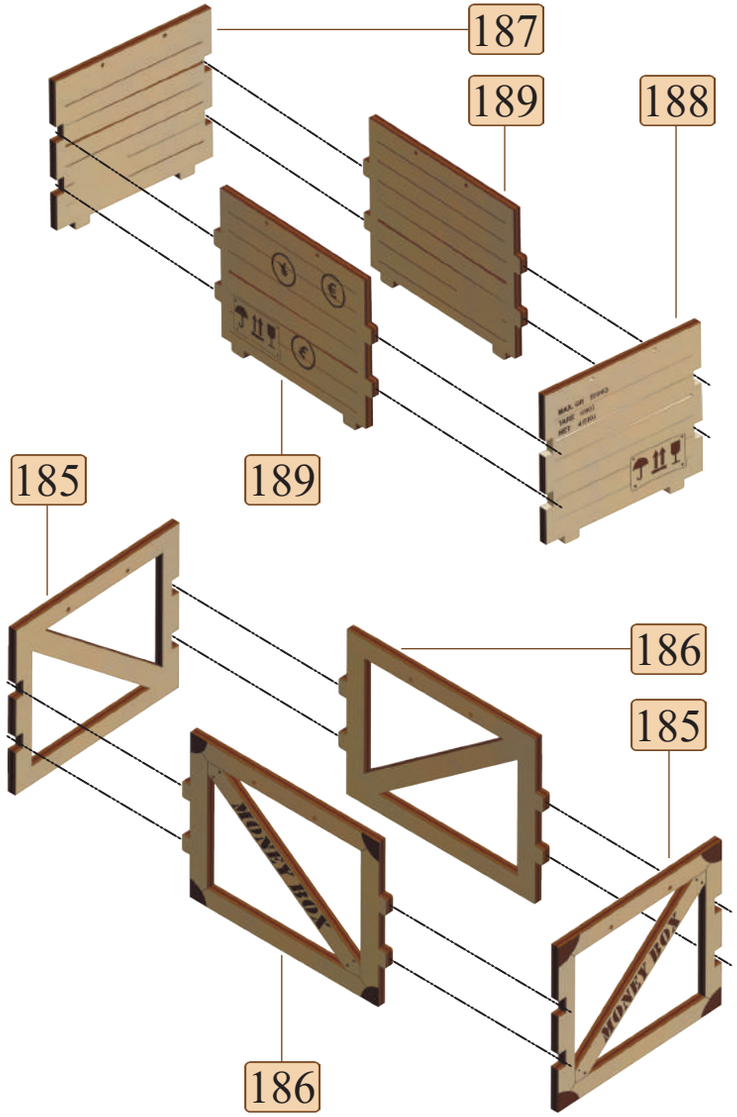
187
189
188
189
185
186
185
186
MONEY BOX
MONEY BOX

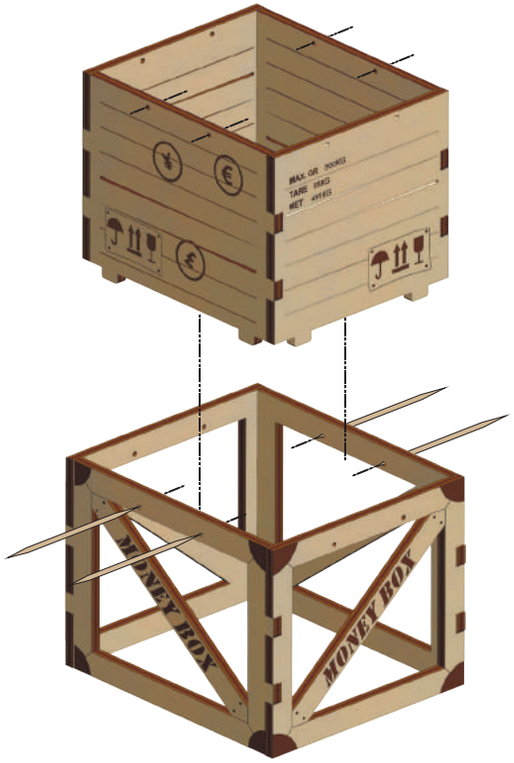
MONEY BOX
MONEY BOX

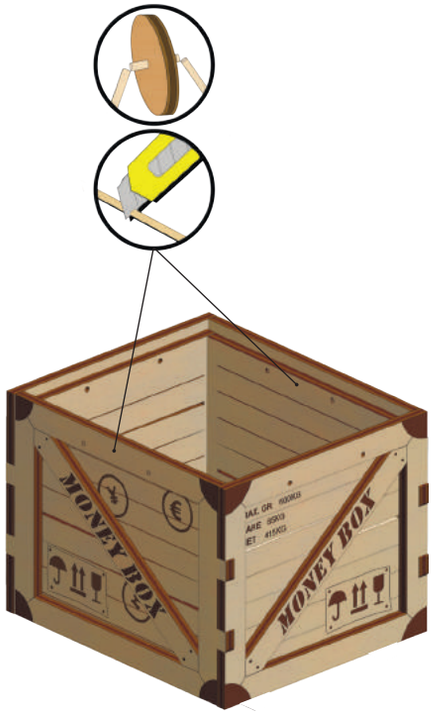
MONEY BOX
MONEY BOX

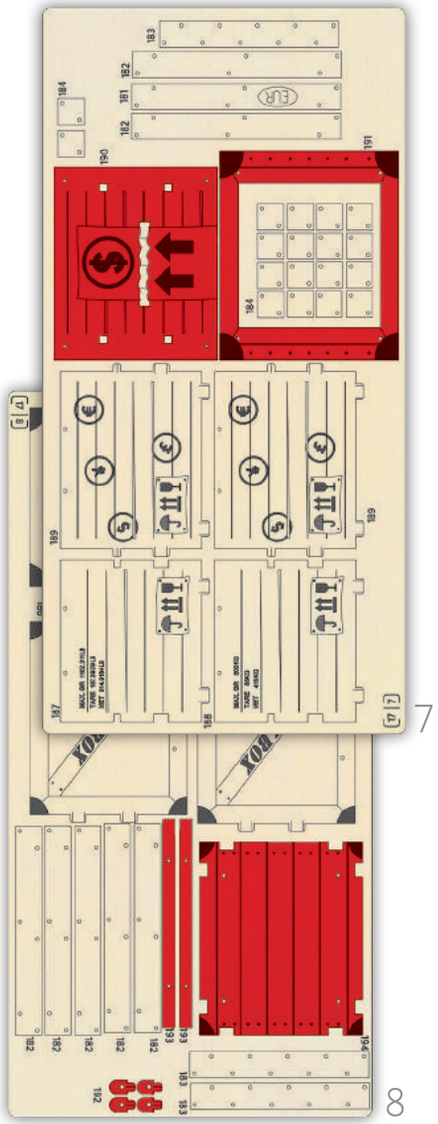
7
8

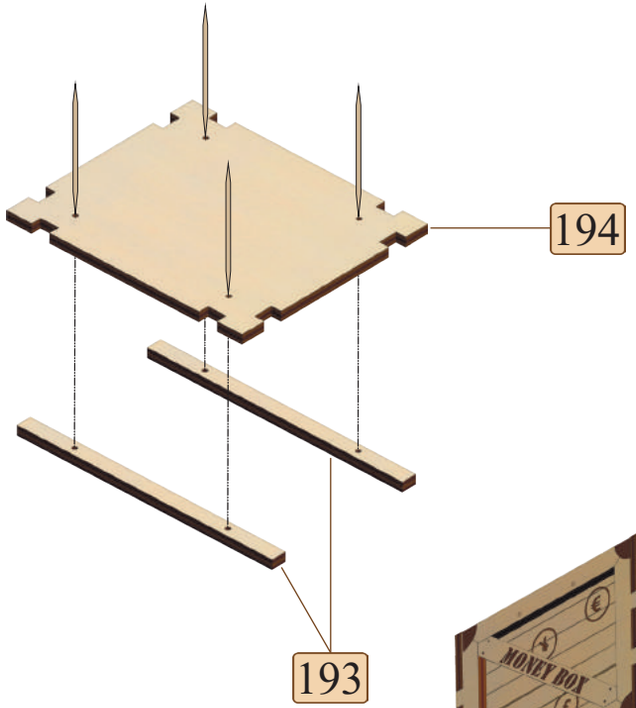
194
193

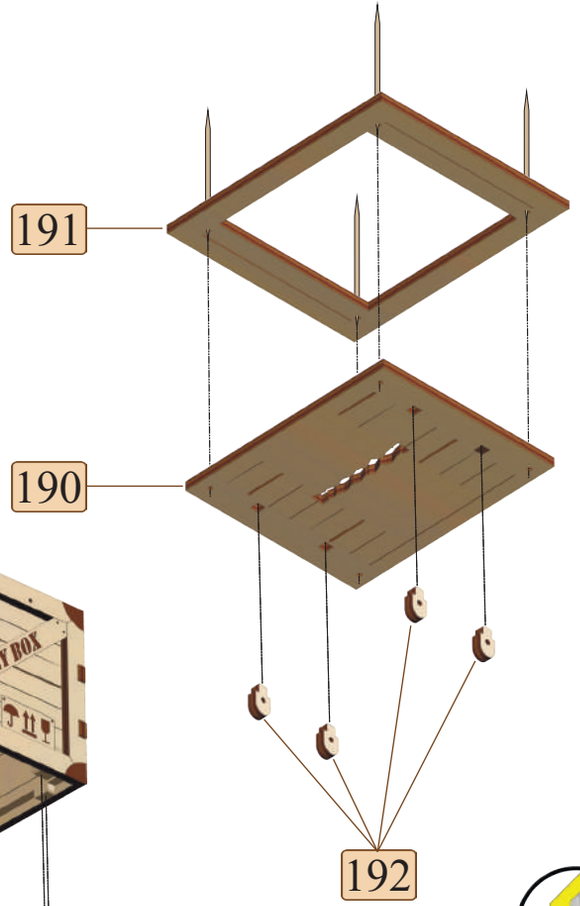
191
190
192

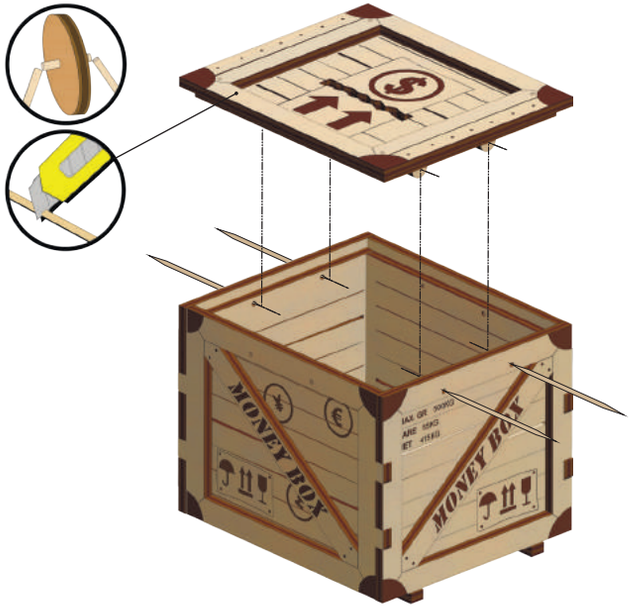
MONEY BOX

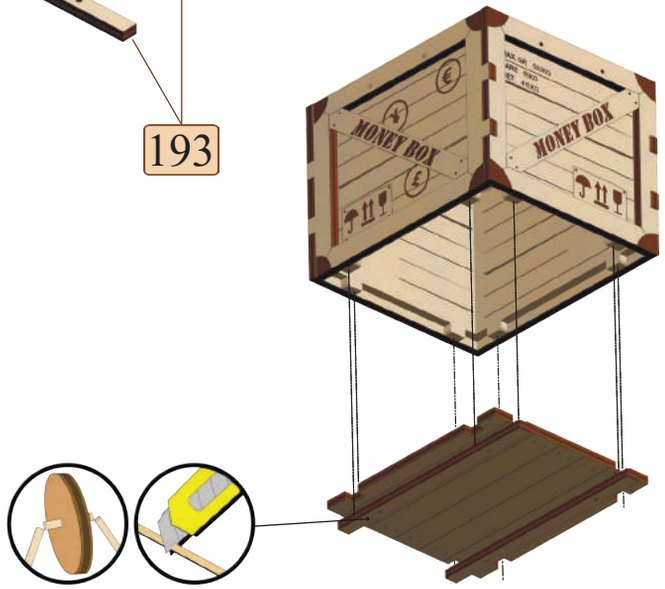
MONEY BOX
MONEY BOX

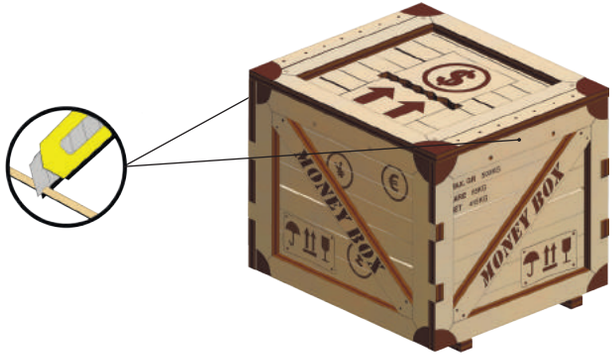
MONEY BOX

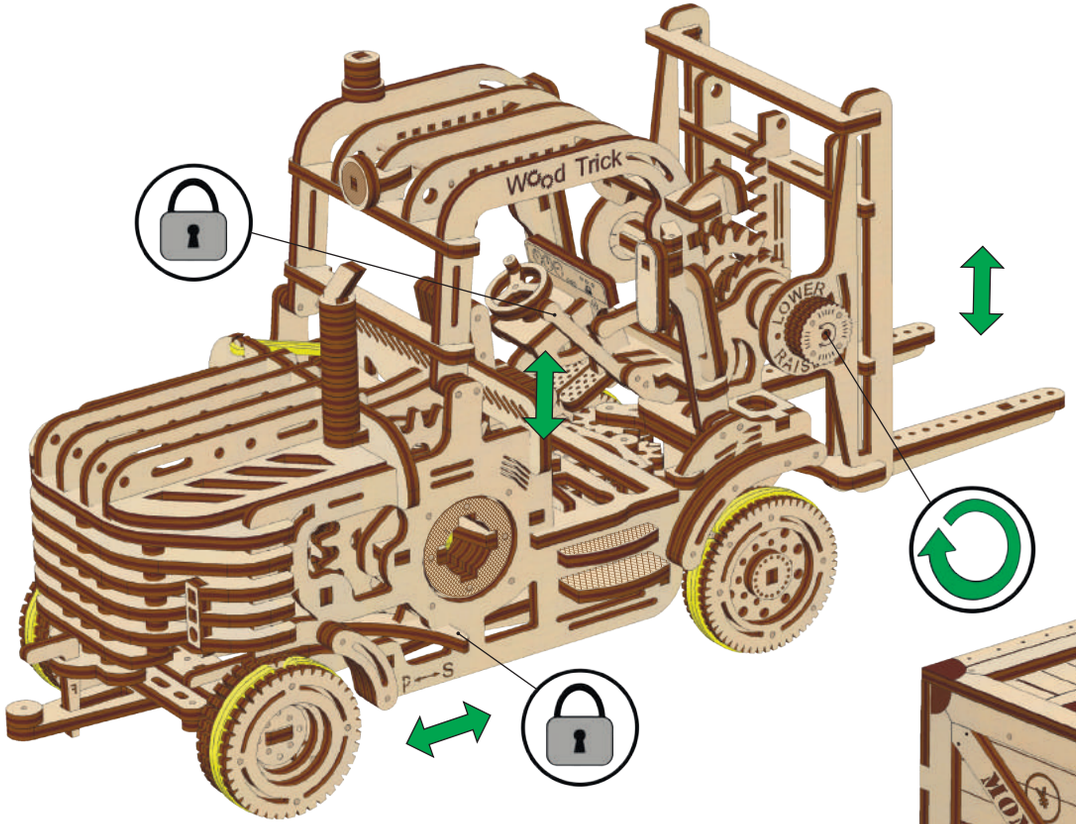
Wood Trick
LOWER
RAISE
P
S

MONEY BOX
MONEY BOX

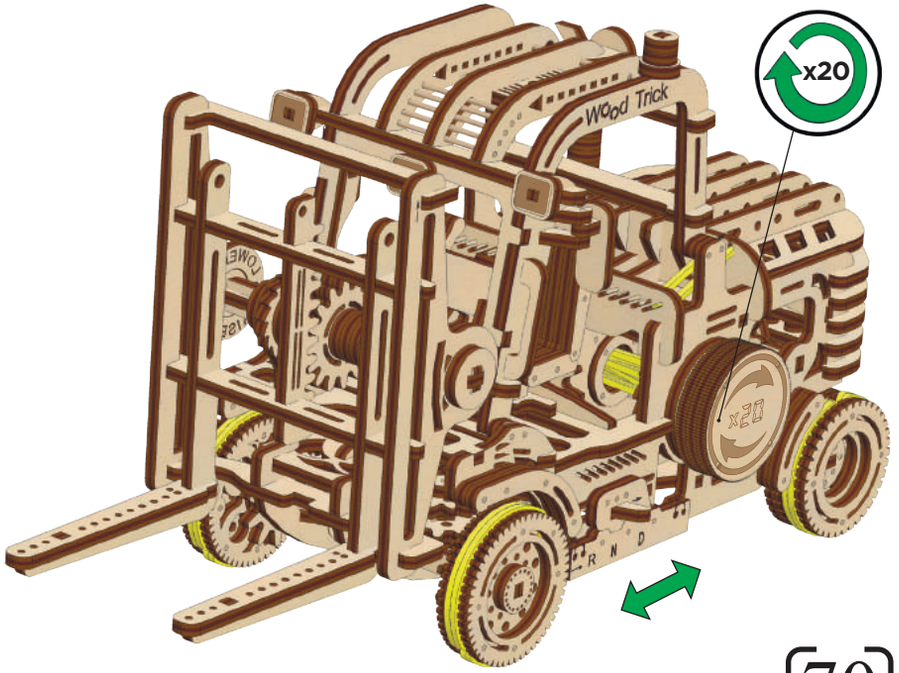
Wood Trick
x20
x20
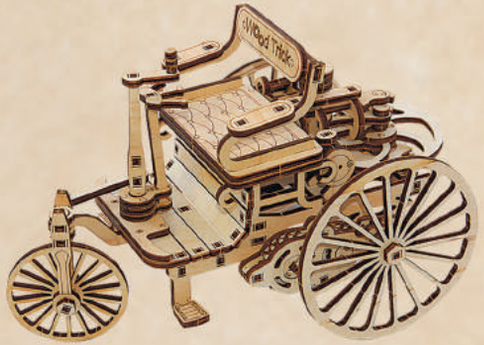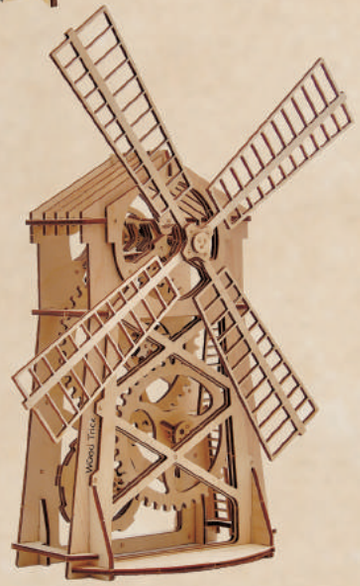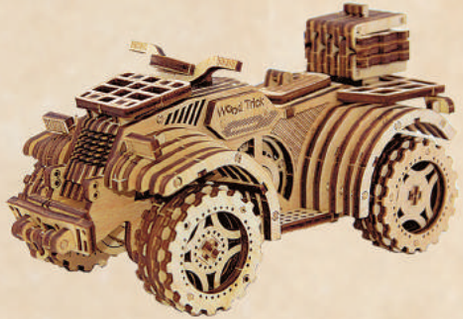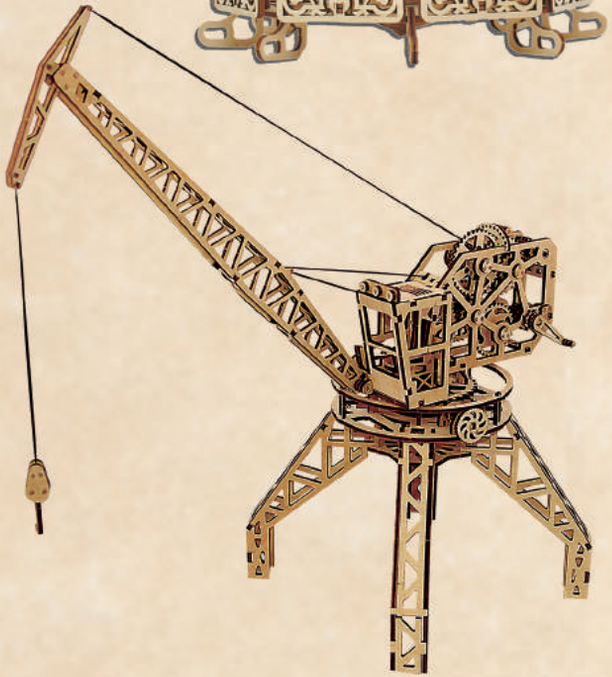
Wood Trick®