Wood Trick®

A NEW WORLD OF ART

ATV

MECHANICAL 3D PUZZLE

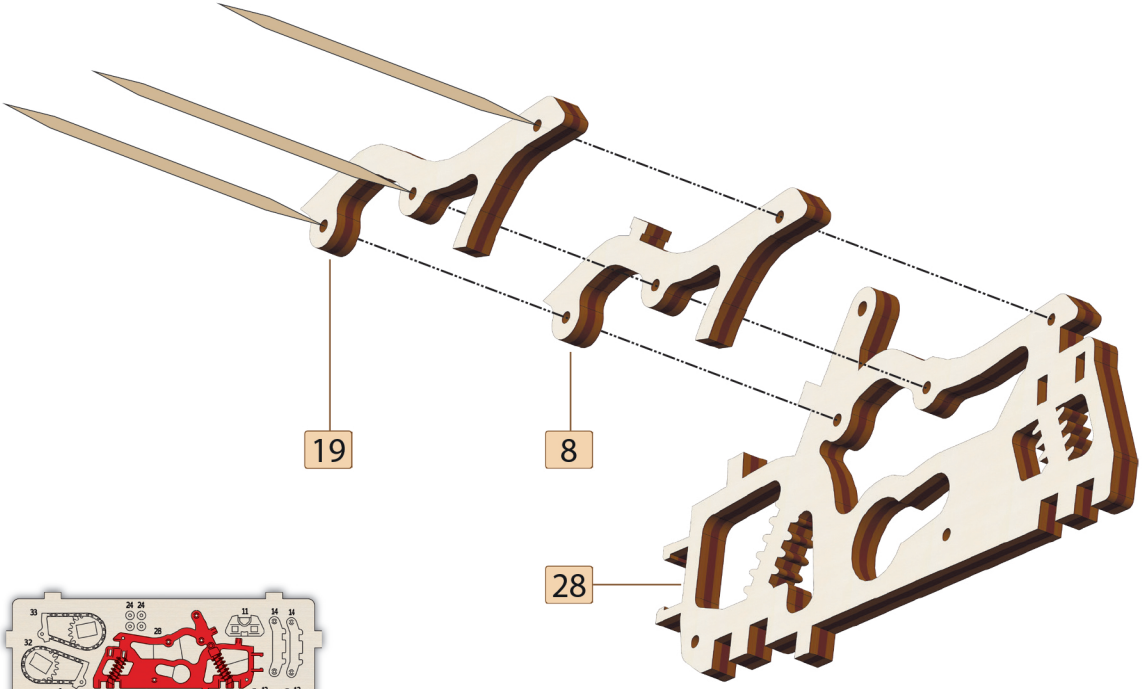
19
8
28

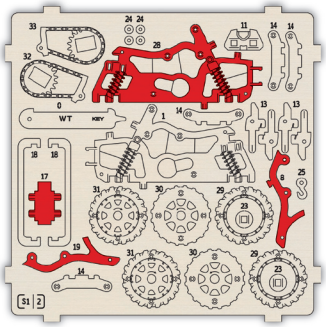
2

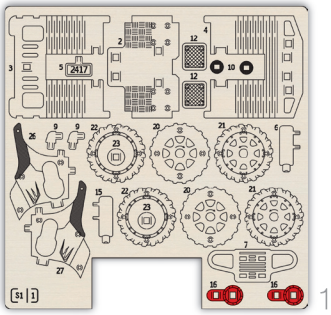
1

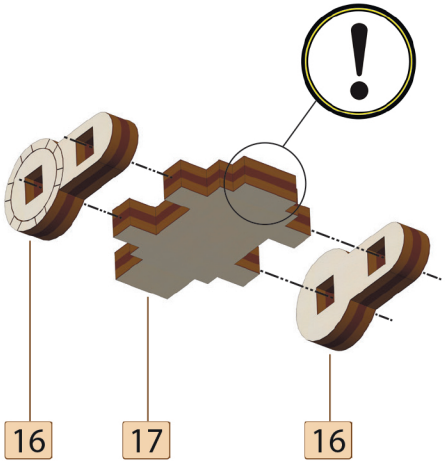
16
17
16

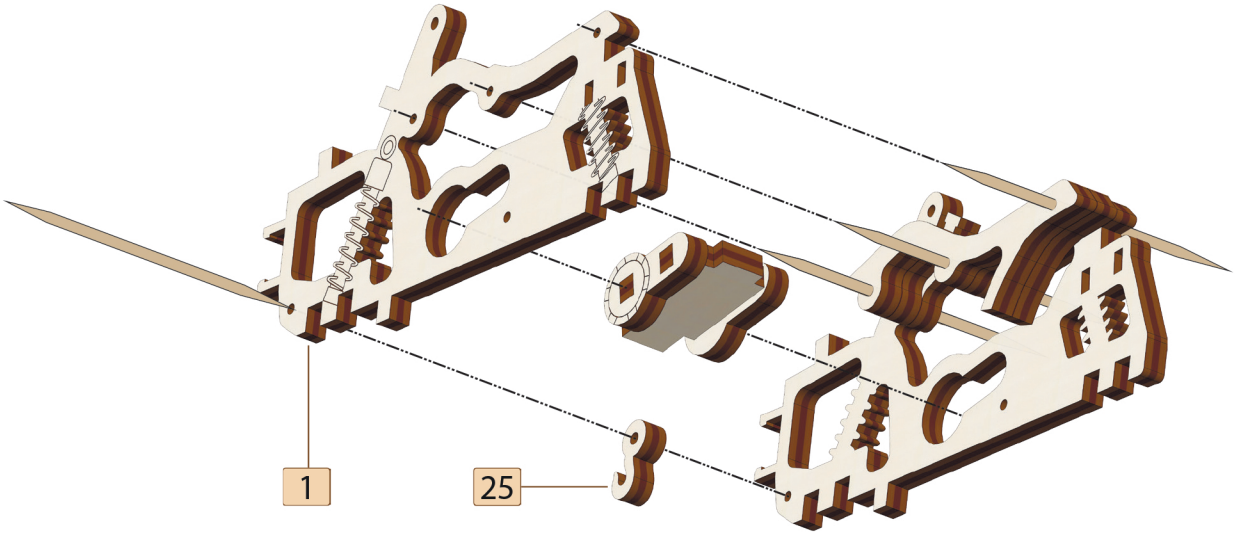
1
25

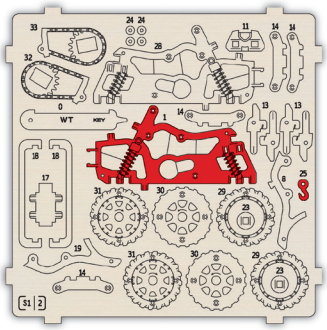

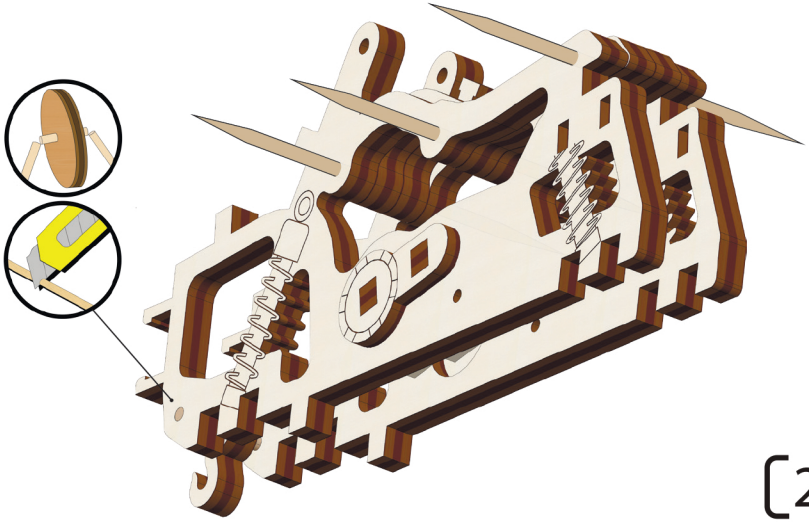

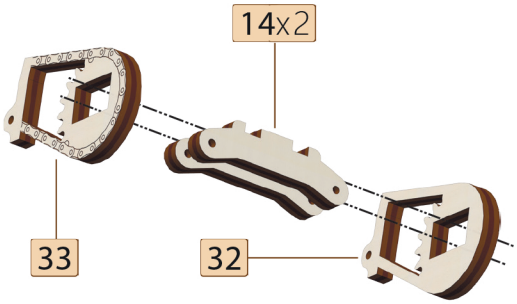

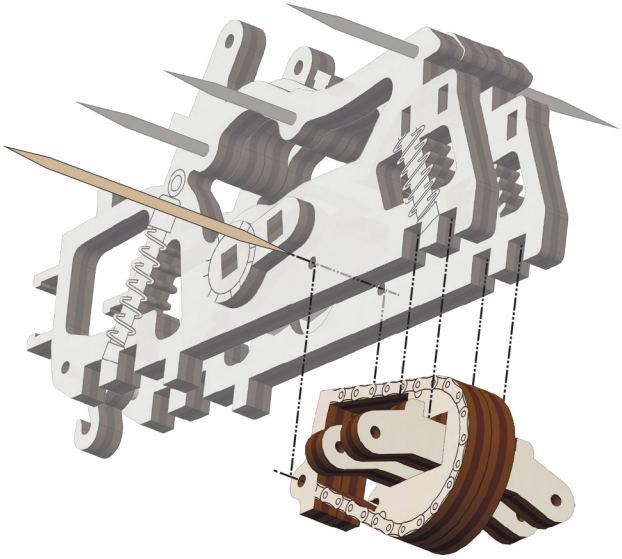

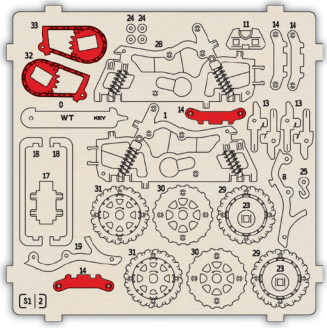

2

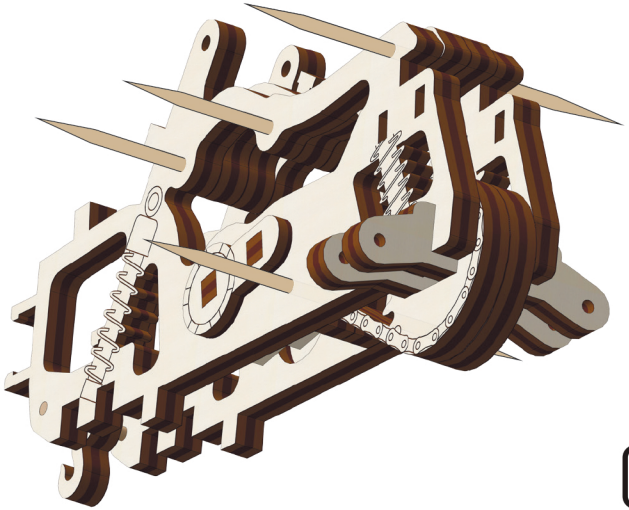

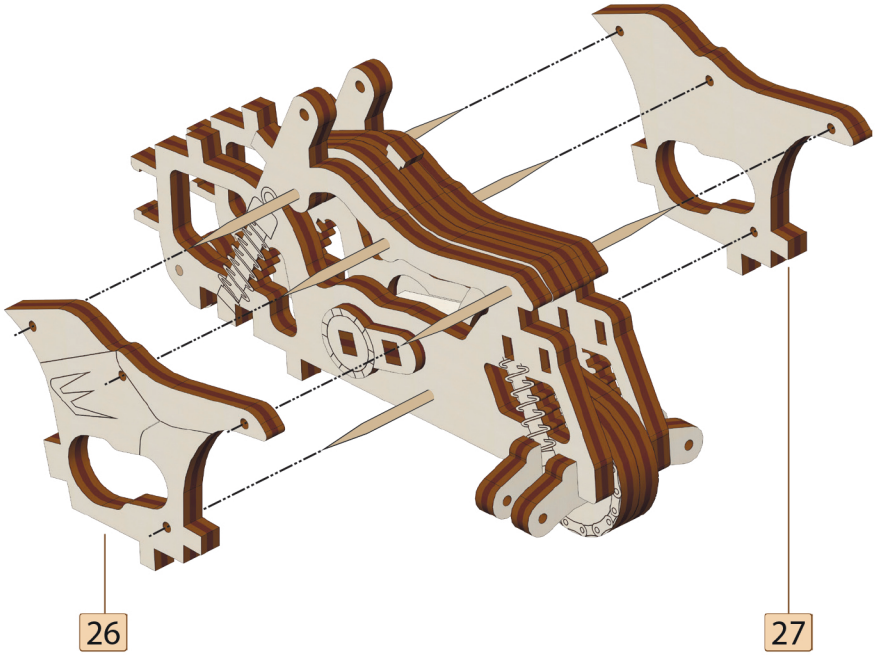

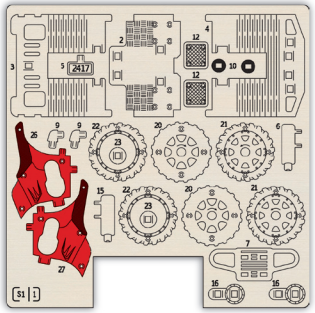

1

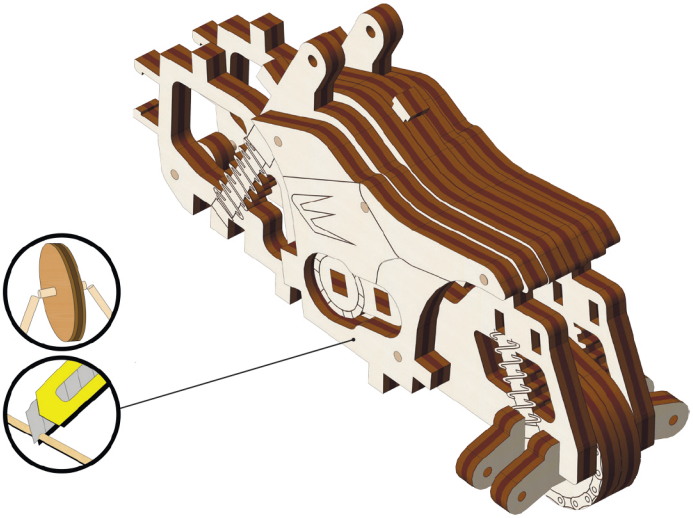

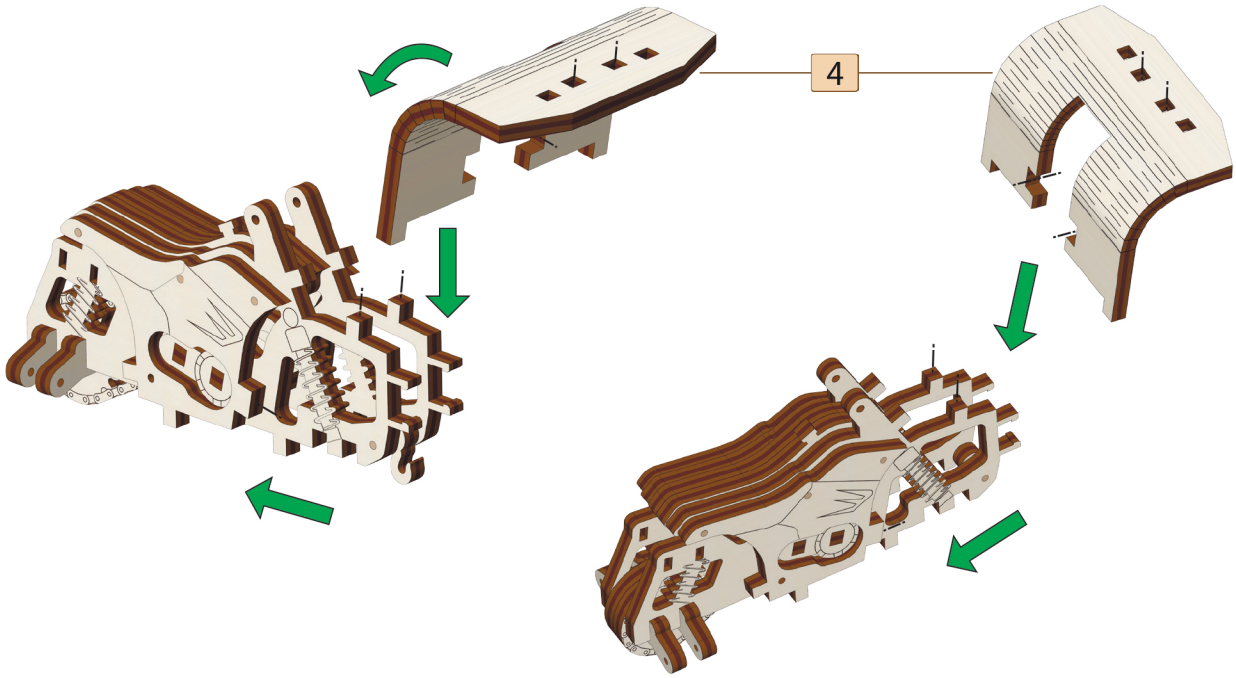

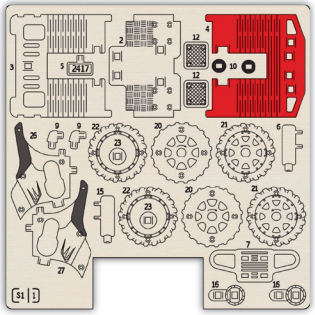

1

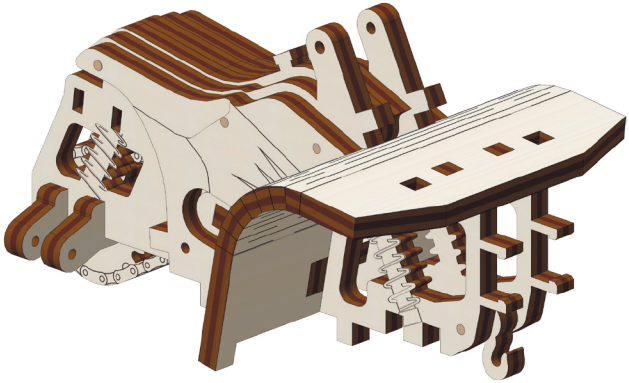

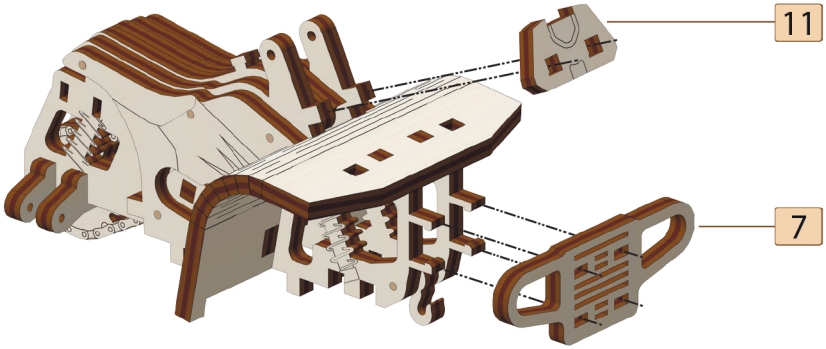
11
7

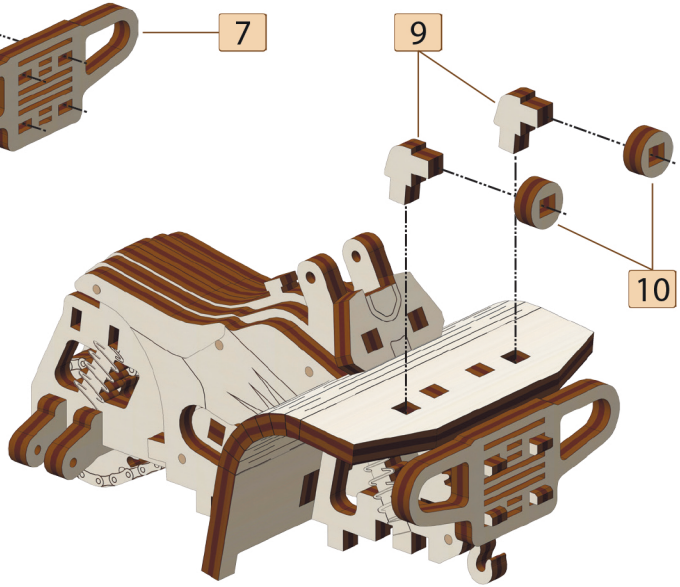
9
10

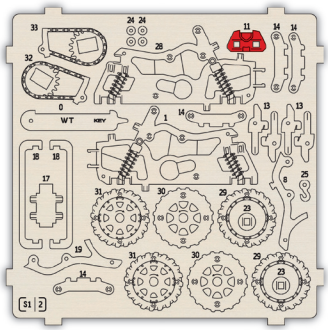
2

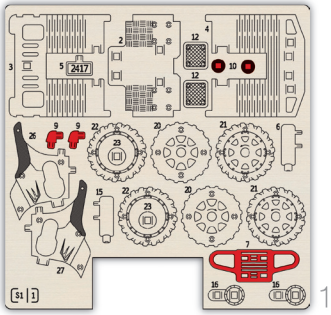
1

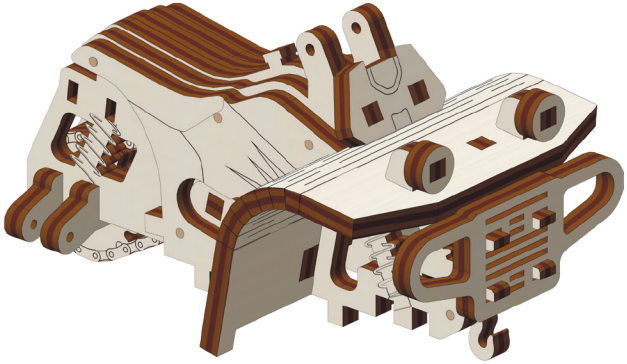

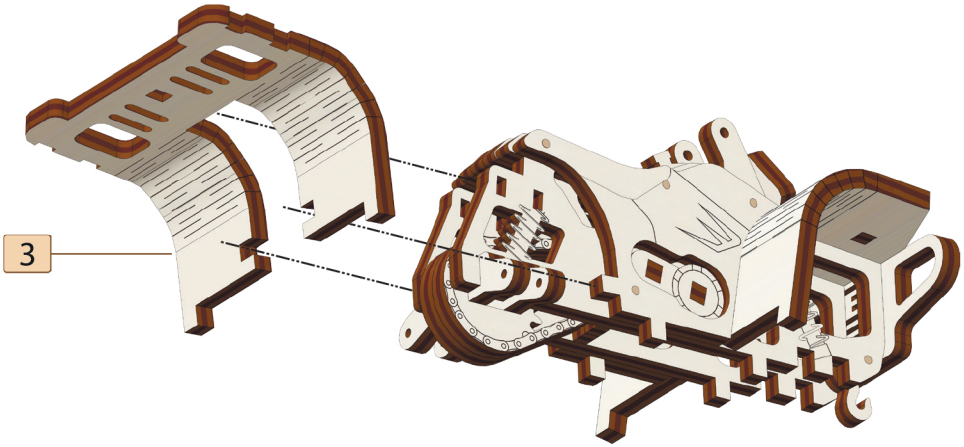

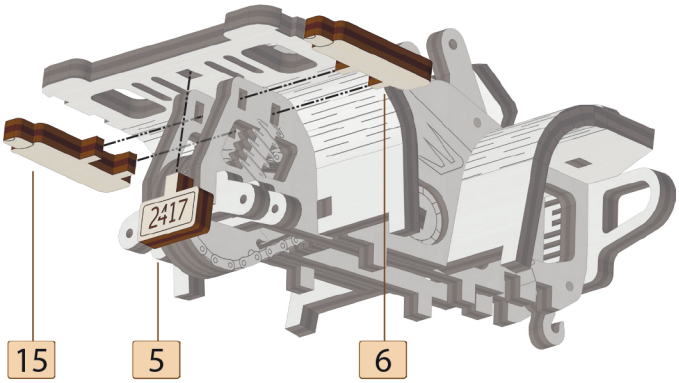

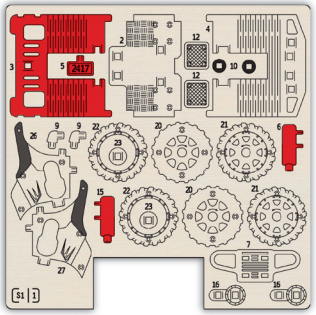

1

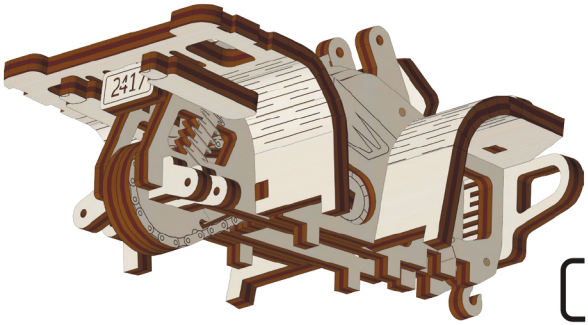

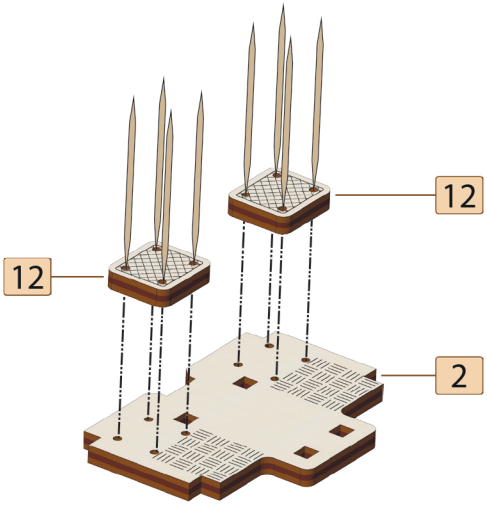

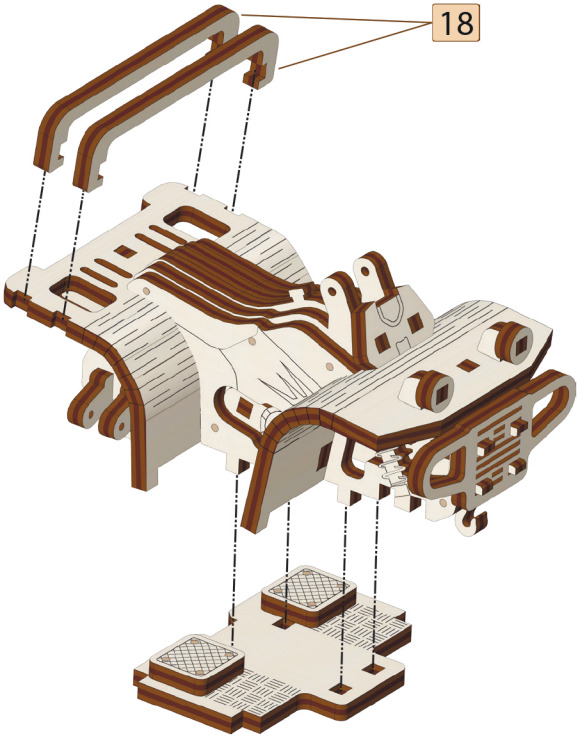

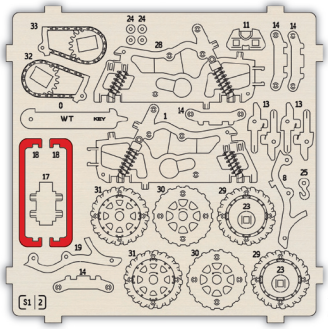

2

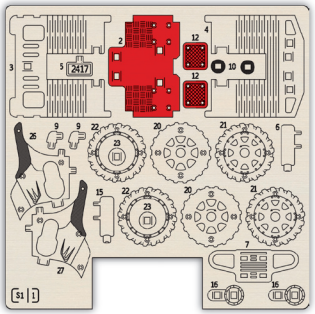

1

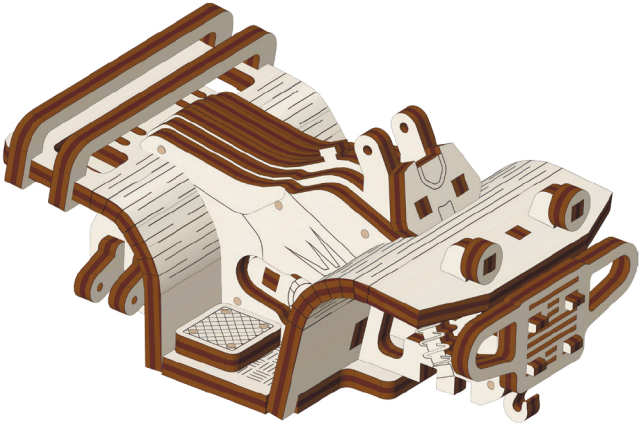

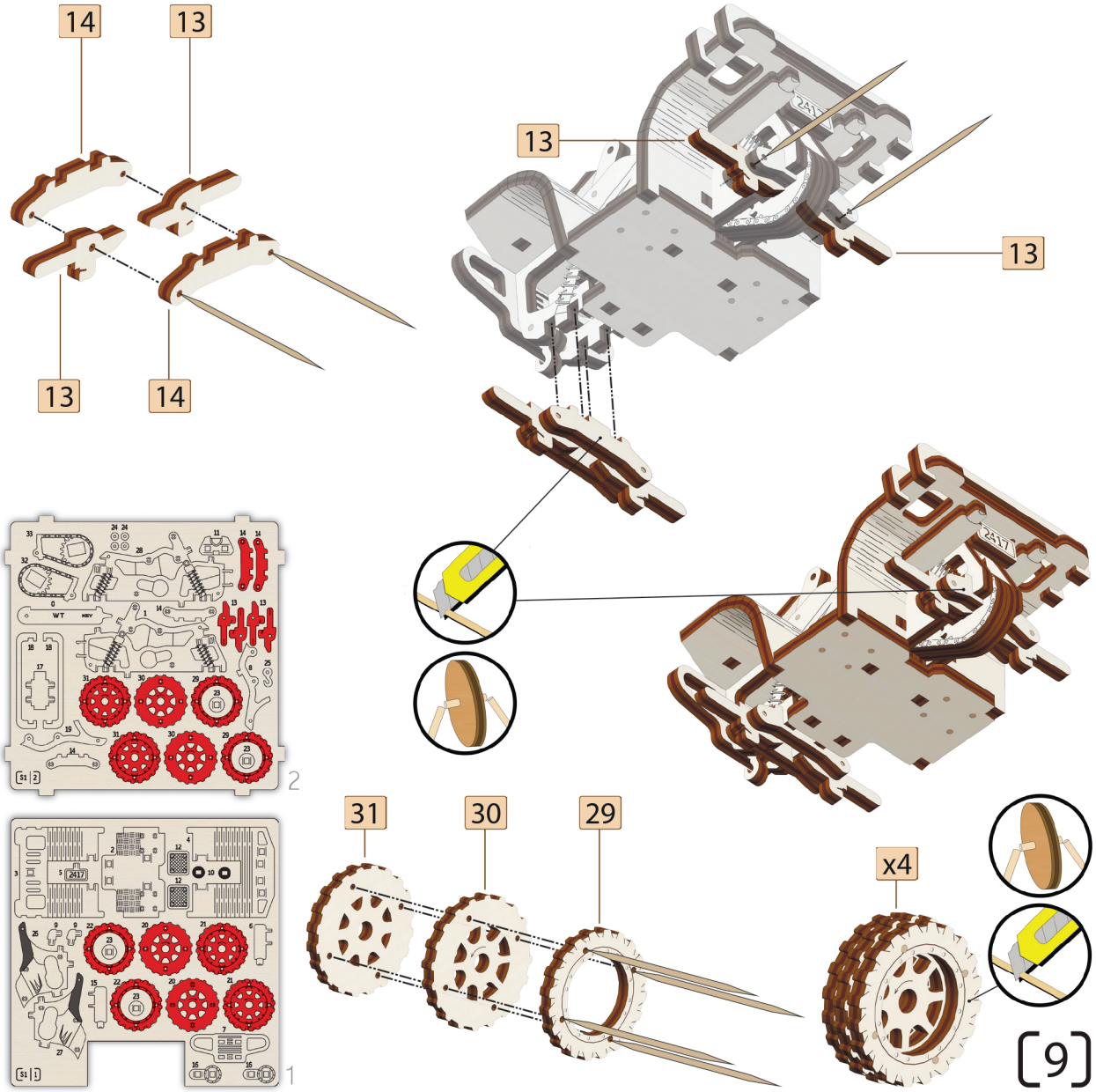
14
13
13
14
13
13
2
1
31
30
29
x4

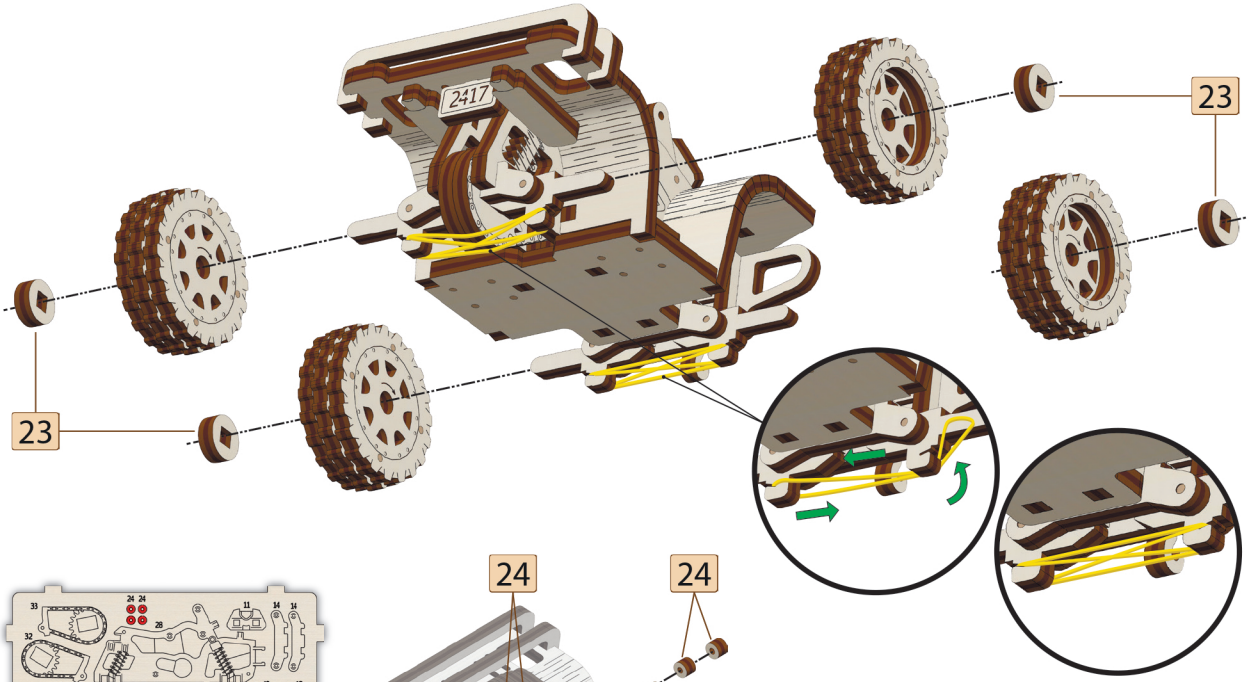

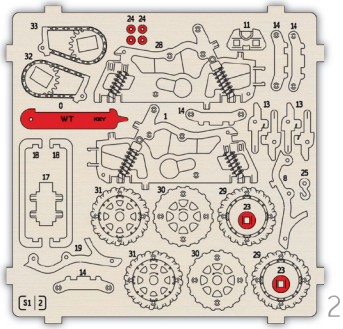

2

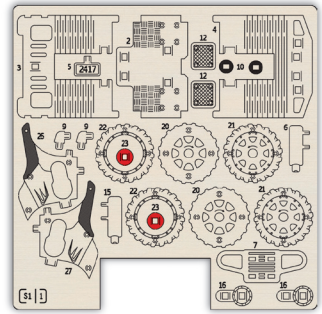

1

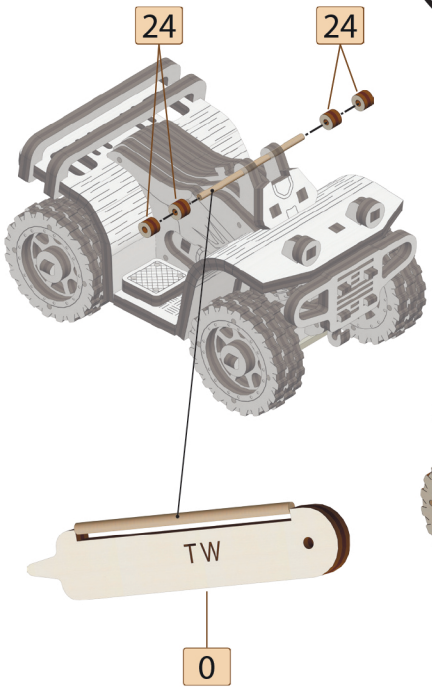

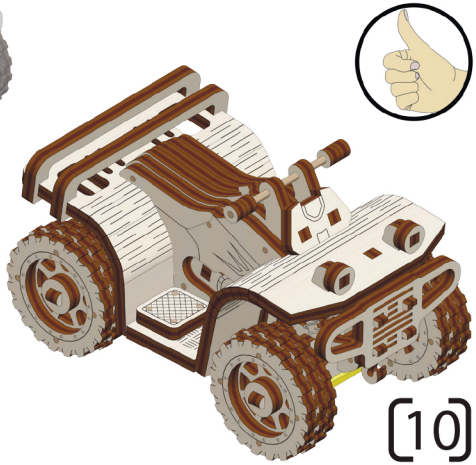

Wood Trick
NM 183
BUY TWO ADDITIONS FOR BIG RIG
Wood Trick
A NEW WORLD OF ART
INTERIOR COLLECTION
CAR TRAILER & JEEP
TANK TRAILER
MECHANICAL 3D PUZZLE BIG RIG
FROM AMUSEMENT TO MECHANICS