Wood Trick®

A NEW WORLD OF ART

MECHANICAL 3D PUZZLE CABRIOLET

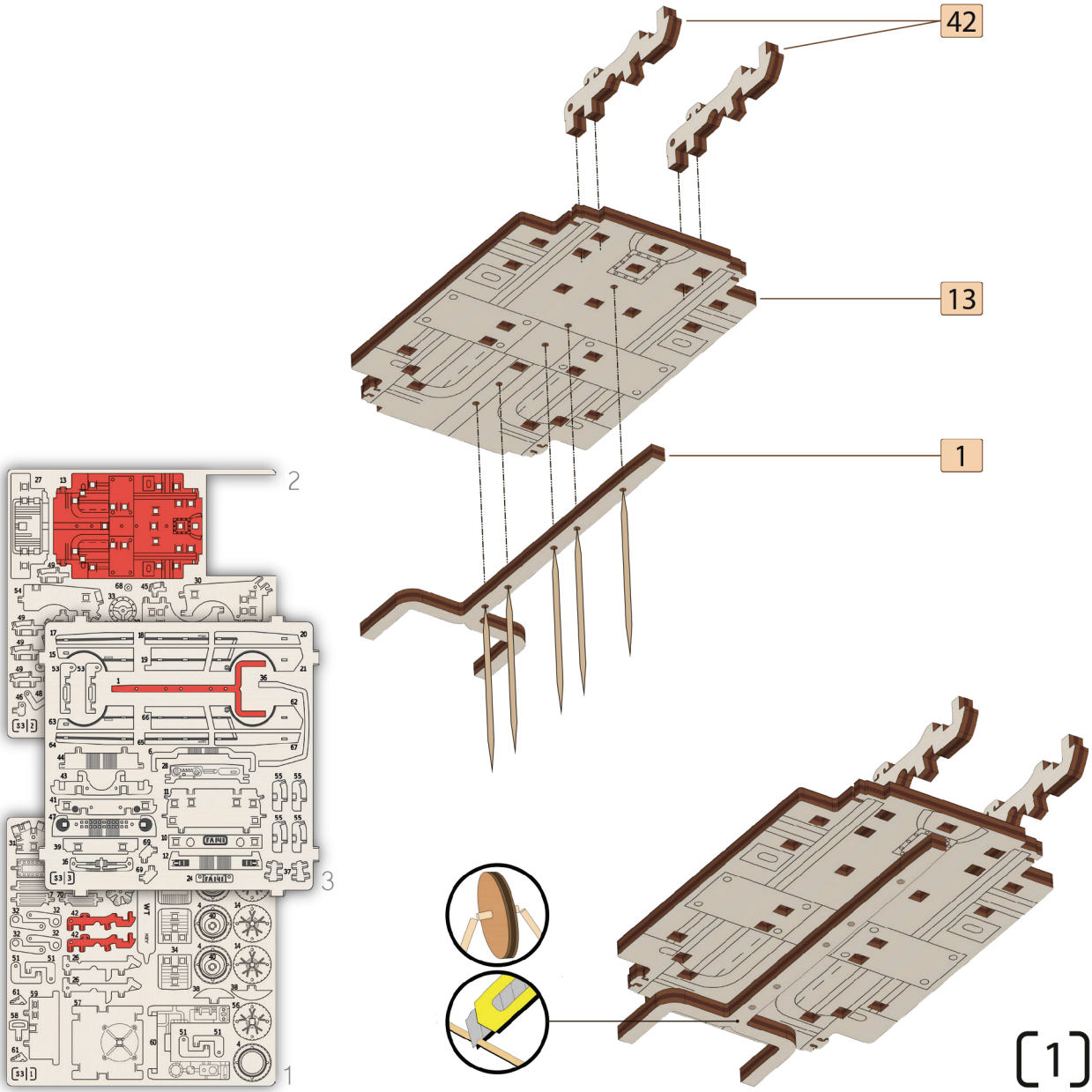
42
13
1
2
3
1
[1]

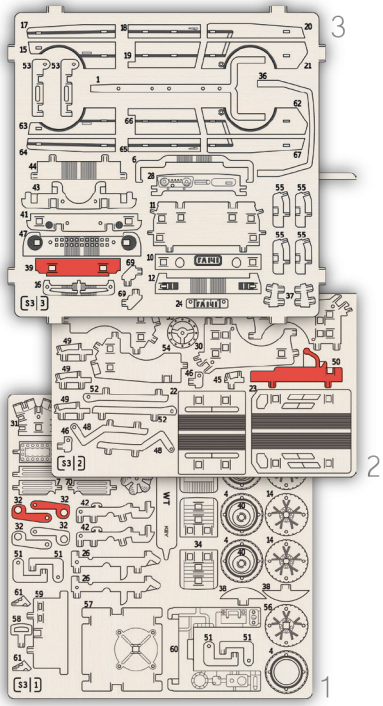
3
2
1

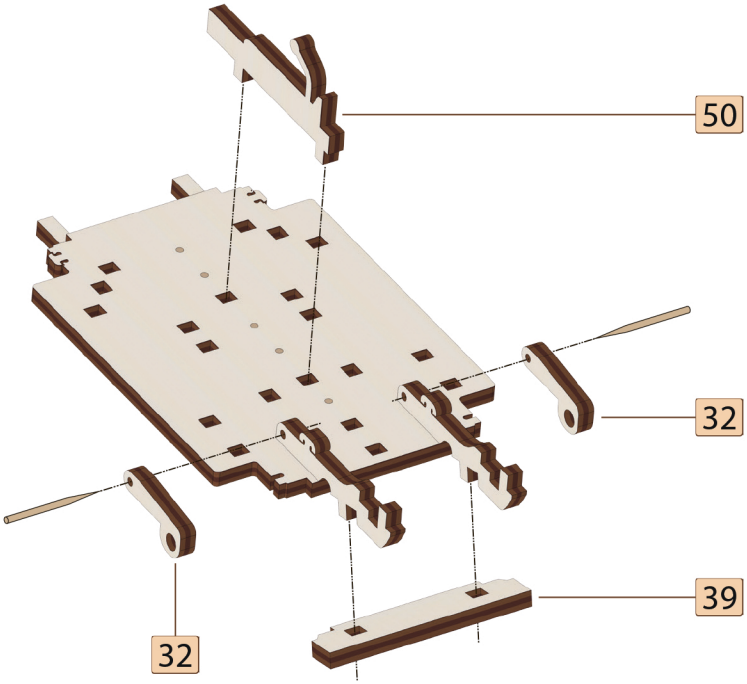
50
32
32
39

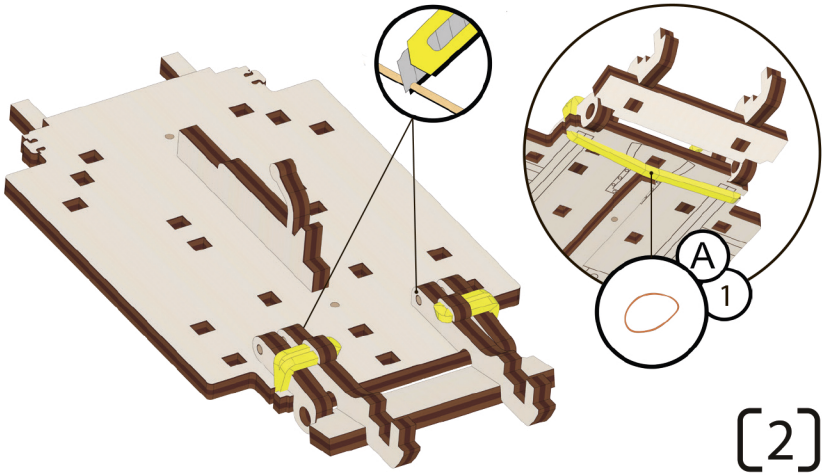
A
1

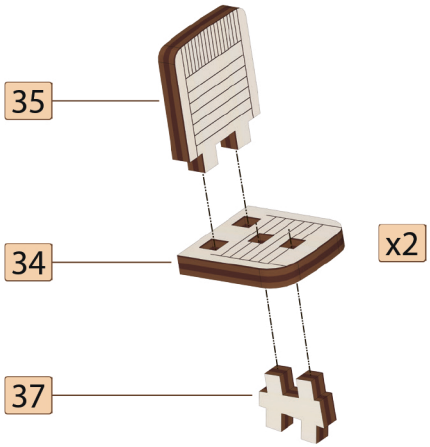
35
34
37
x2

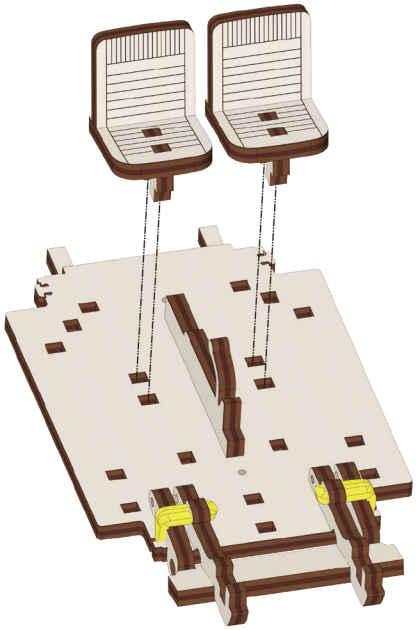

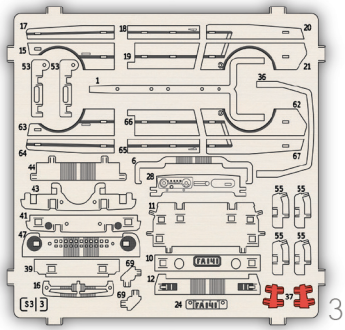
3

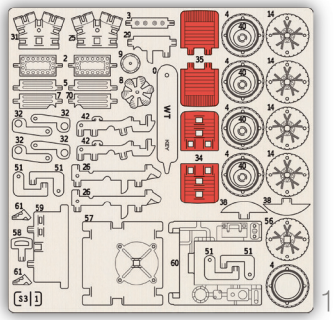
1

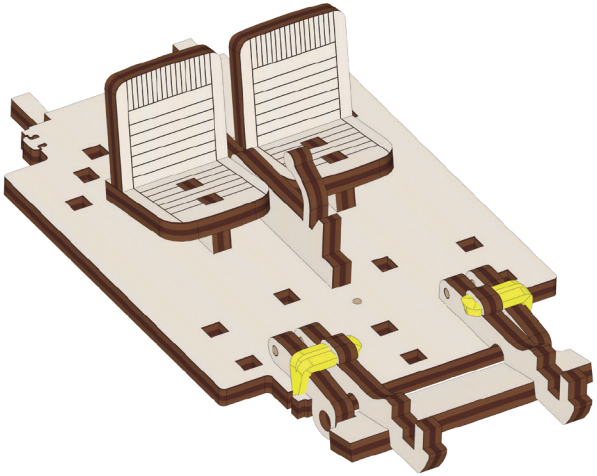

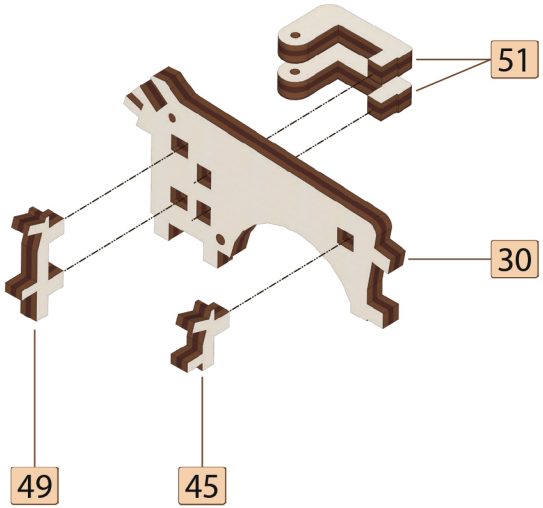

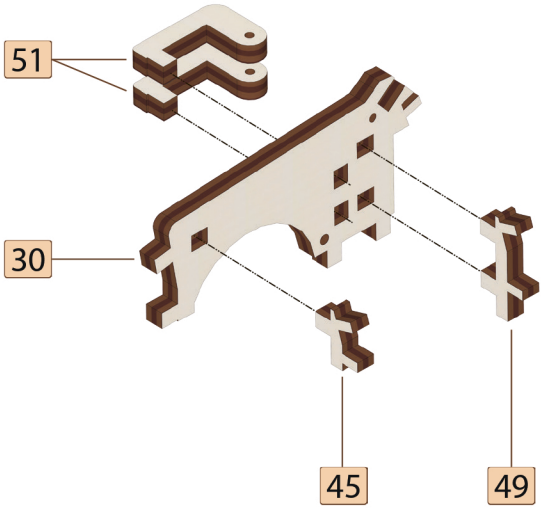

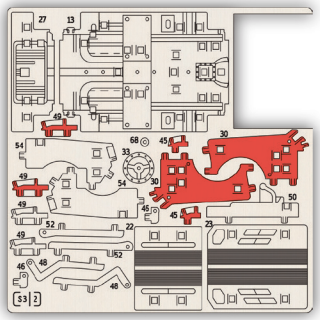

2

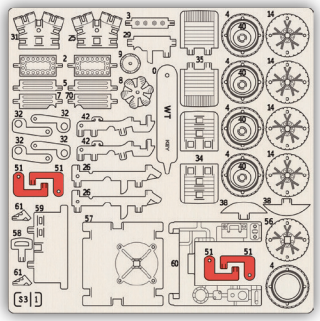

1

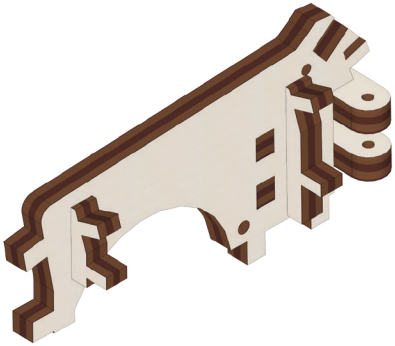

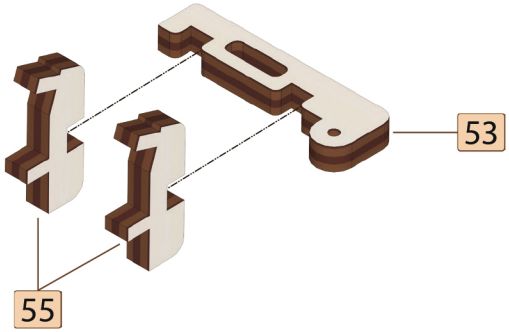
53
55

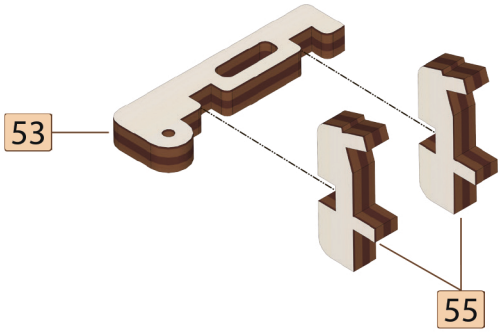
53
55

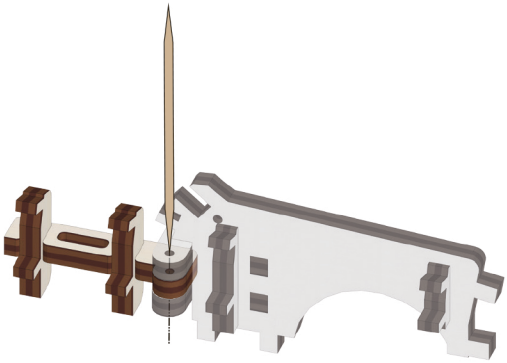

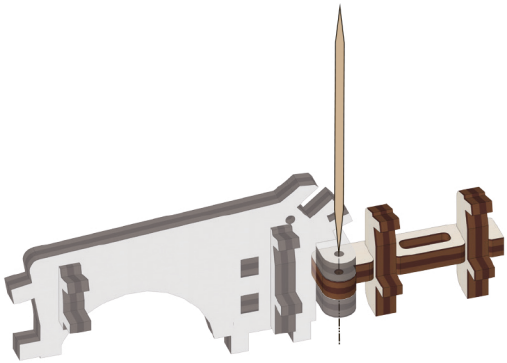

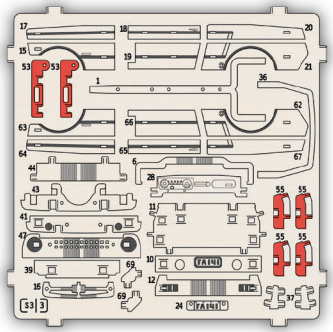

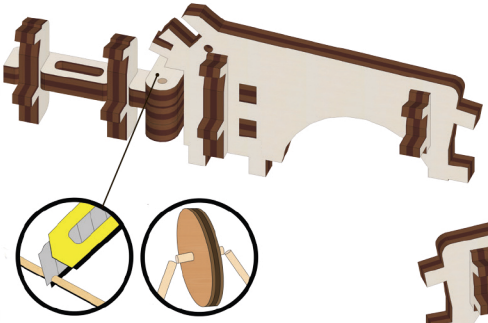

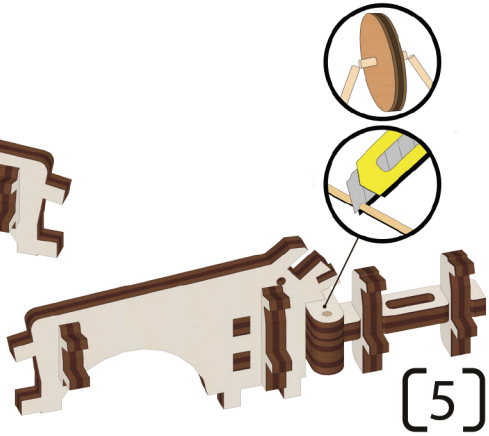

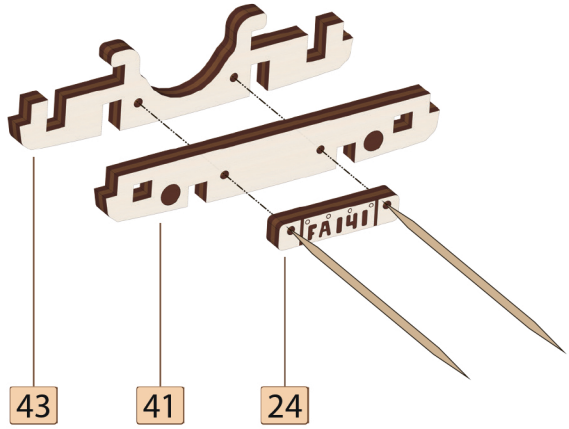
43
41
24

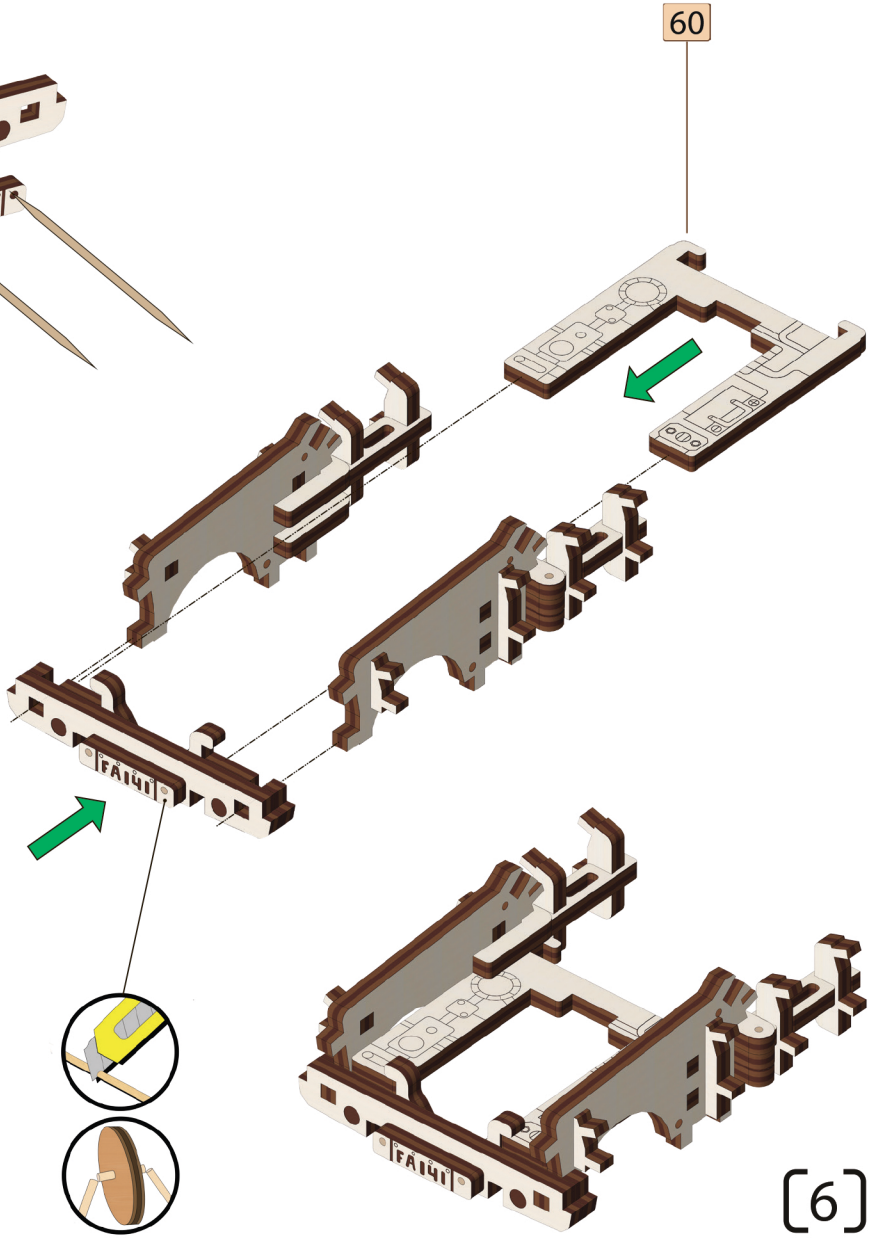
60

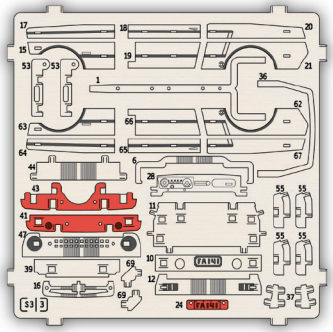
3

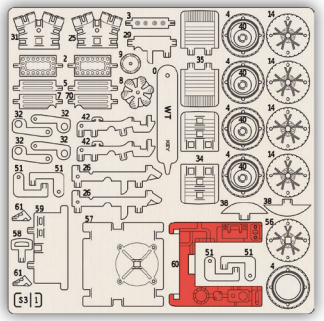
1

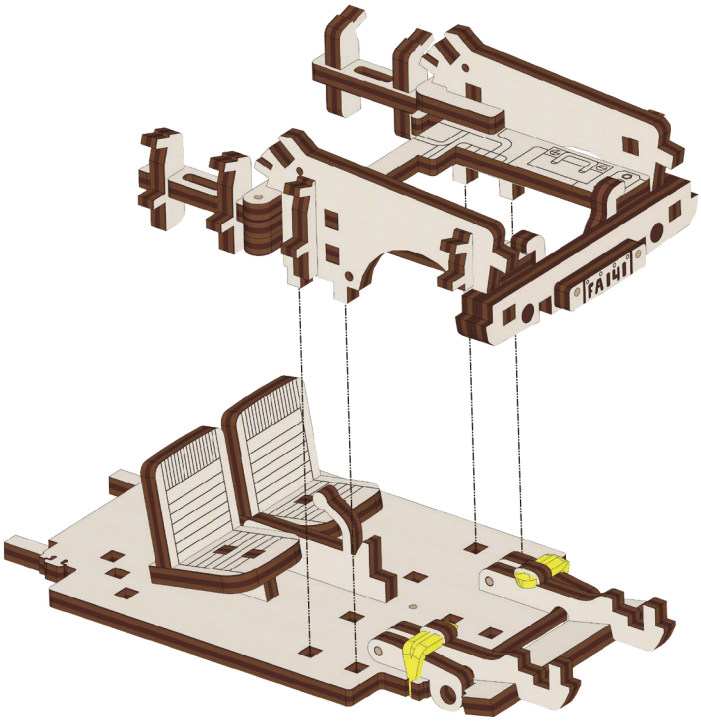
FA141

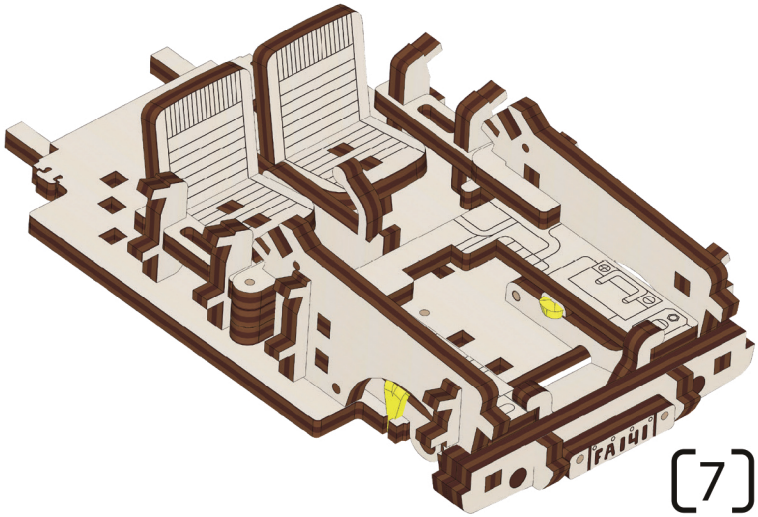
FA141

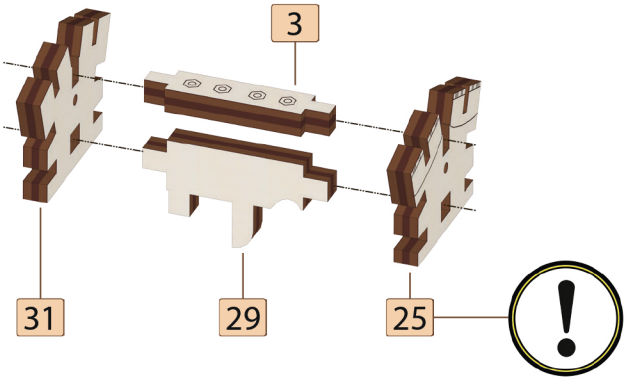
3
31
29
25

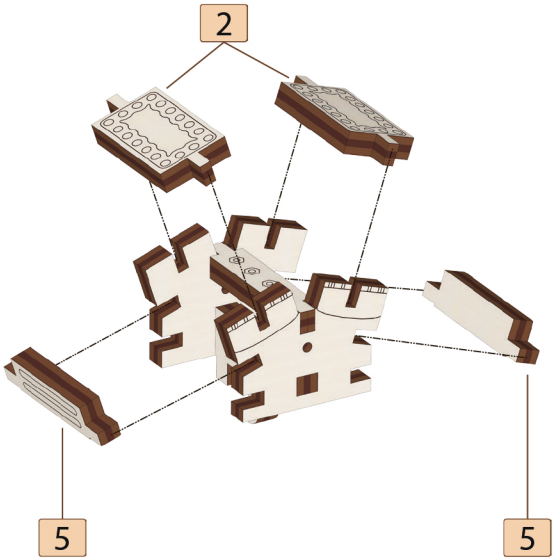
2
5
5

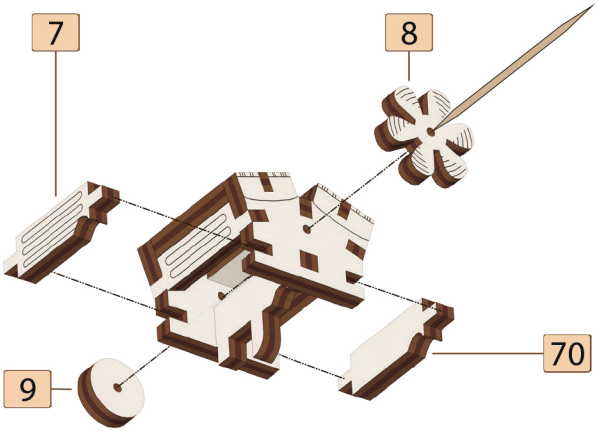
7
8
9
70

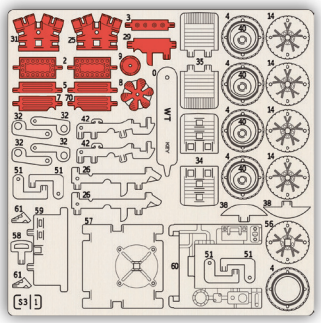

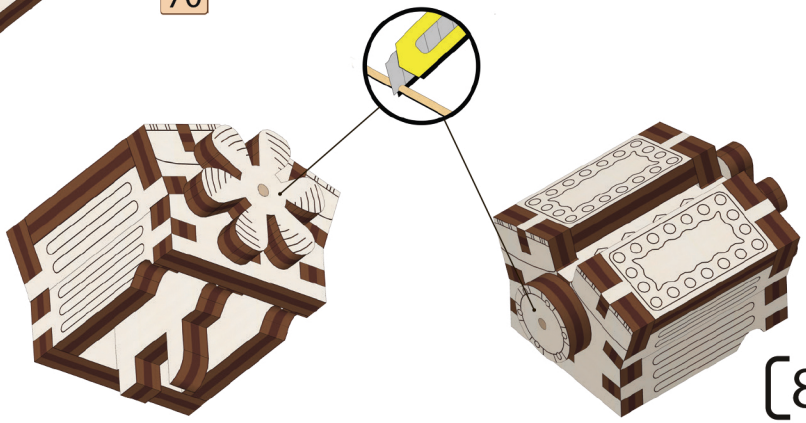

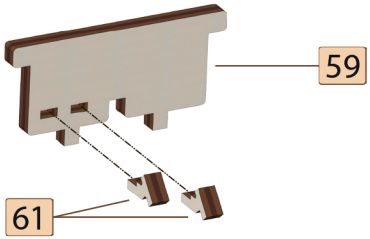

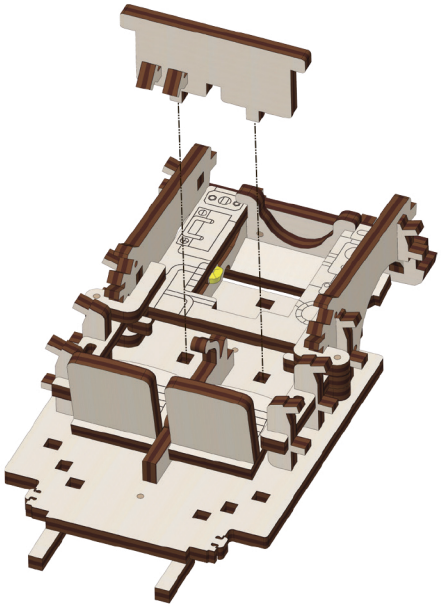

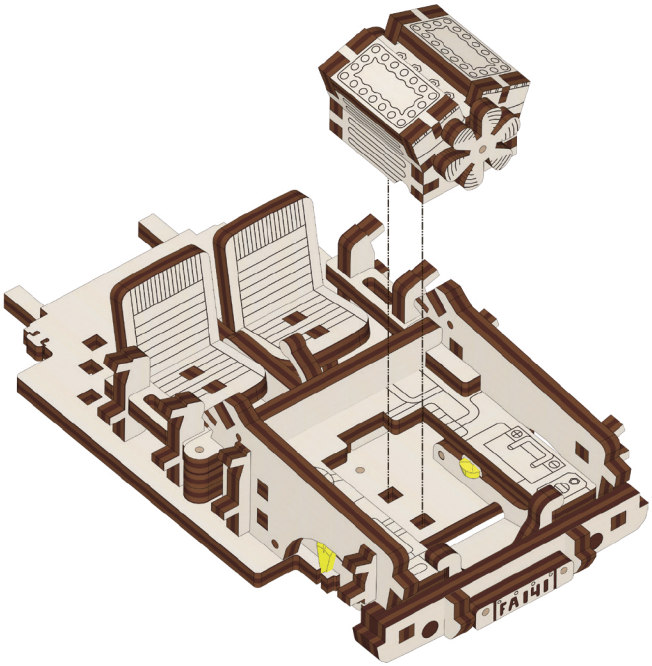

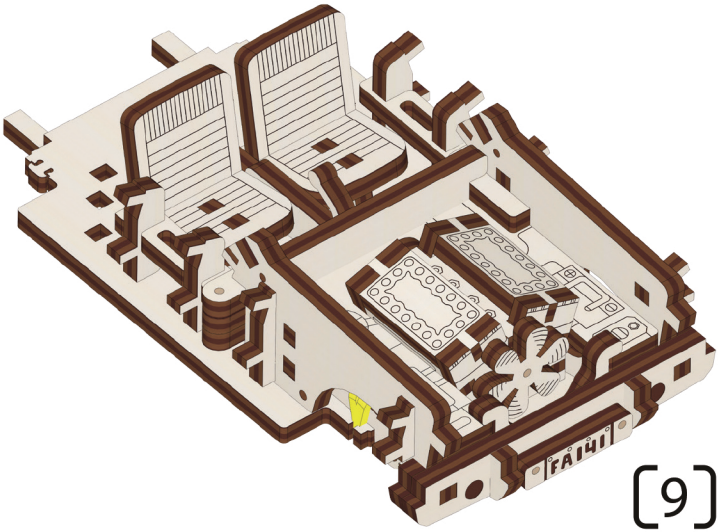

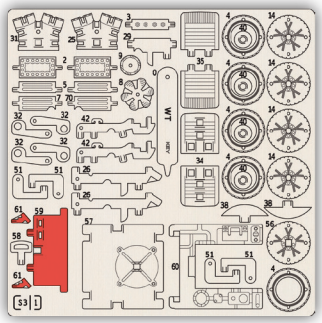

1

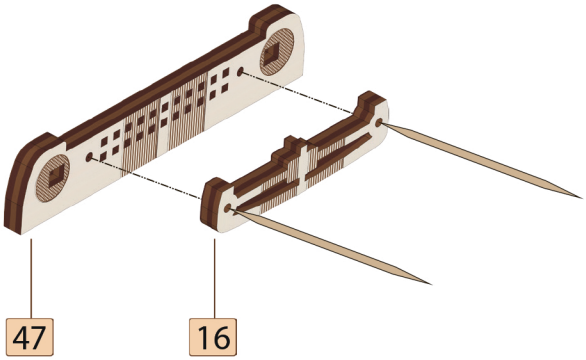
47
16

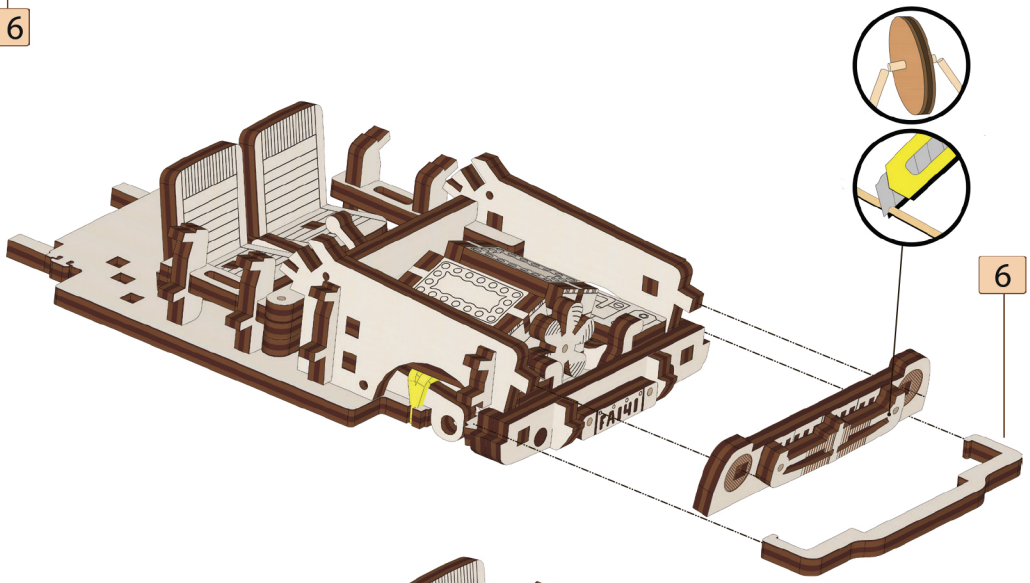
6

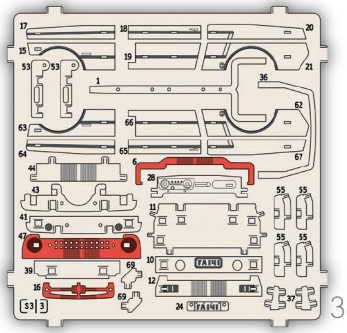

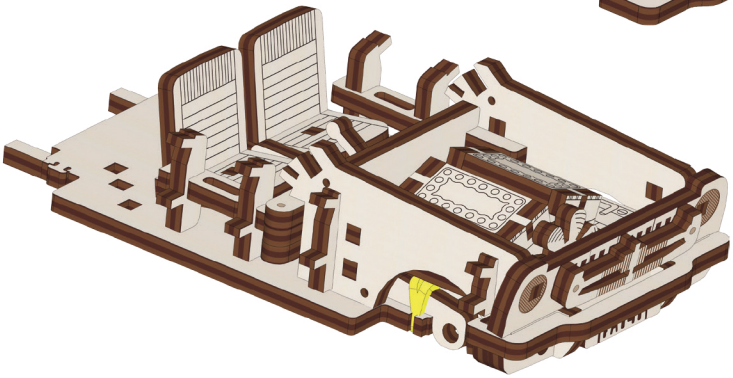

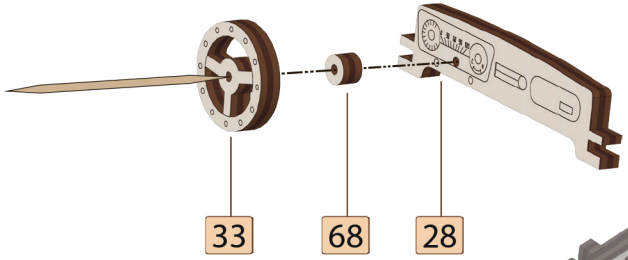
33
68
28

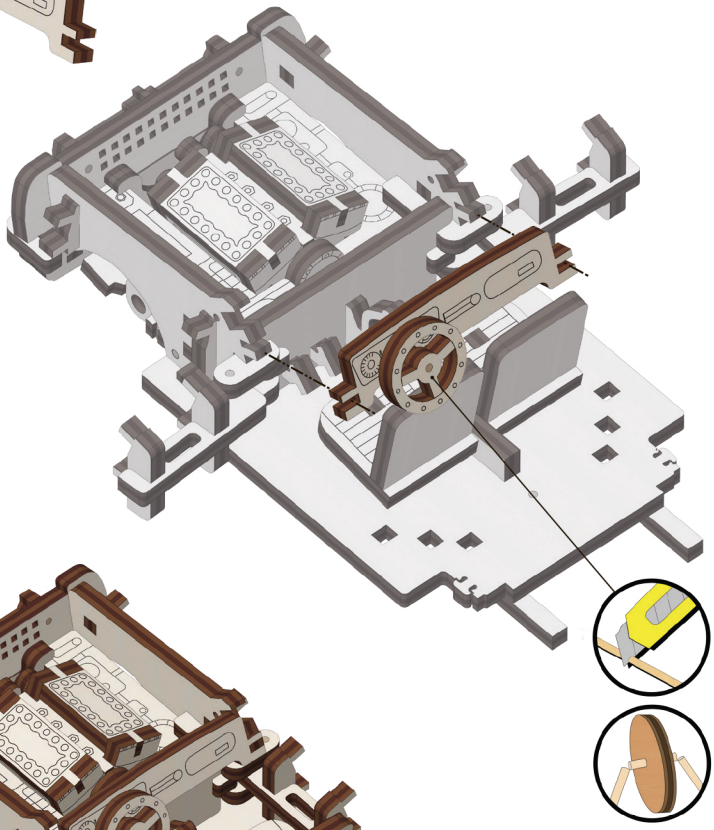

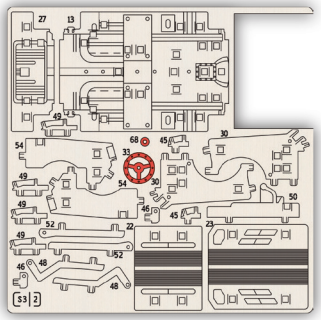
2

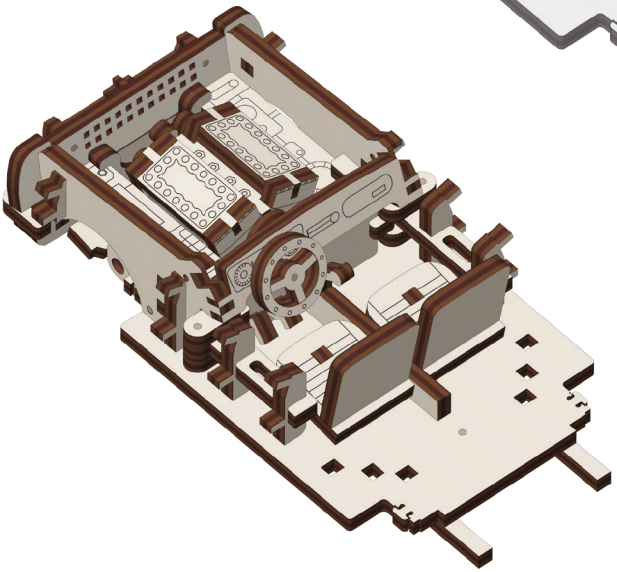

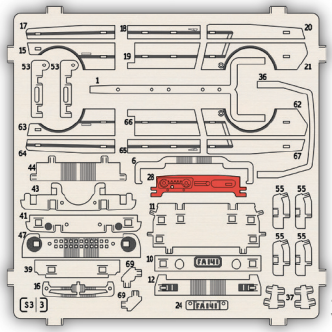
3

52
23

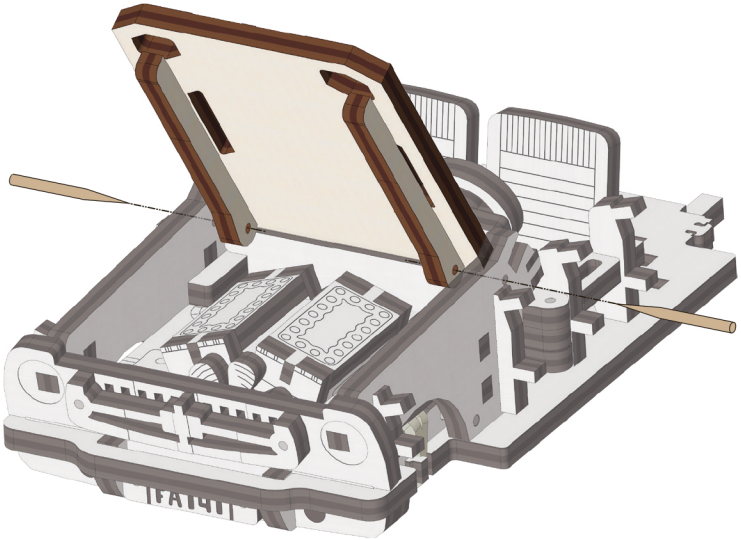

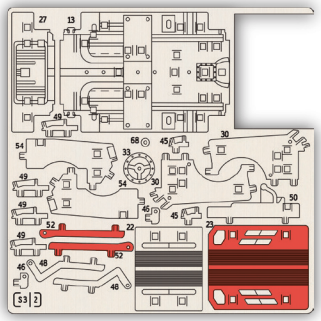

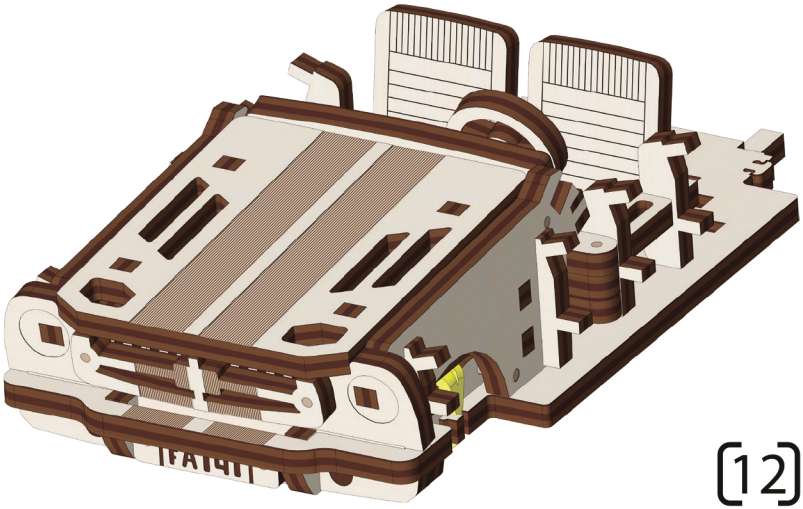

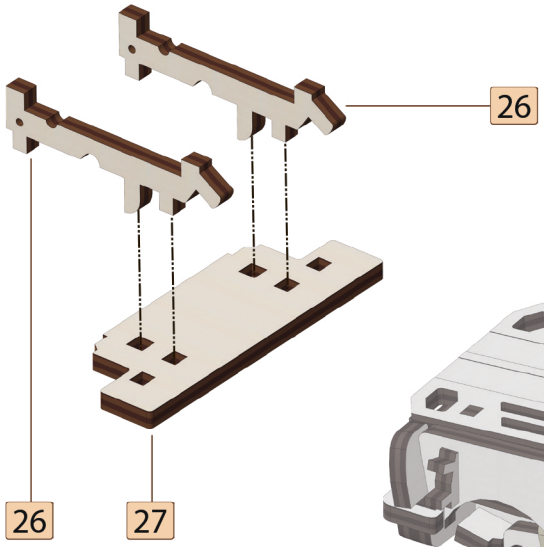

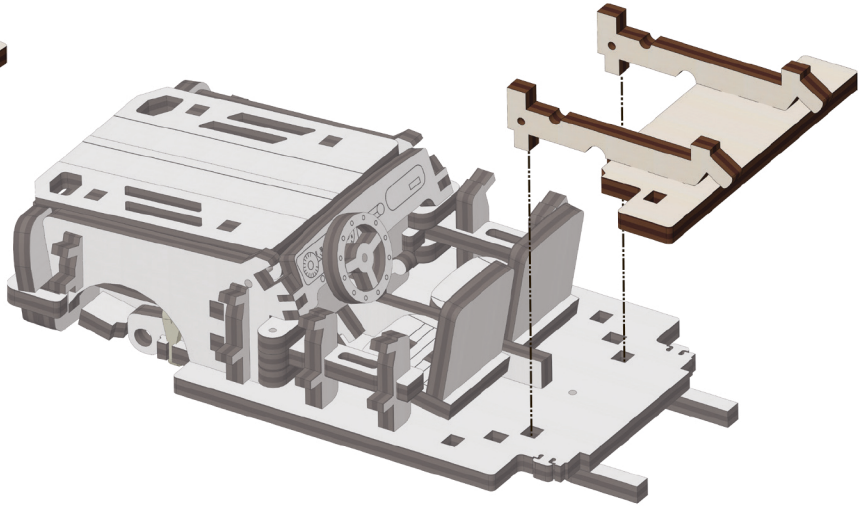

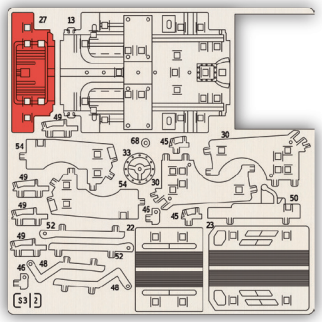

2

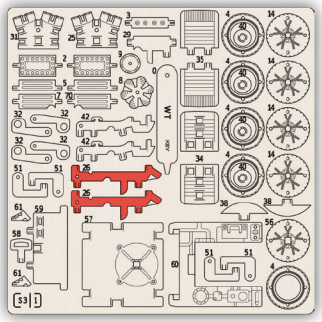

1

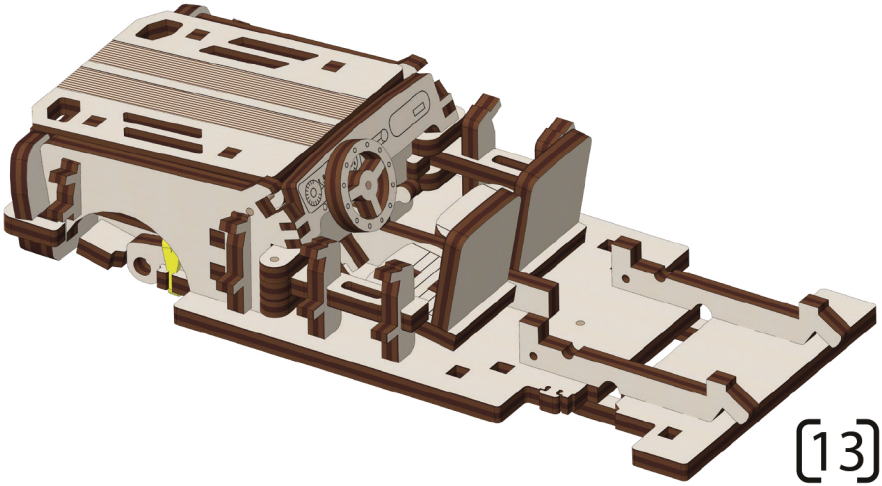

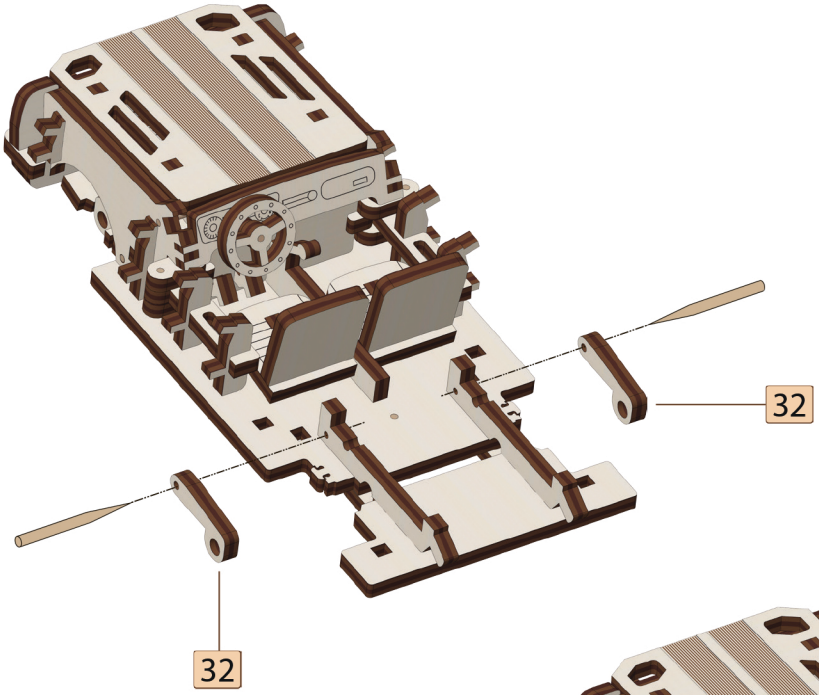

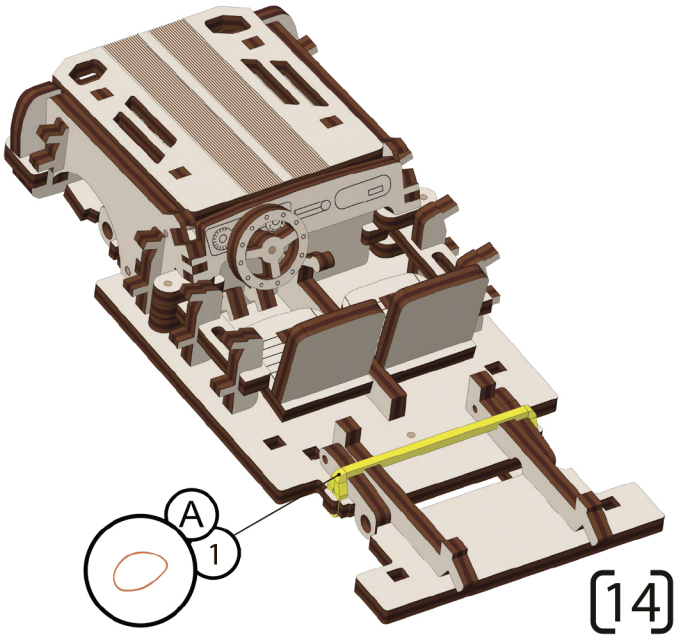

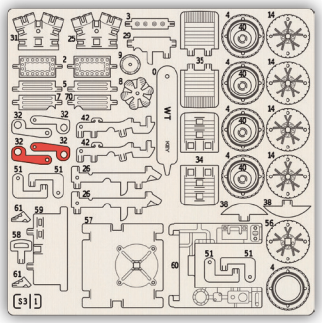

1

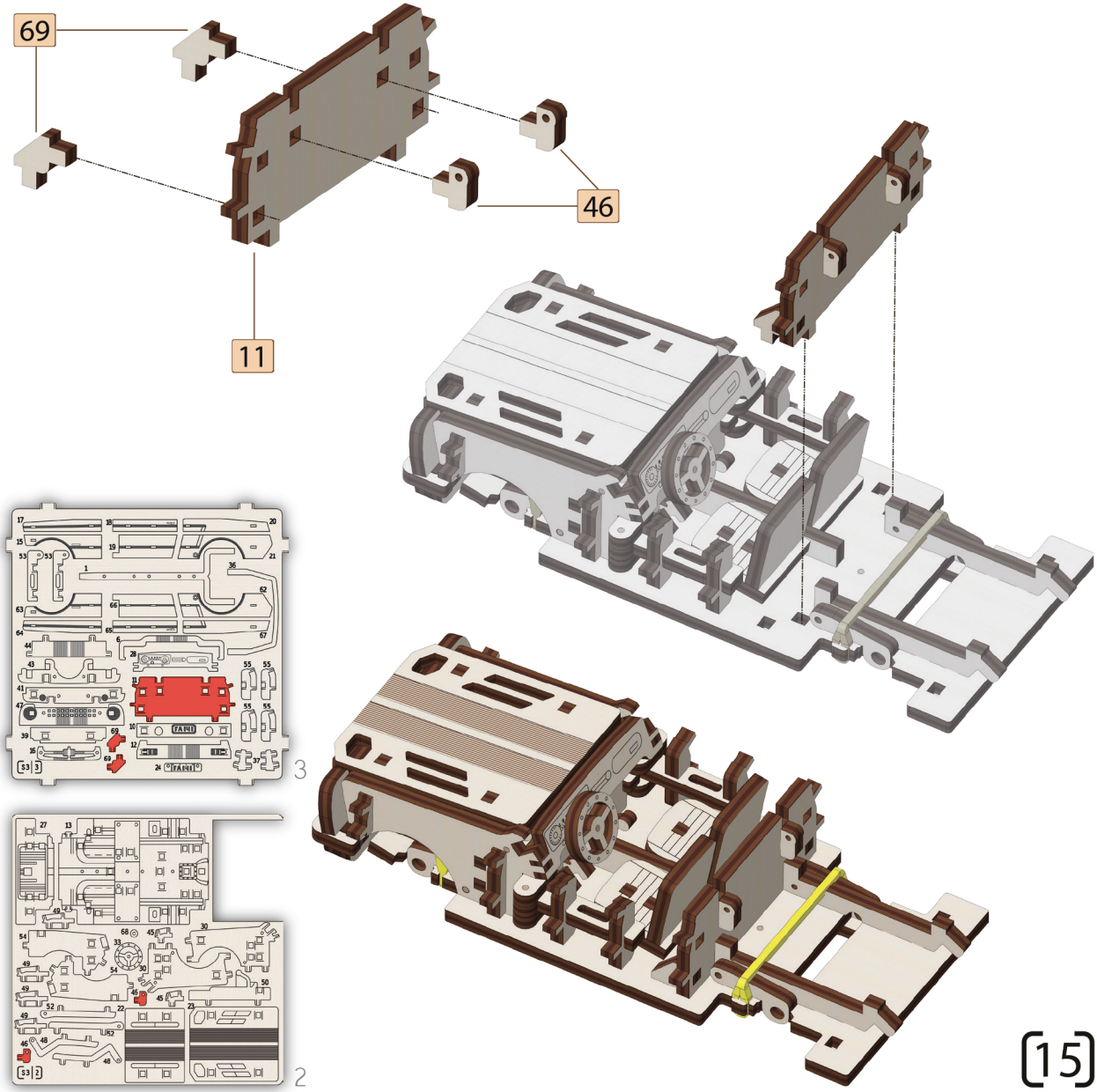
69
46
11
3
2

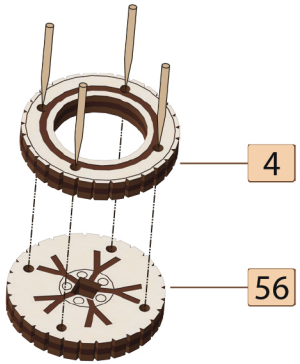
4
56

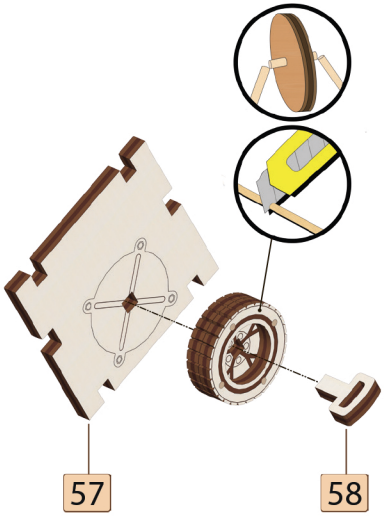
57
58

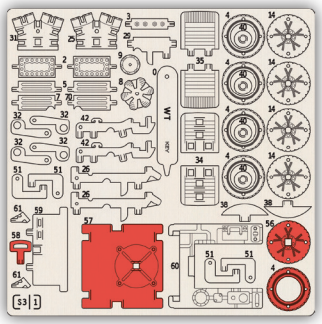

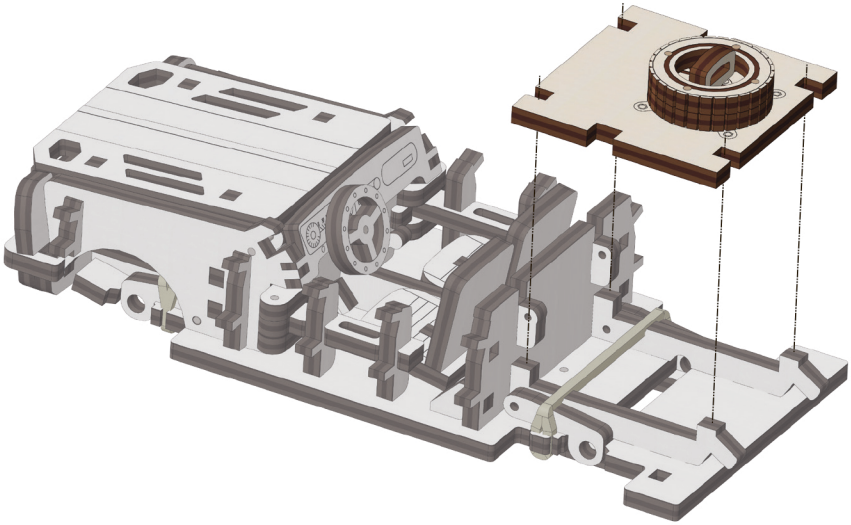

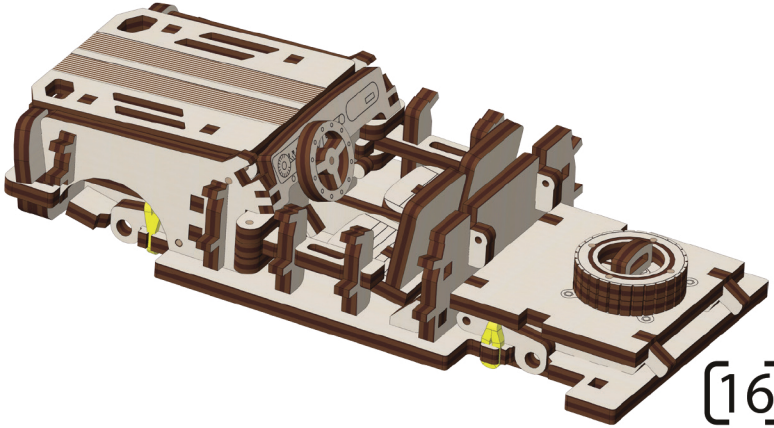

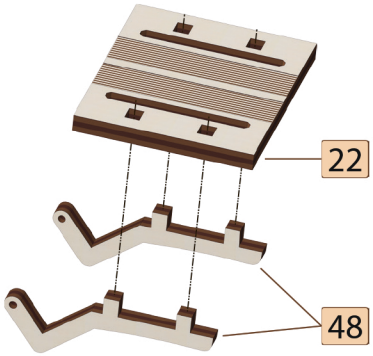

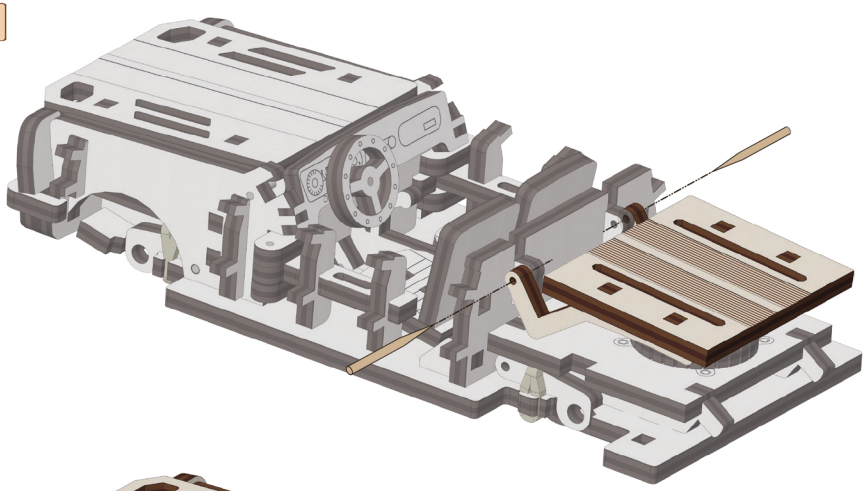

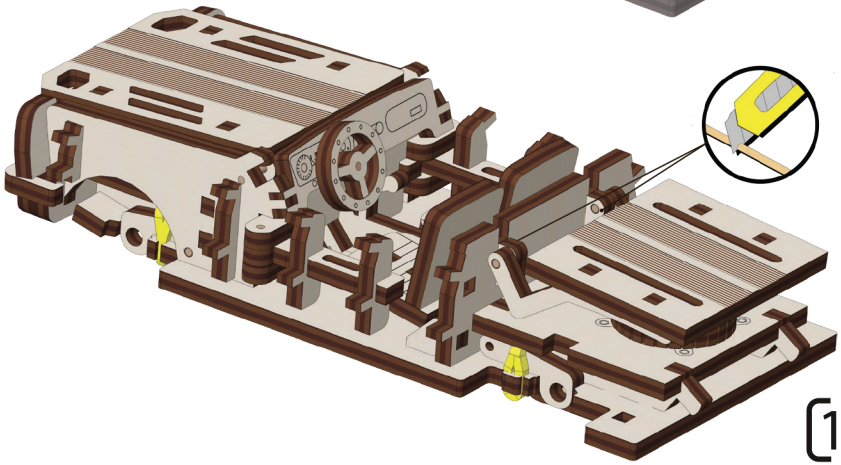

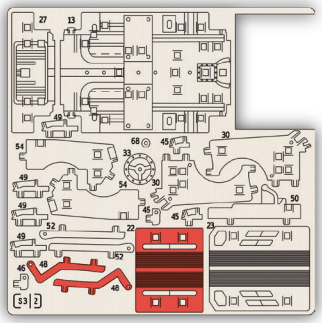

2

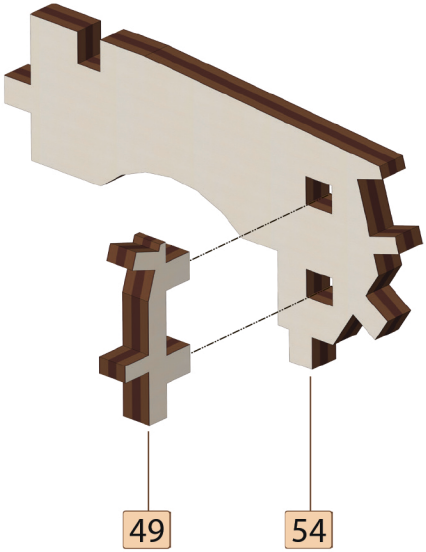

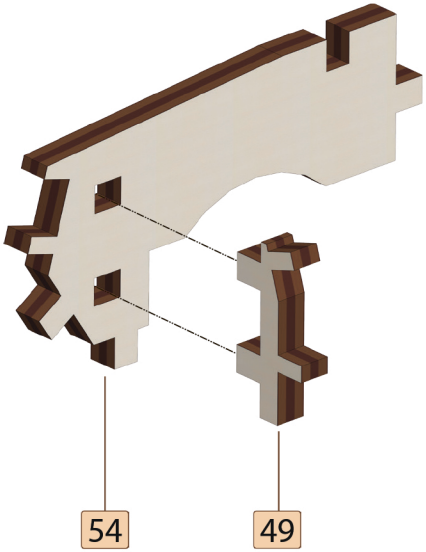

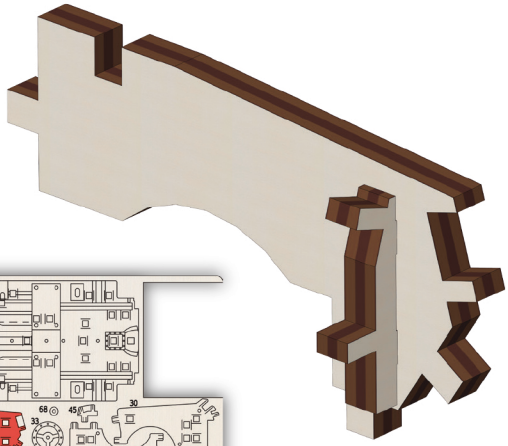

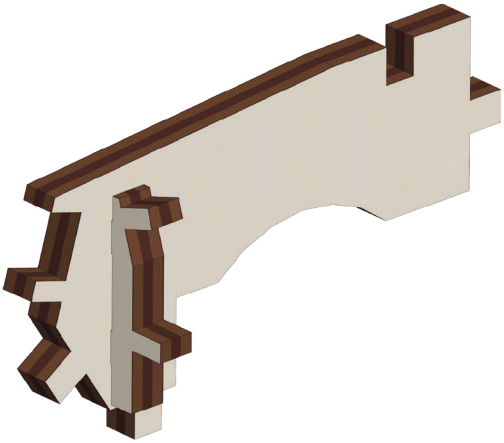

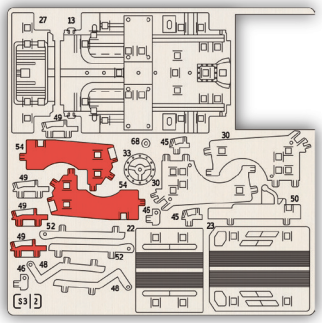

2

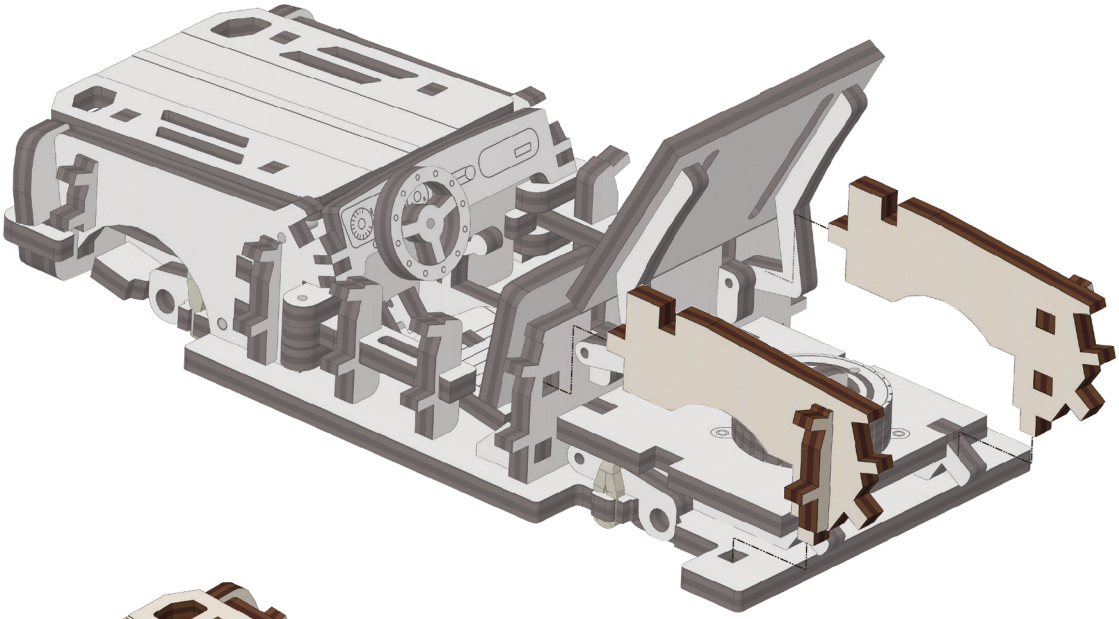

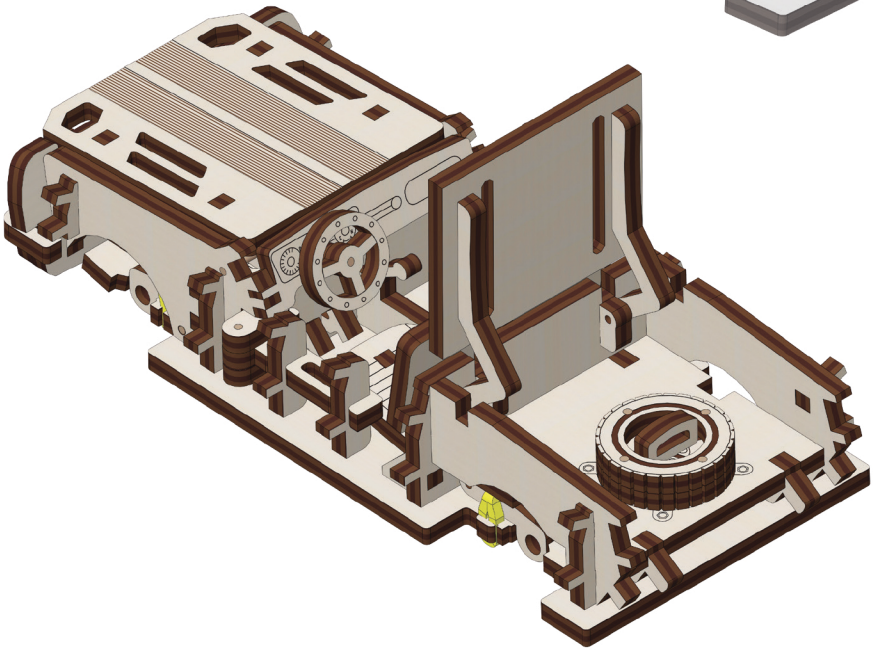

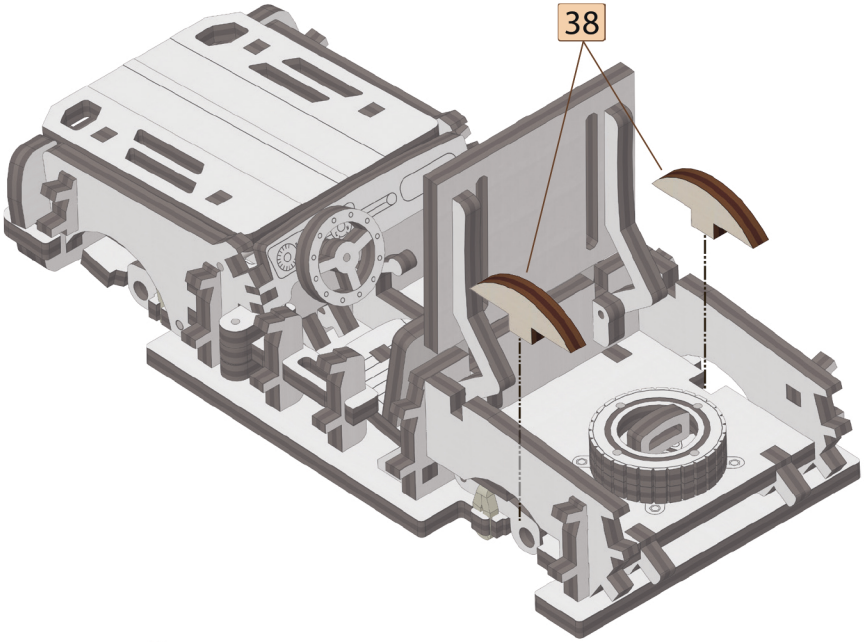

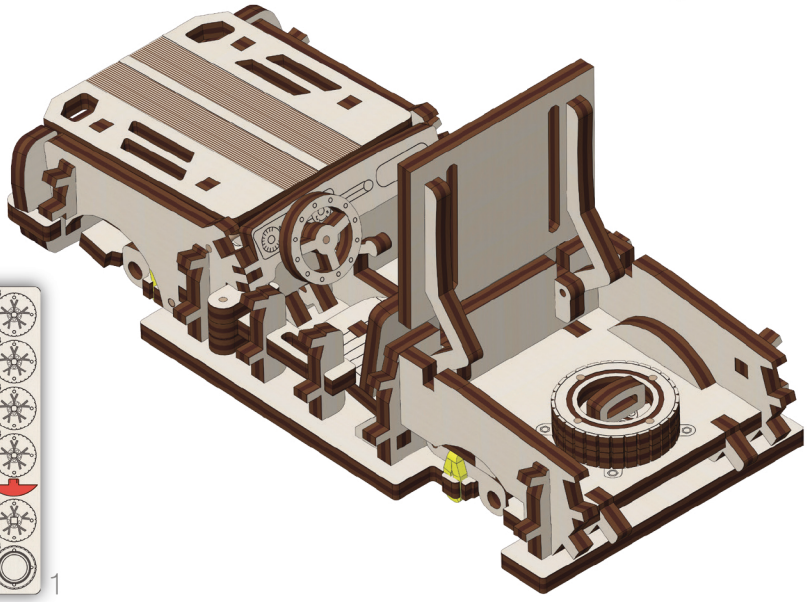

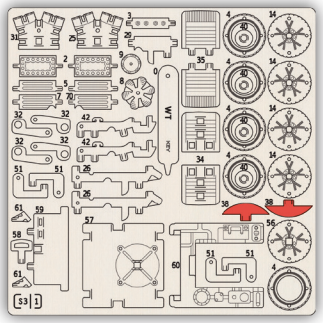

1

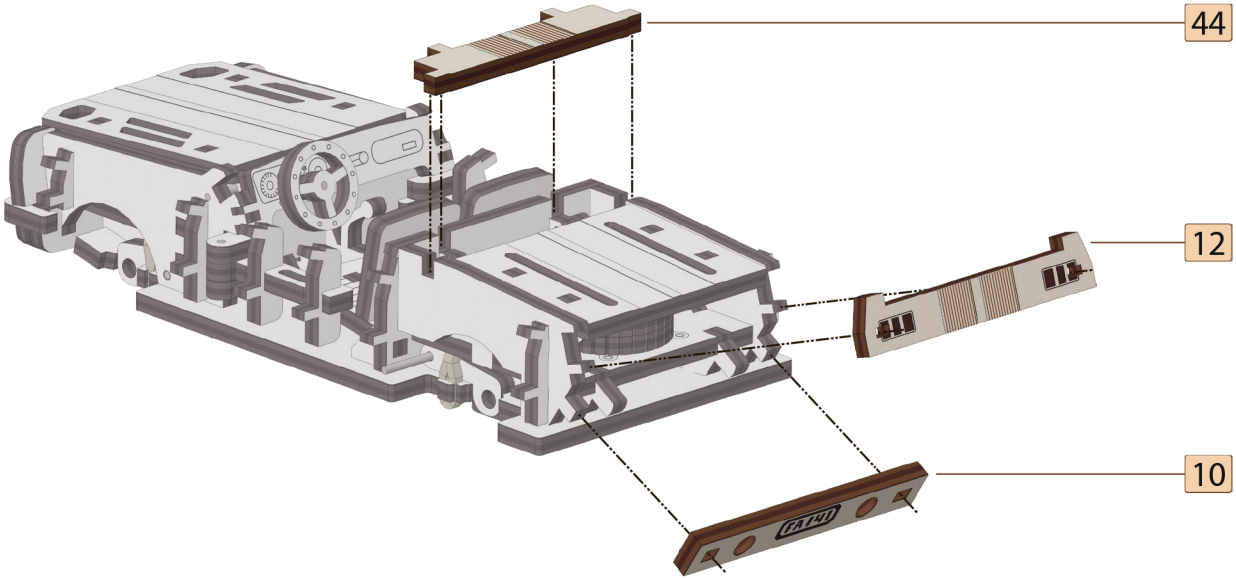
44
12
10

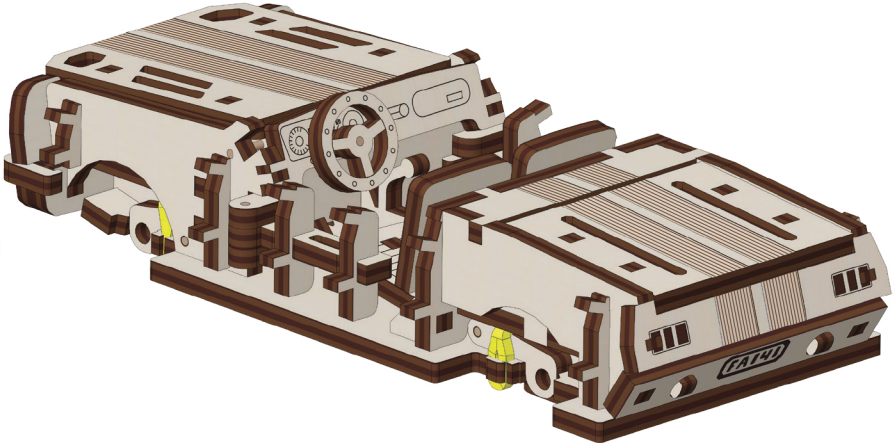

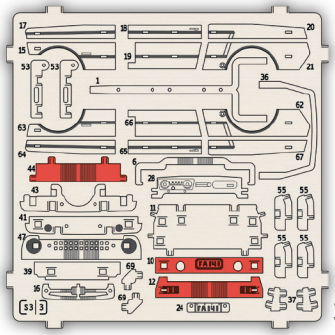

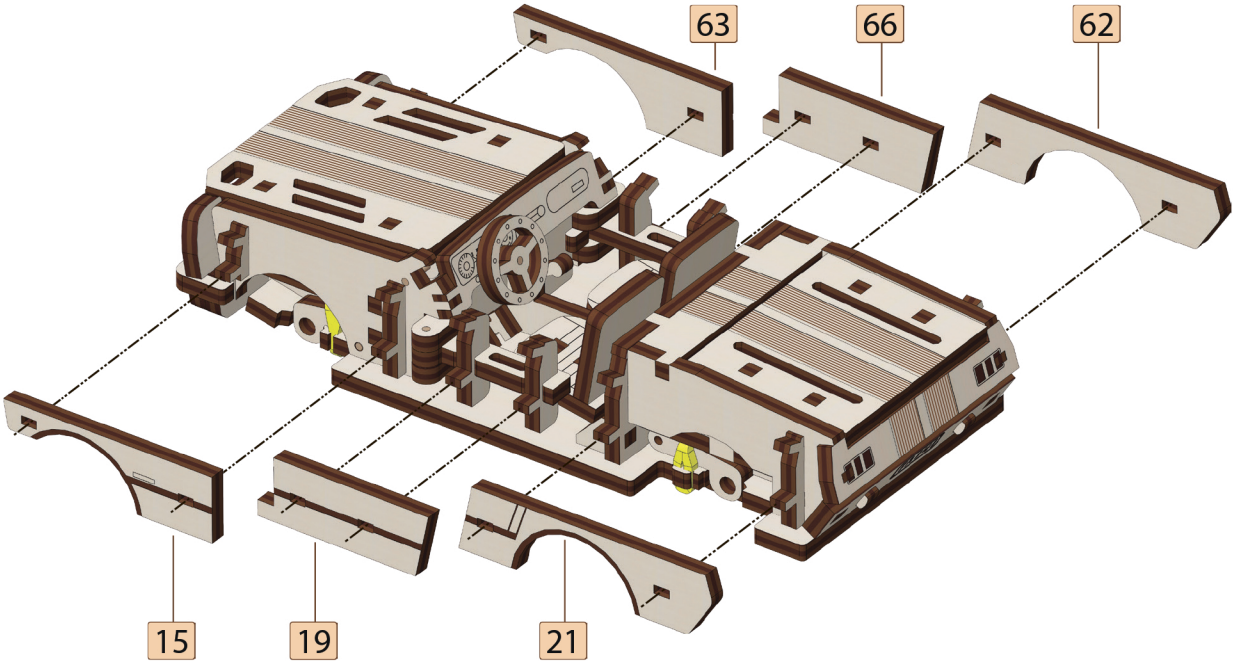
63
66
62
15
19
21

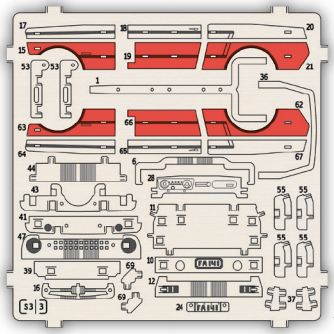

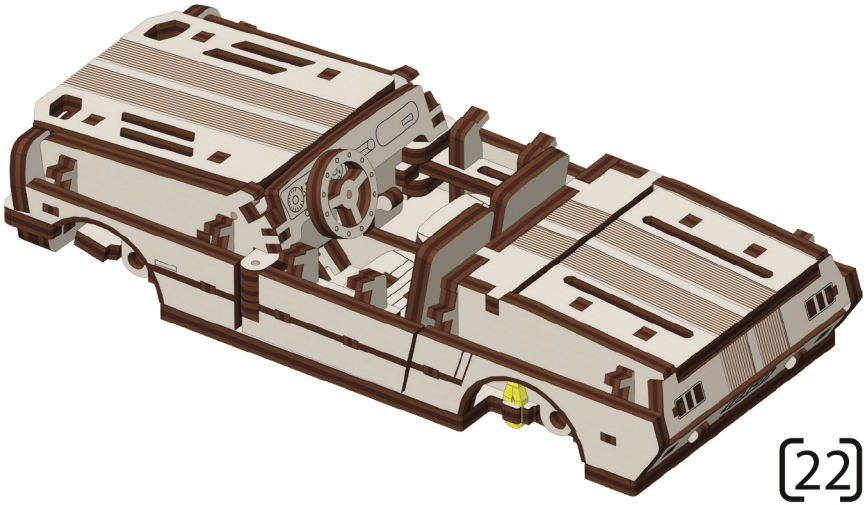

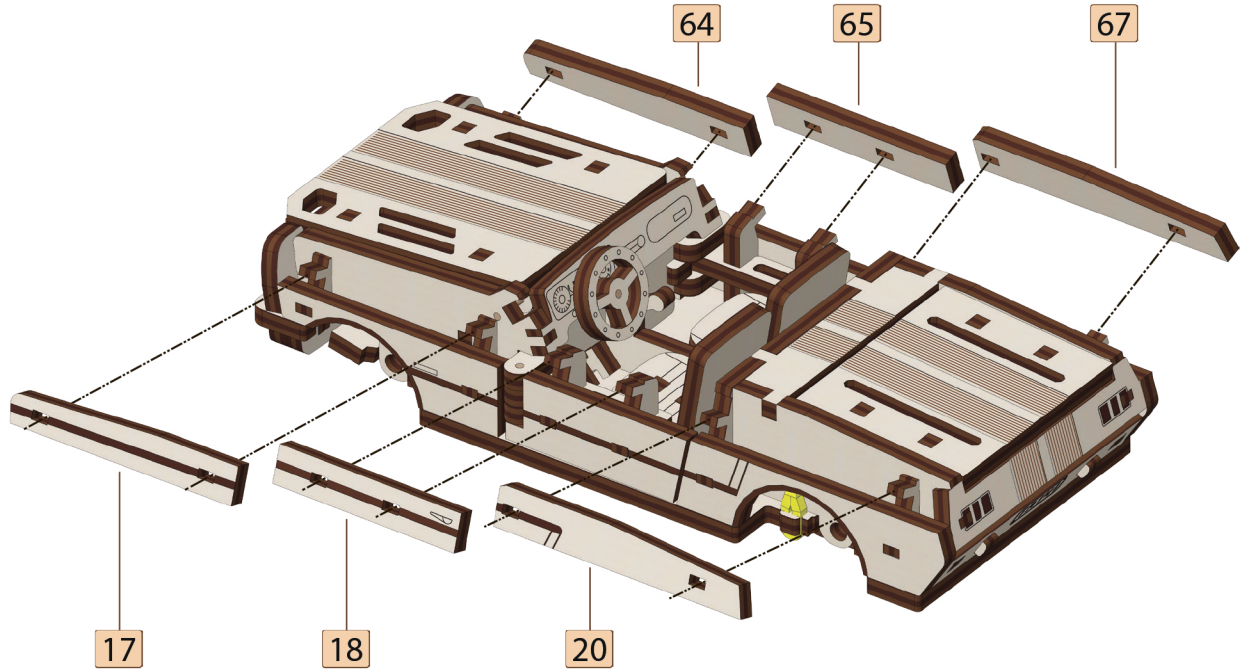
64
65
67
17
18
20

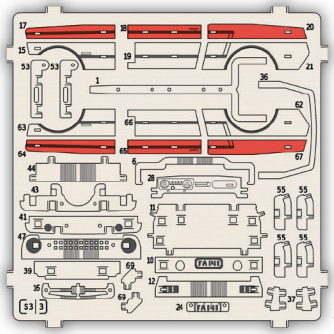

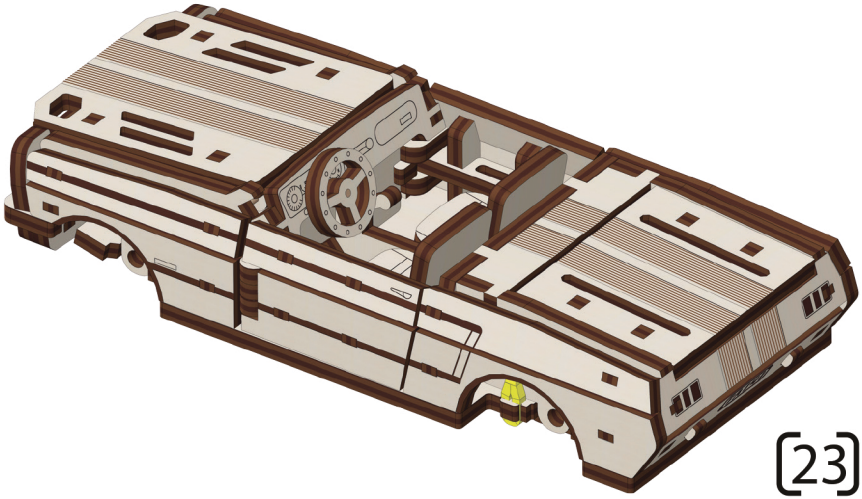

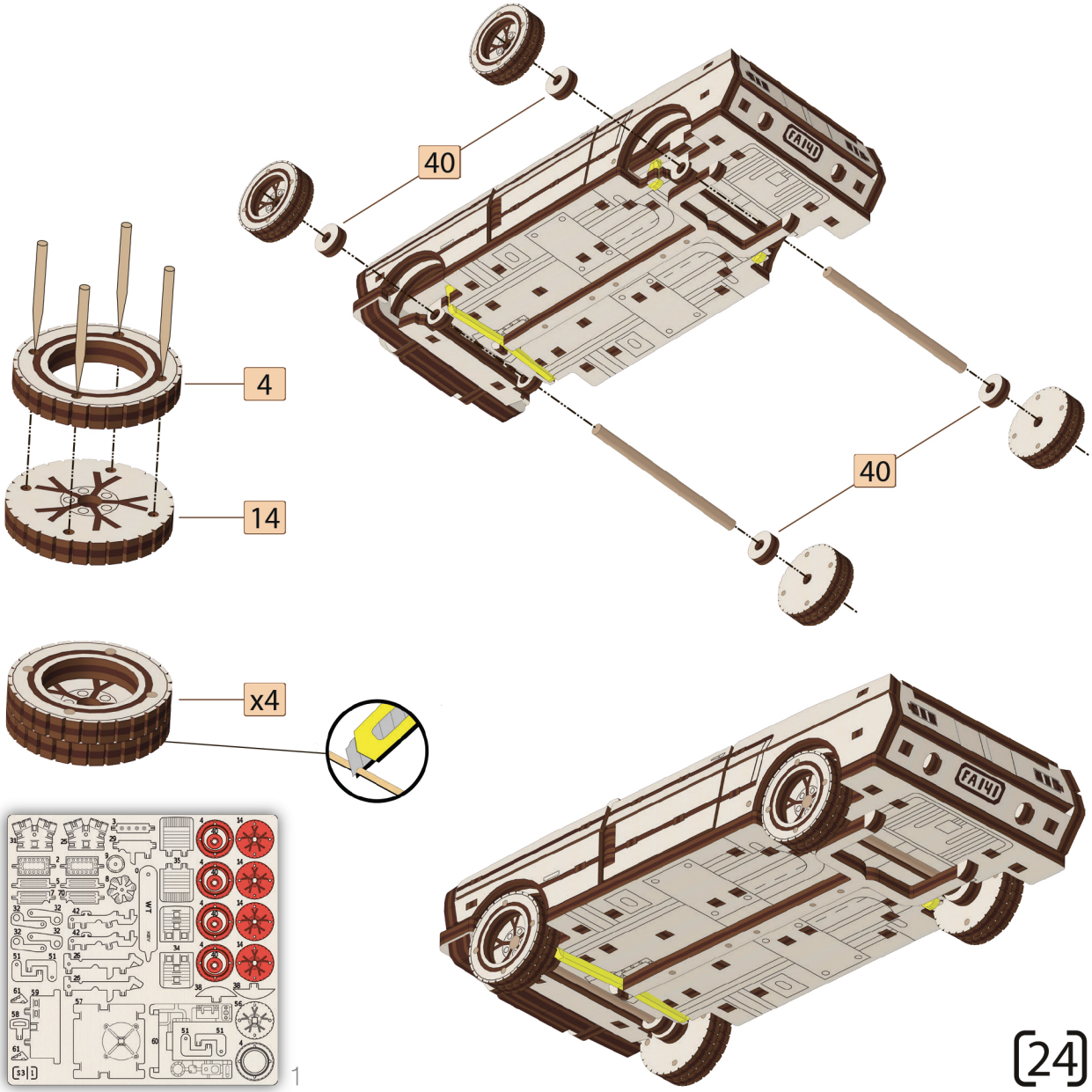
40
4
14
40
x4
FAIYD
FAIYD
1

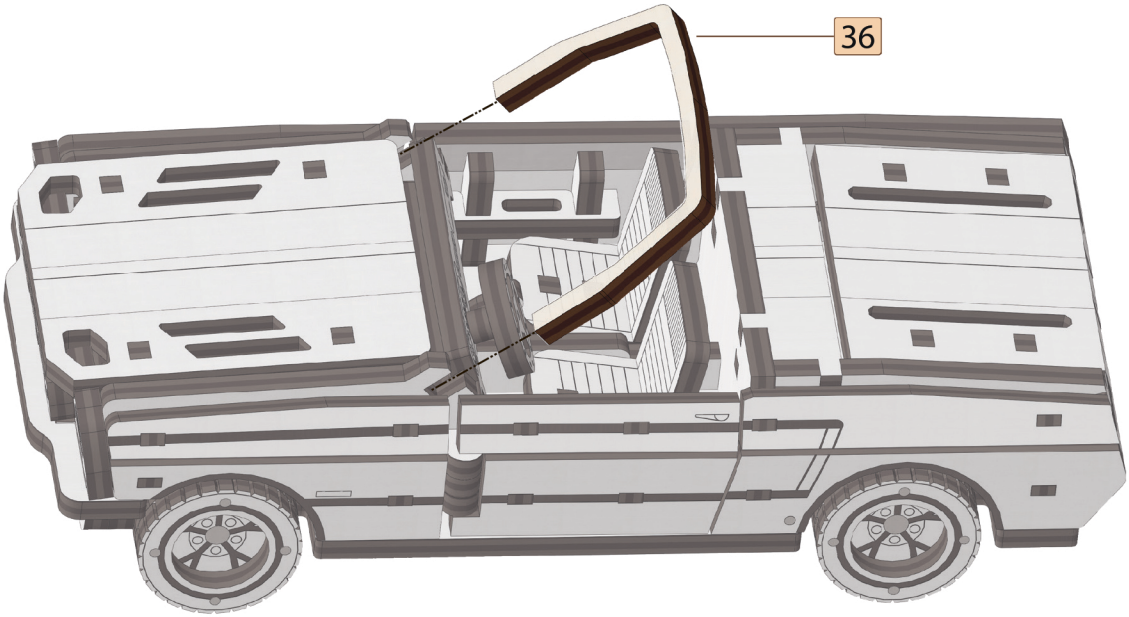
36

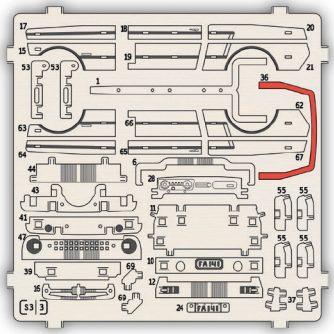
17
18
20
15
19
21
53
53
1
36
62
63
66
64
65
67
44
6
28
43
55
55
41
11
47
55
55
39
59
10
12
16
69
37
53
3
24

3

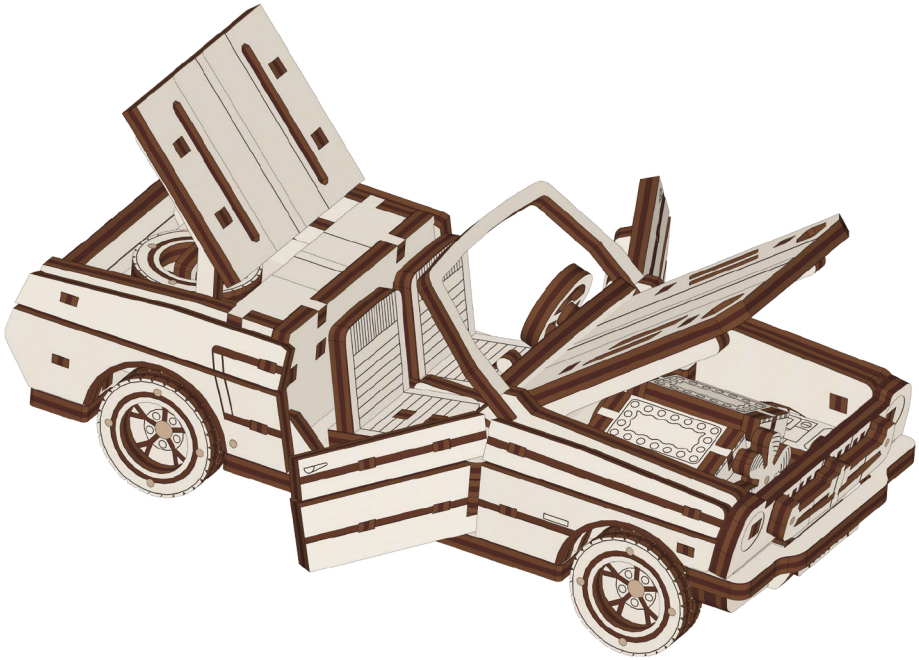

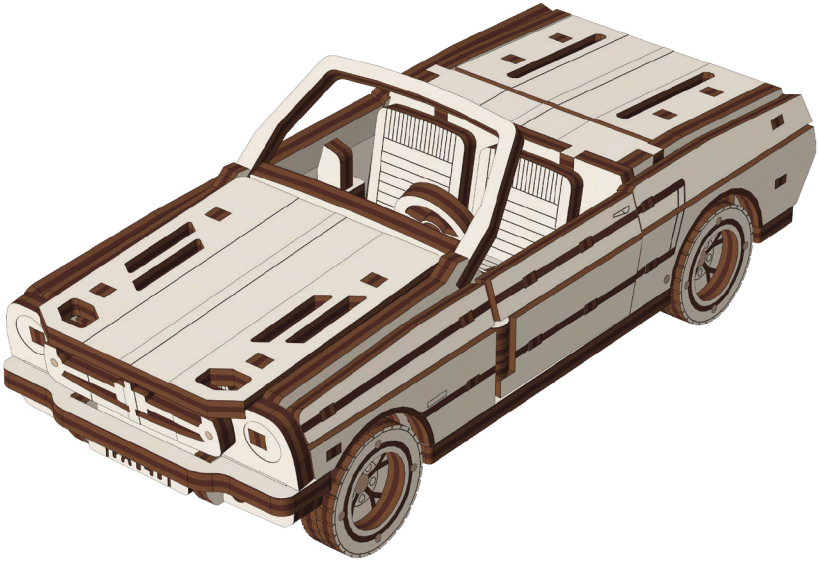

Wood Trick
NM 183
BUY TWO ADDITIONS FOR BIG RIG
Wood Trick
A NEW WORLD OF ART
INTERIOR COLLECTION
CAR TRAILER & JEEP
TANK TRAILER
MECHANICAL 3D PUZZLE BIG RIG
FROM AMUSEMENT TO MECHANICS