Wood Trick®
A NEW WORLD OF ART
MECHANICAL
3D PUZZLE
SAFARI CAR 4X4

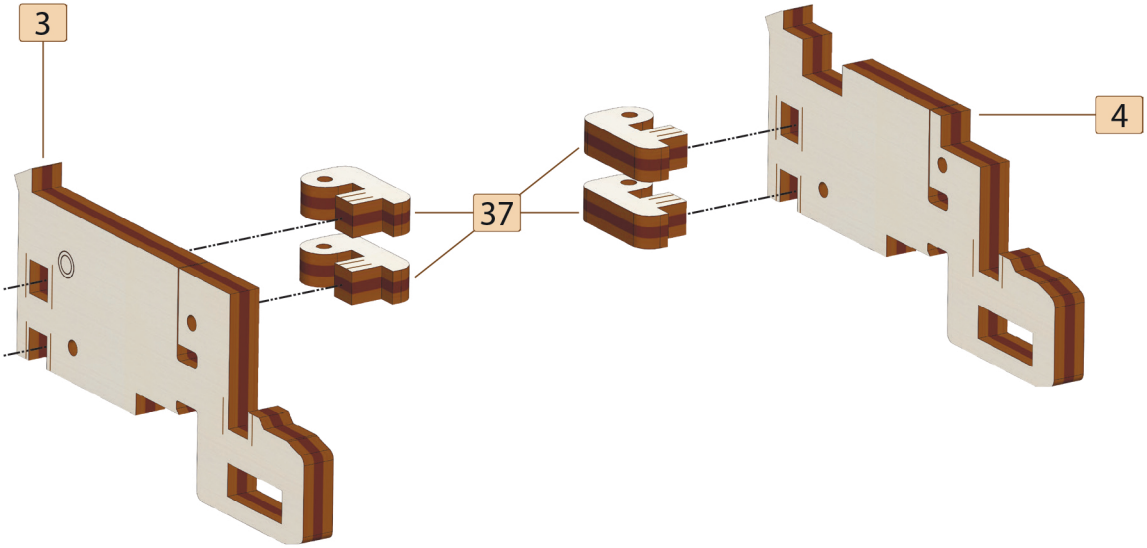

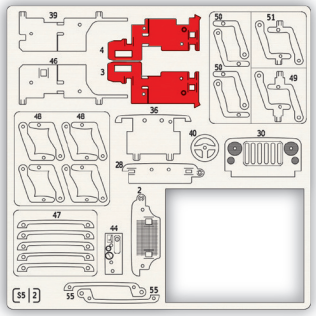

2

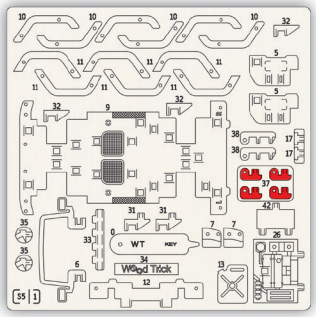

1

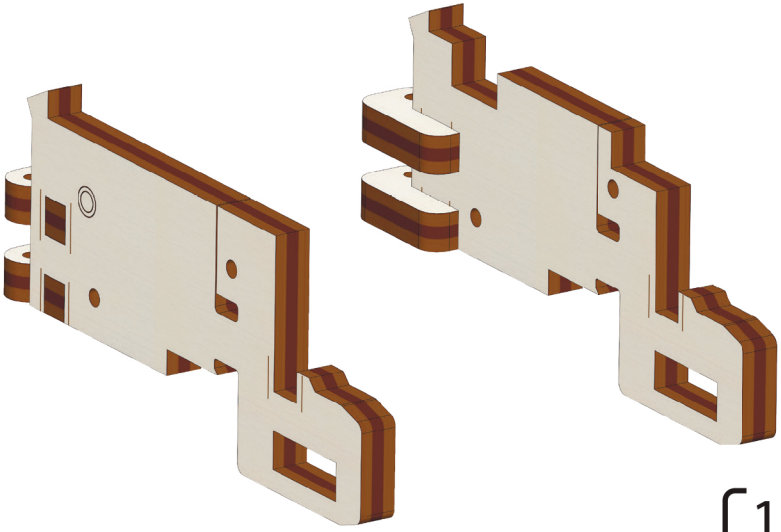

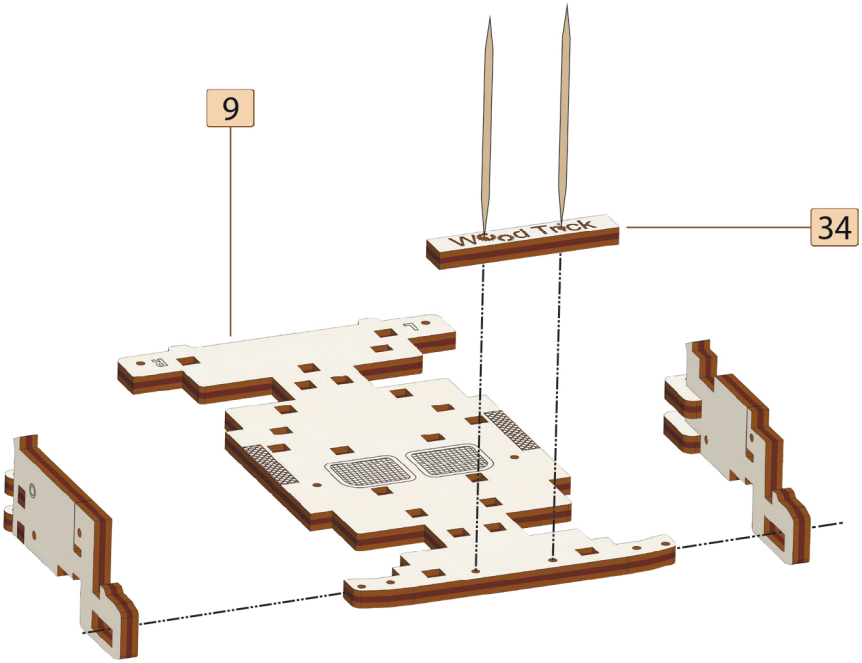

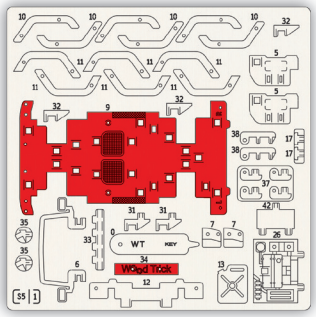

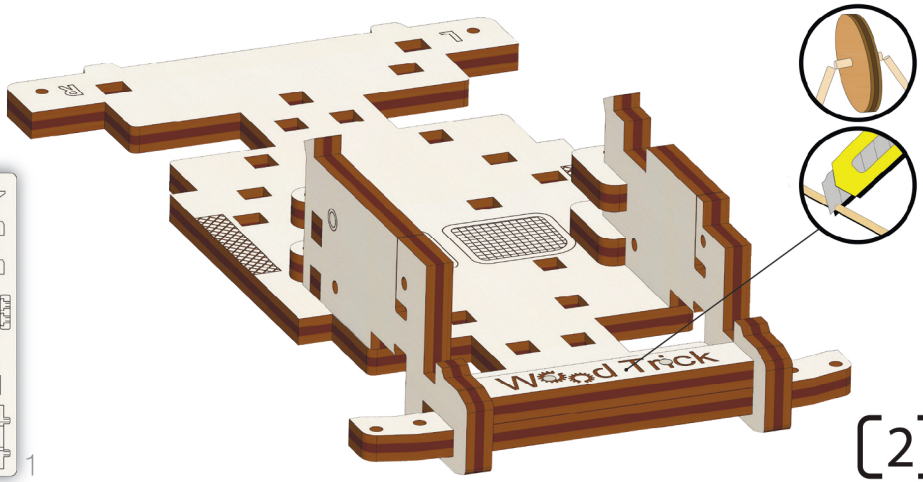

[2]

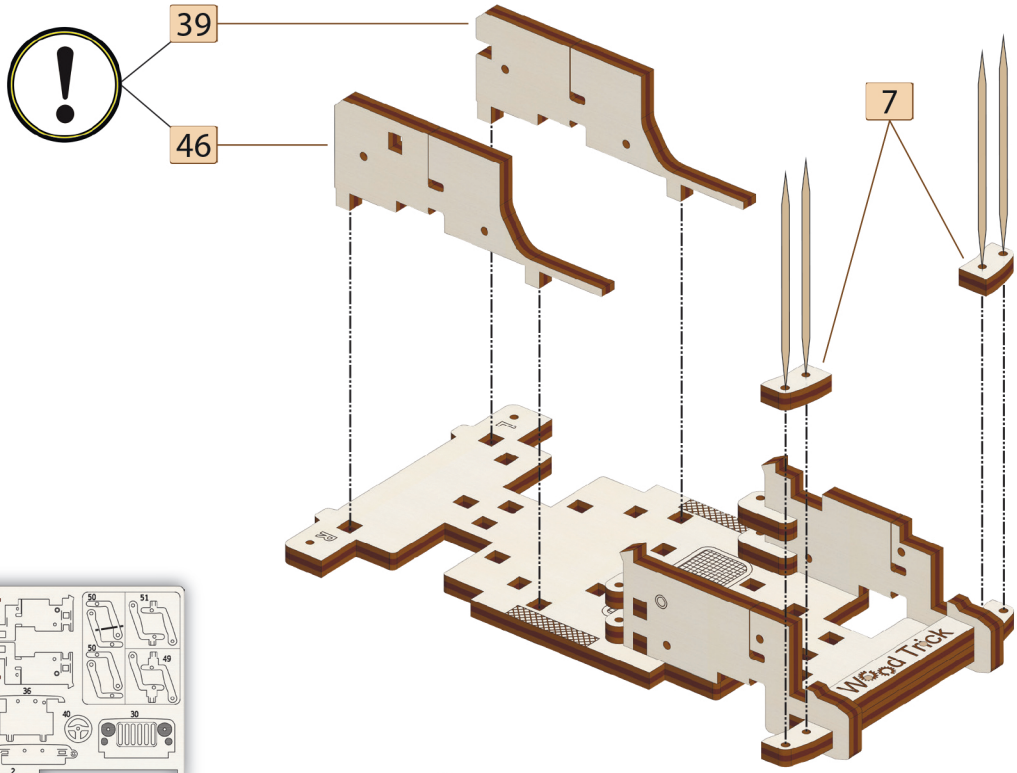

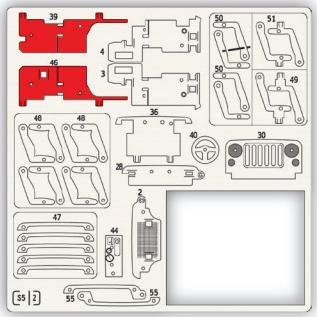

2

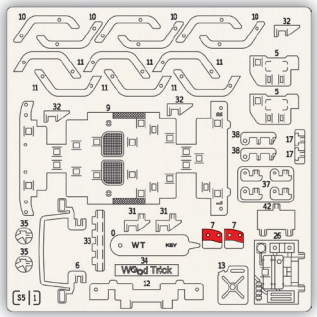

1

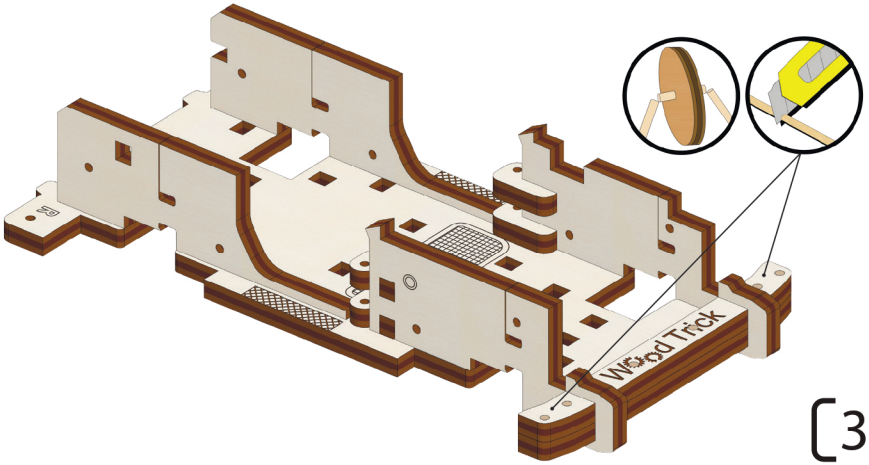

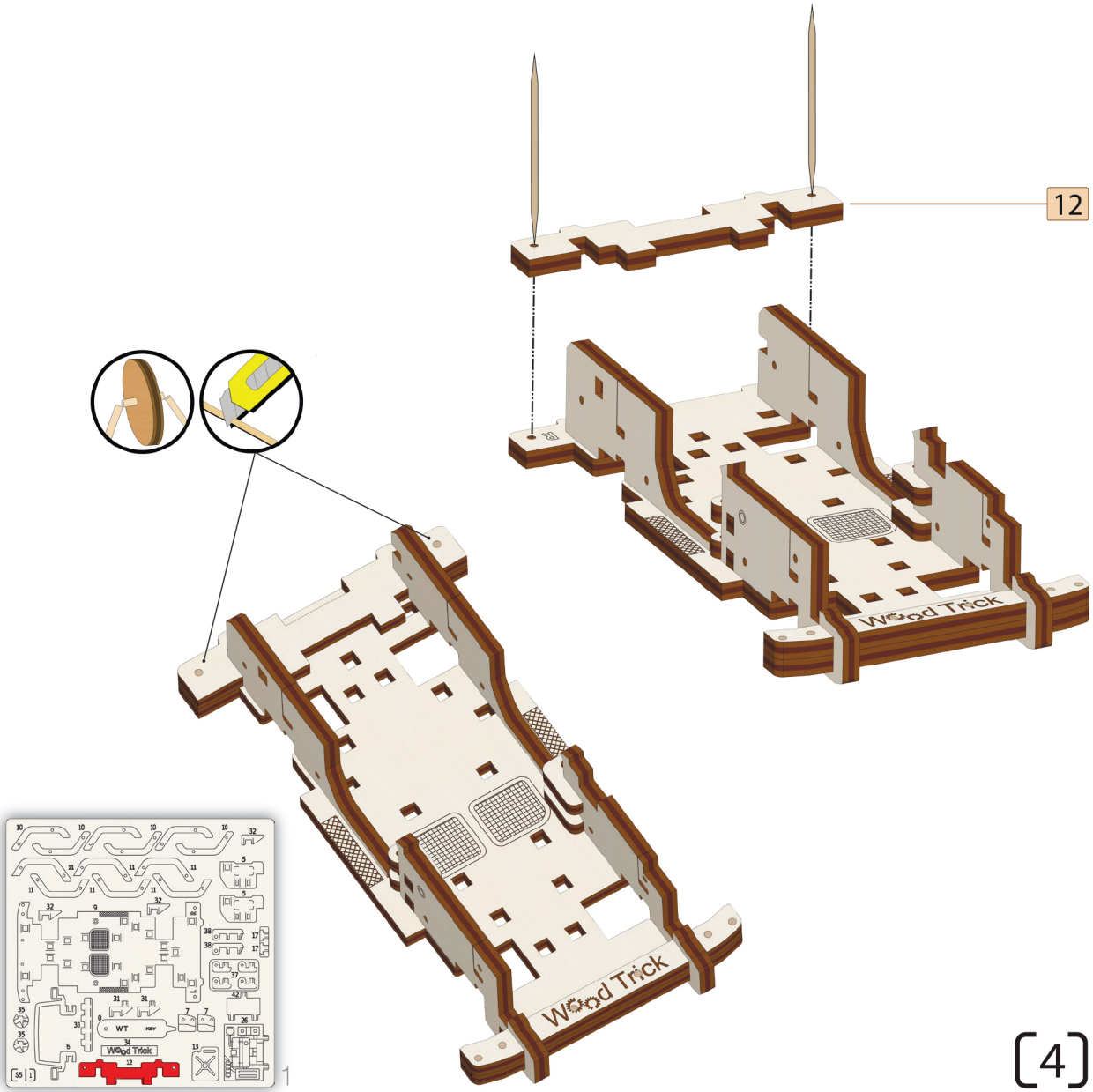
12
Wood Trick
Wood Trick
Wood Trick
WT
MAV
S5
1

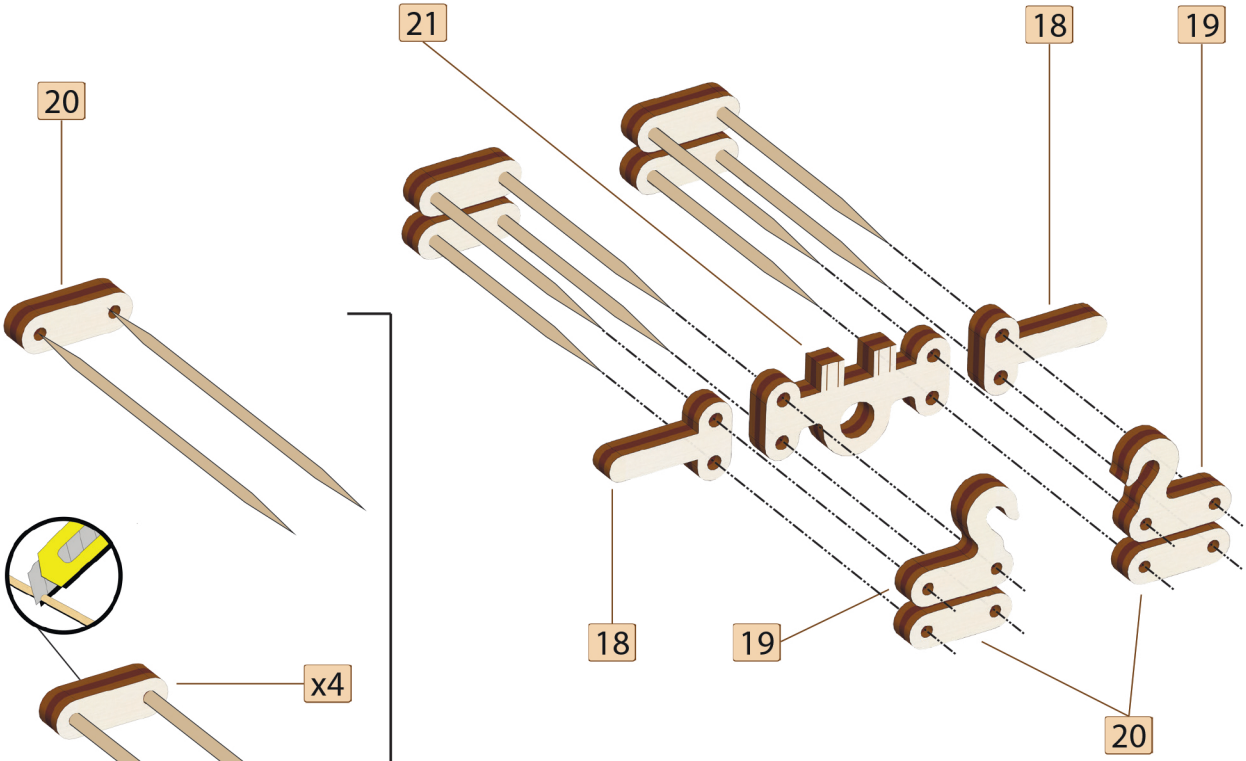
20
21
18
19
x4
18
19
20

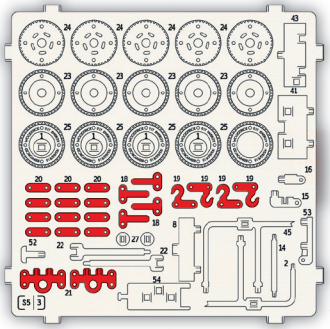

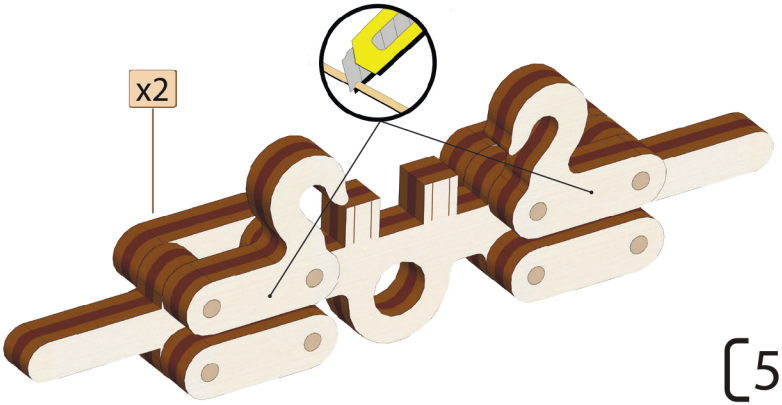
x2

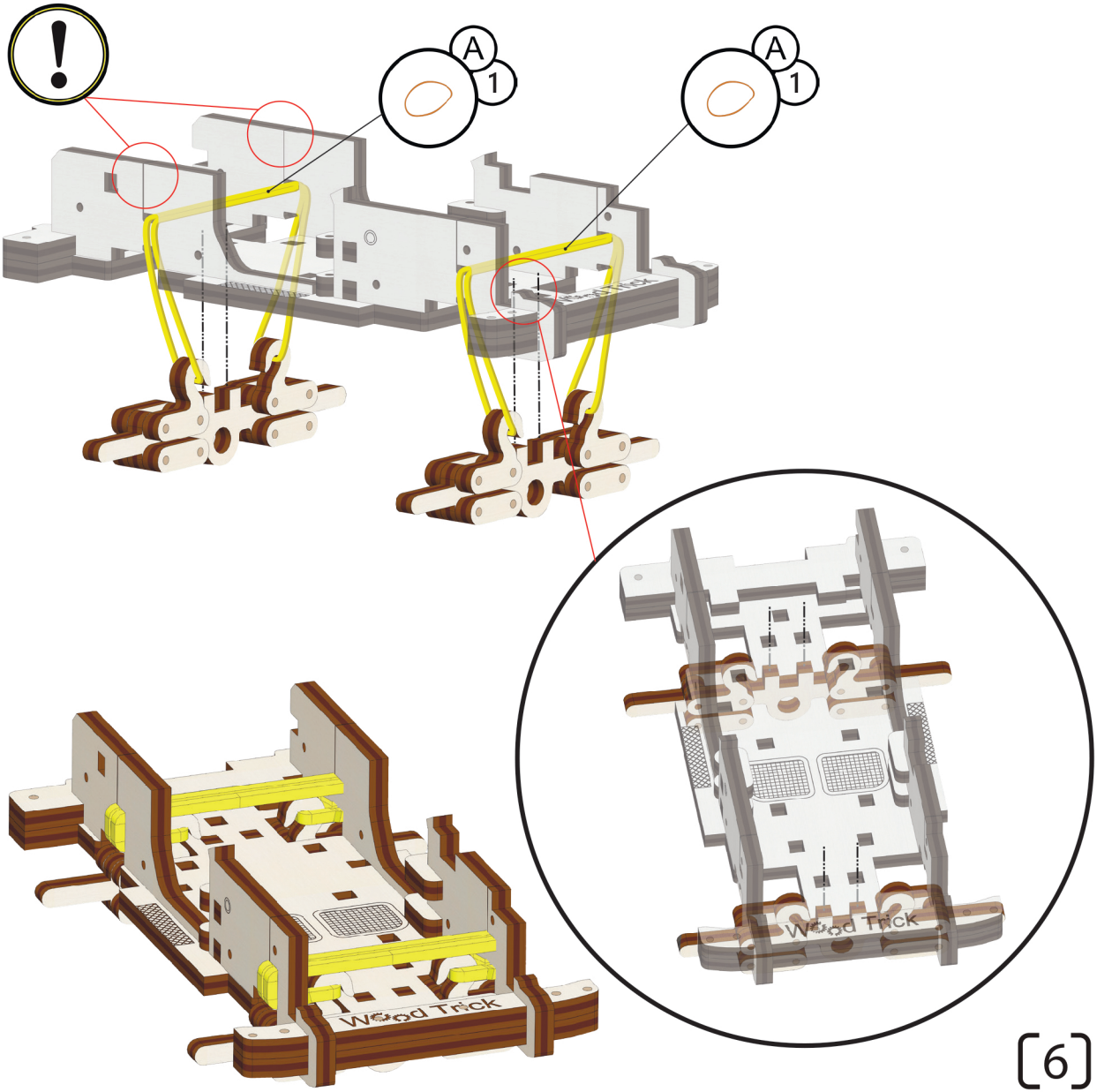
A
1
A
1
Wood Trick
Wood Trick
Wood Trick

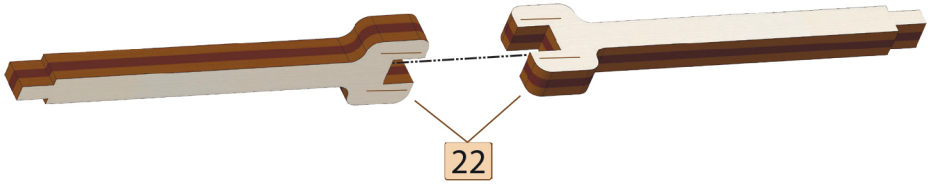

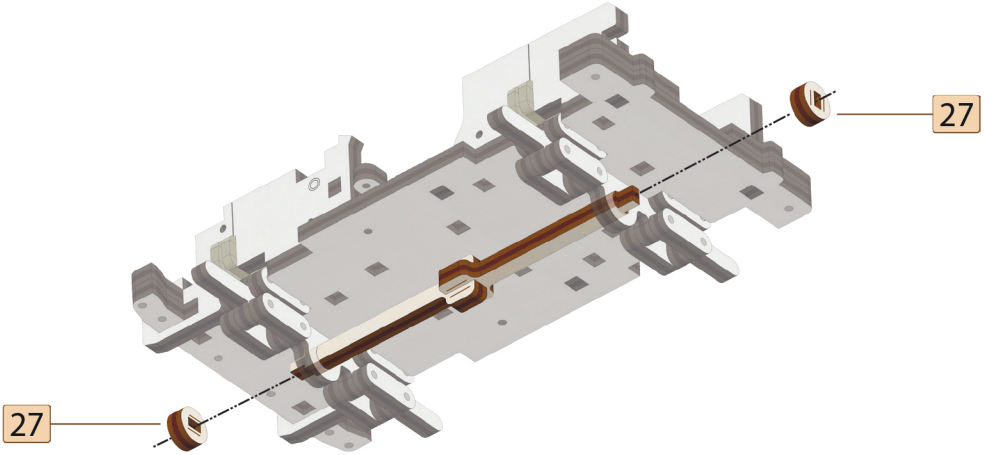

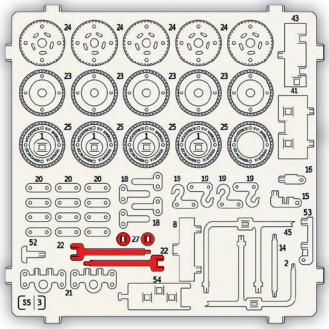

3

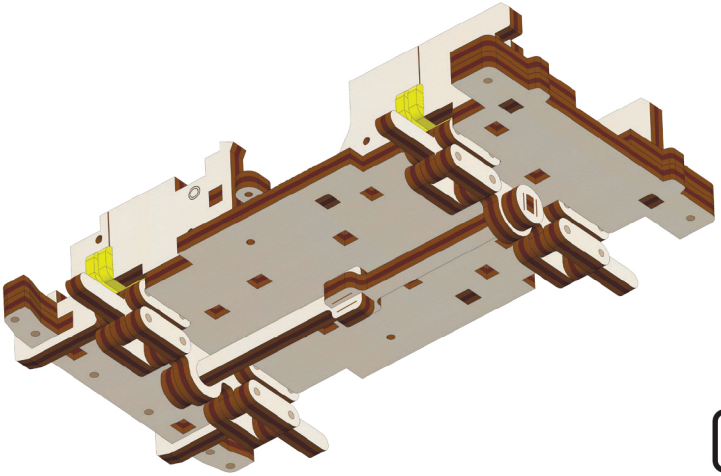

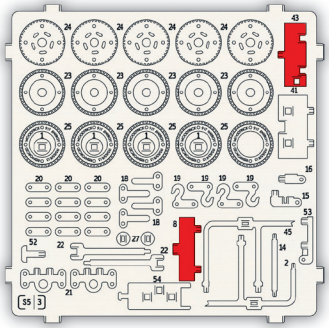

3

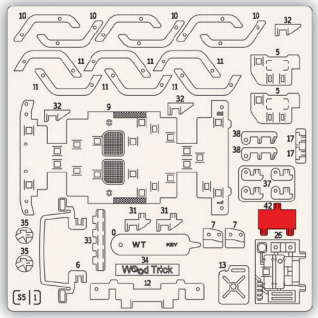

1

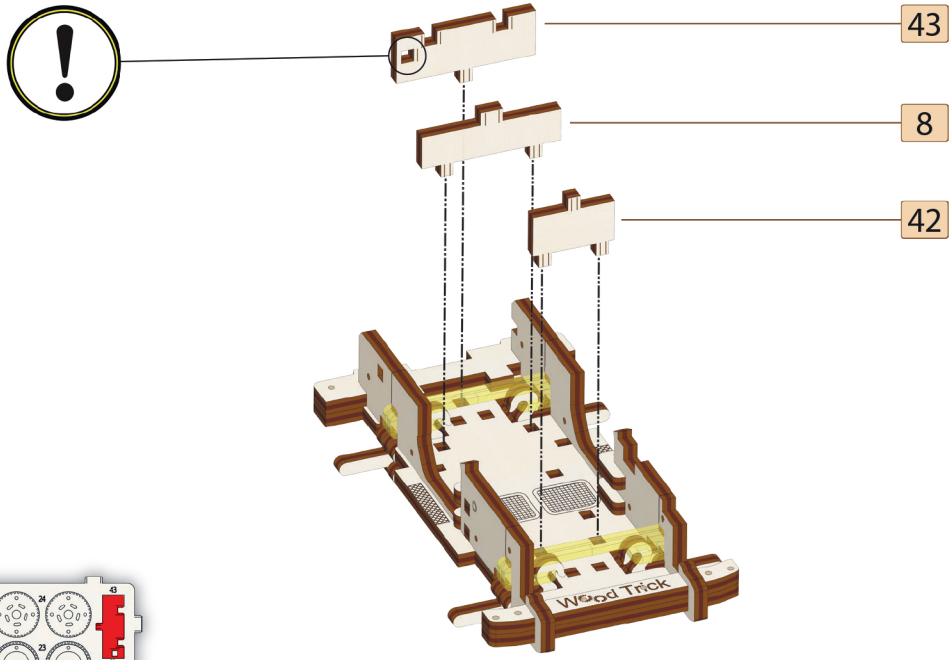

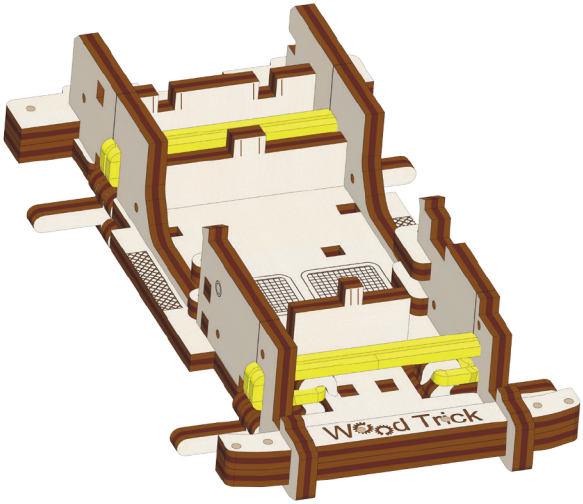

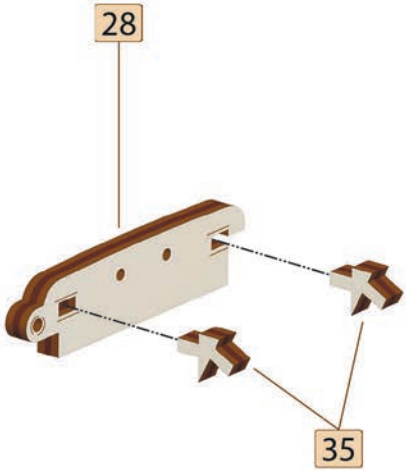

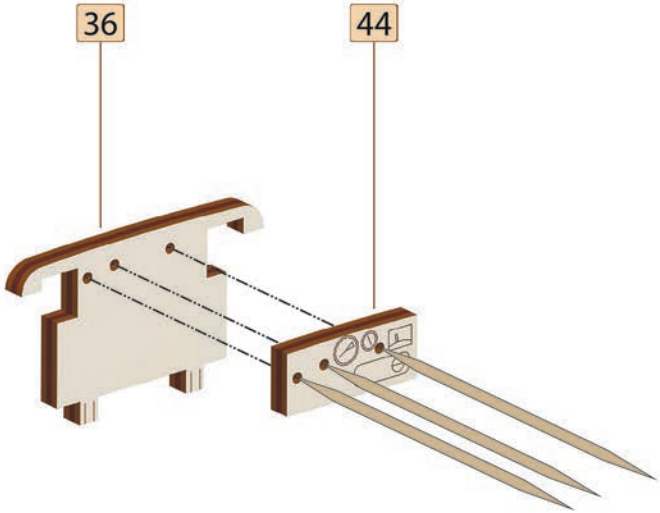

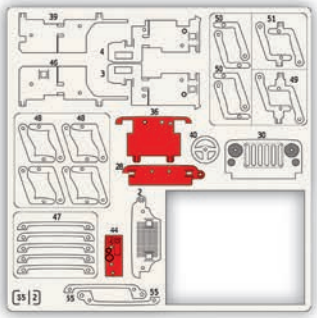

2

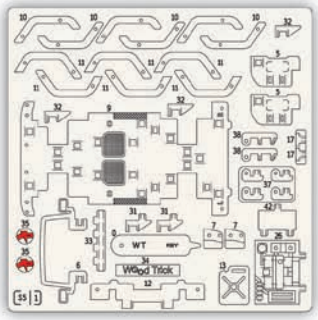

1

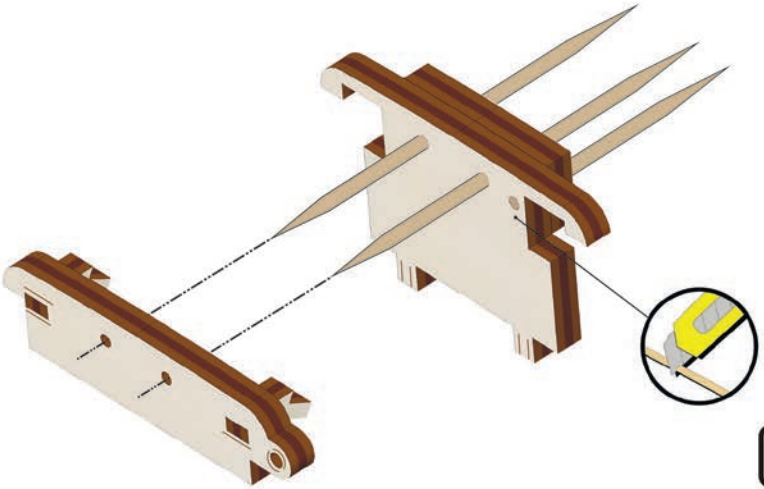

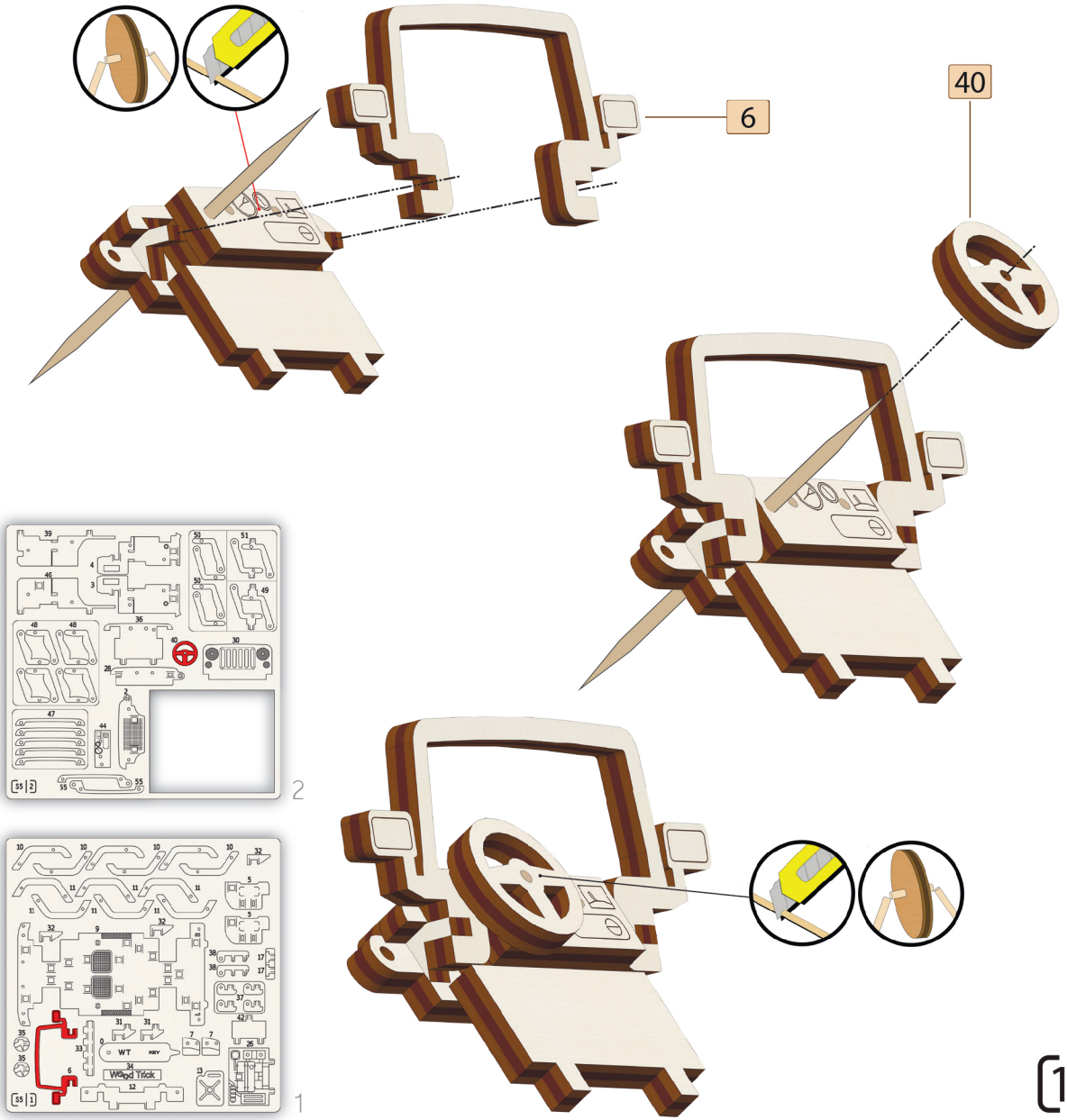
6
40
2
1
Wood Trick

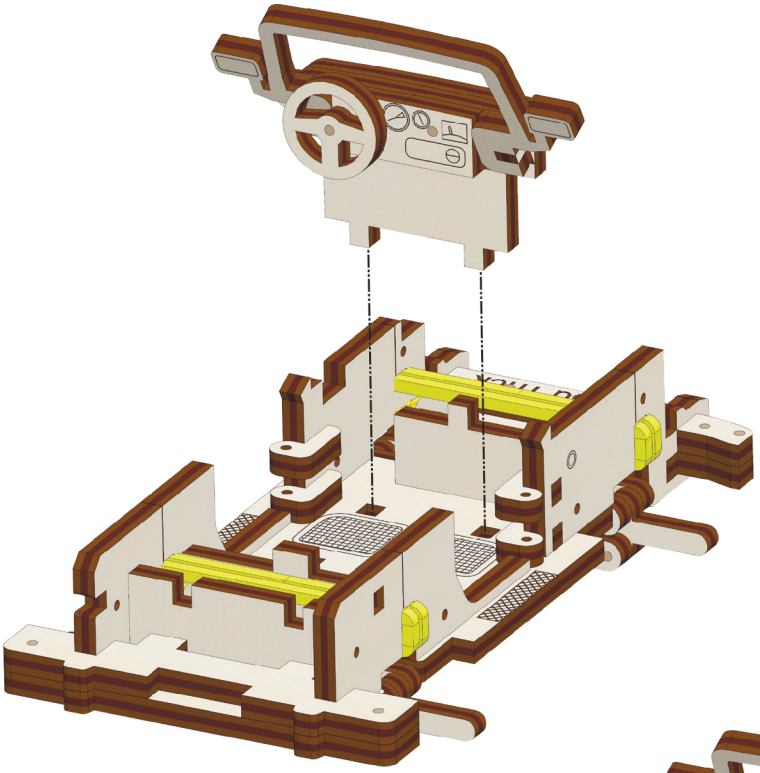

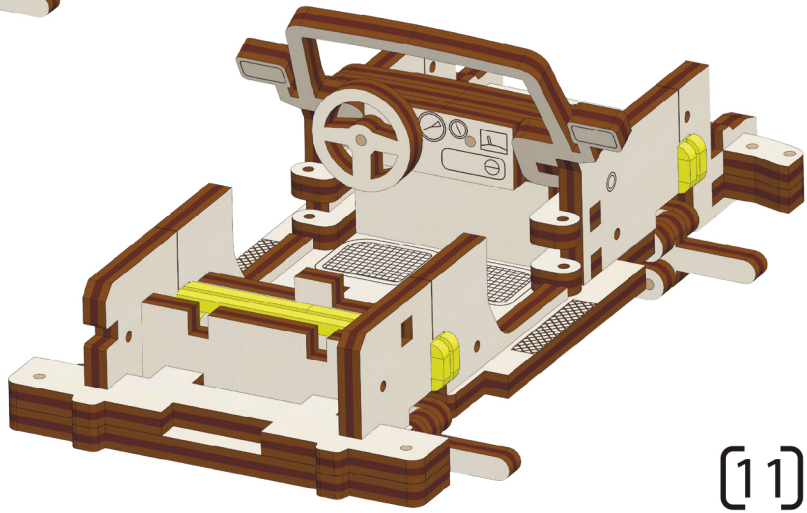

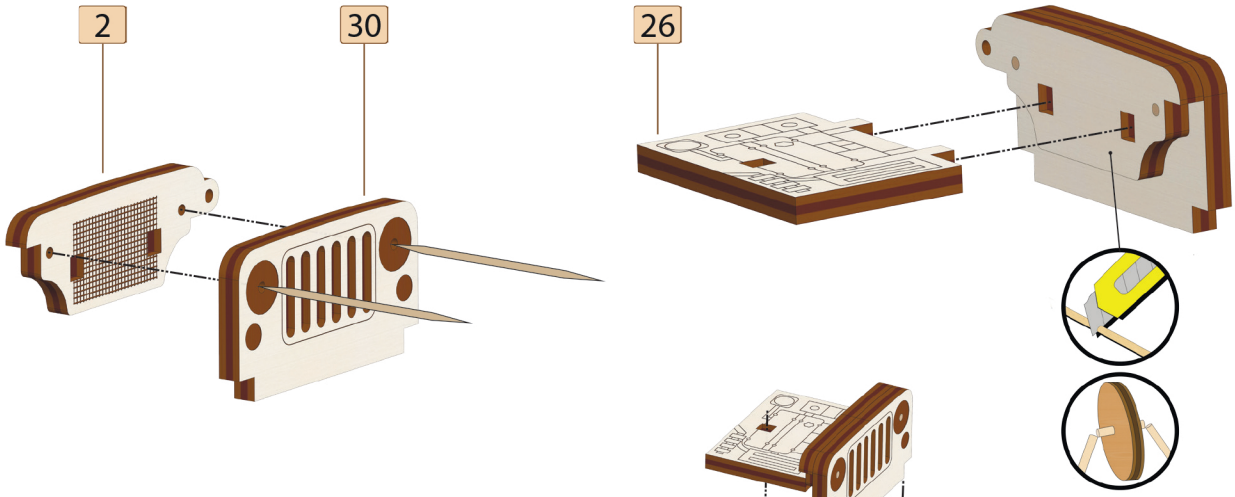

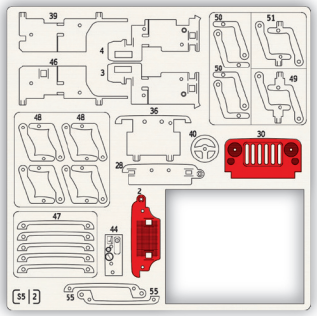

2

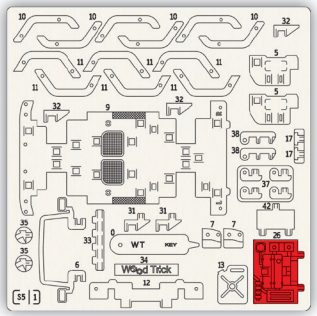

1

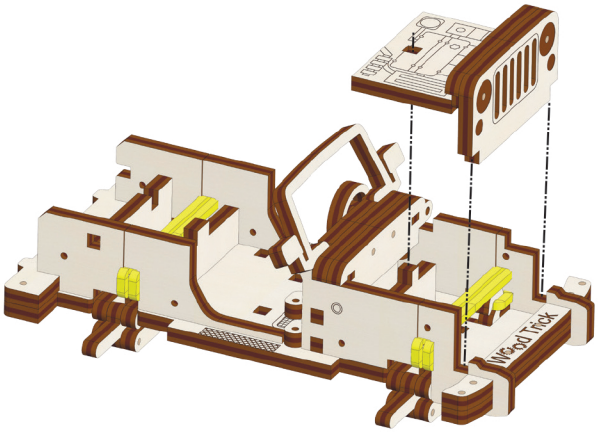

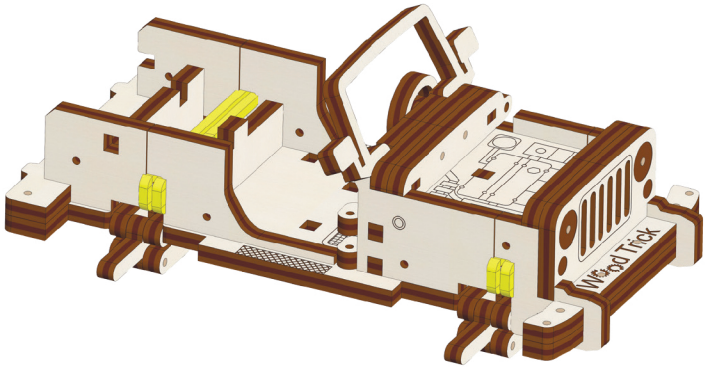

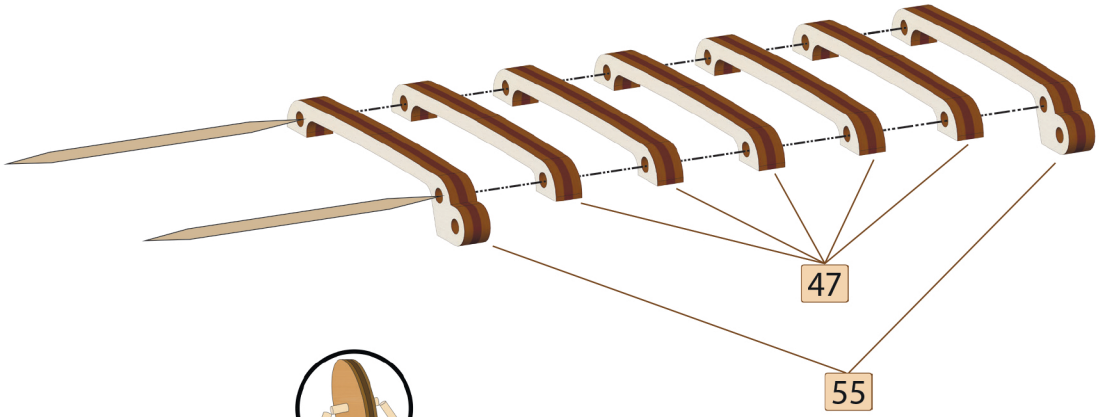
47
55

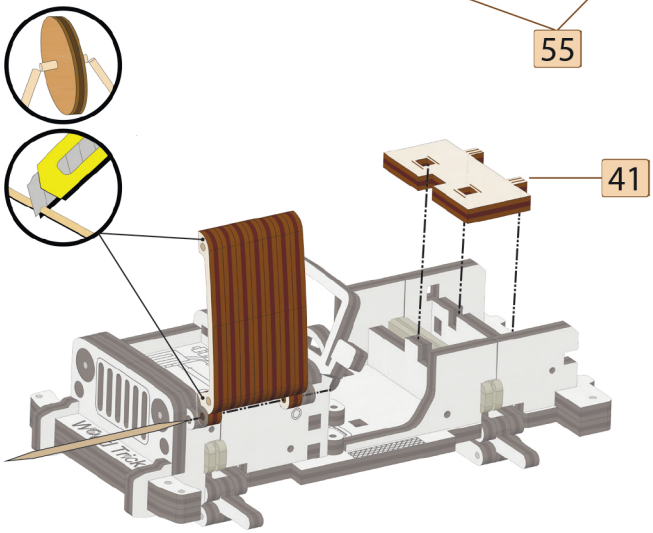
41
Wood Trick

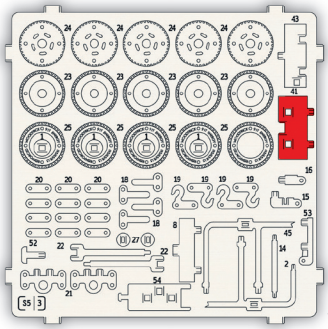
3

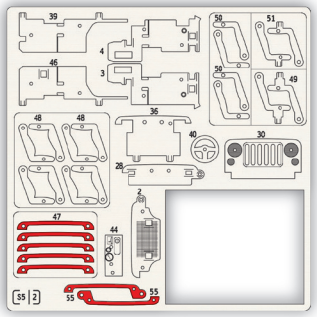
2

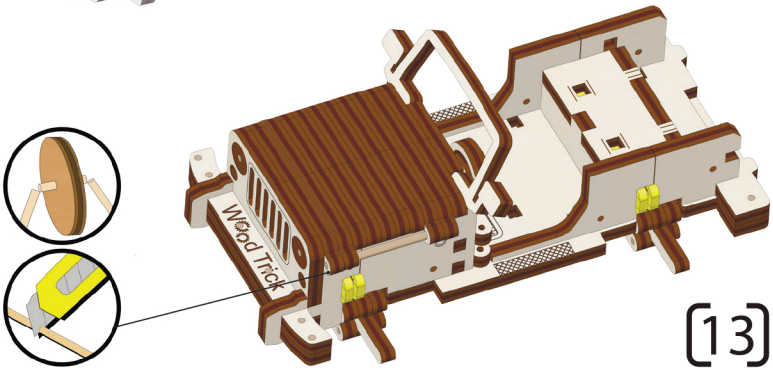
Wood Trick

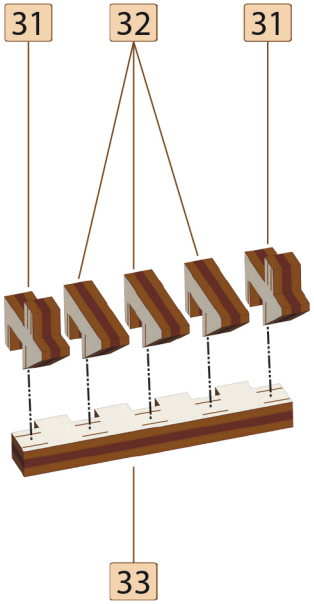
31
32
31
33

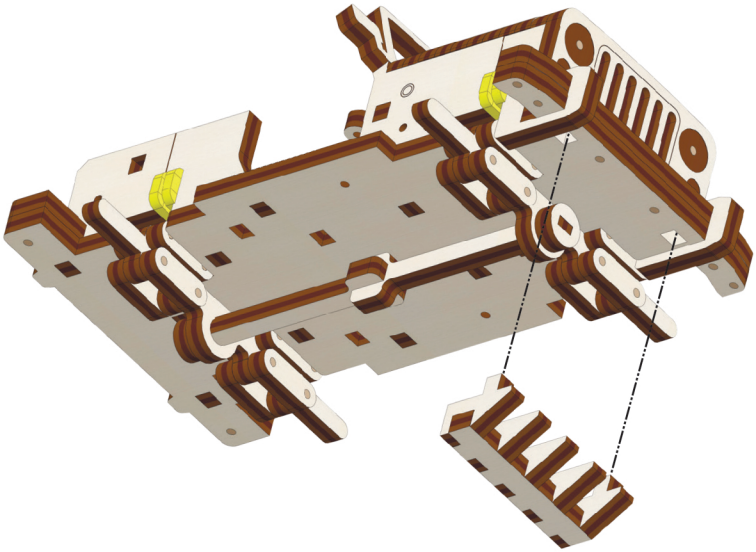

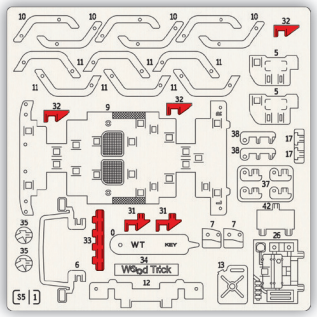
WT
Wood Track

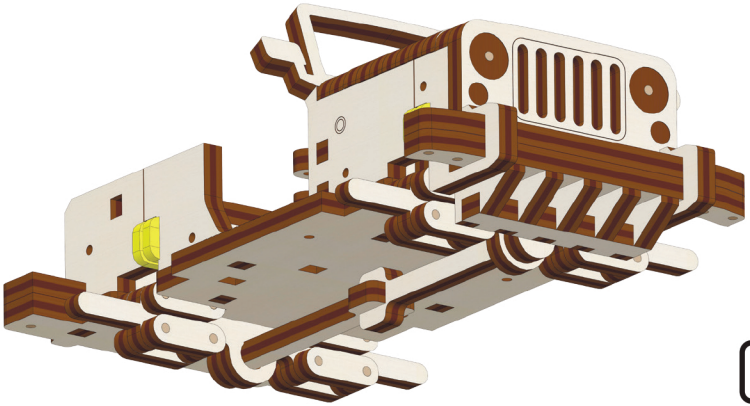

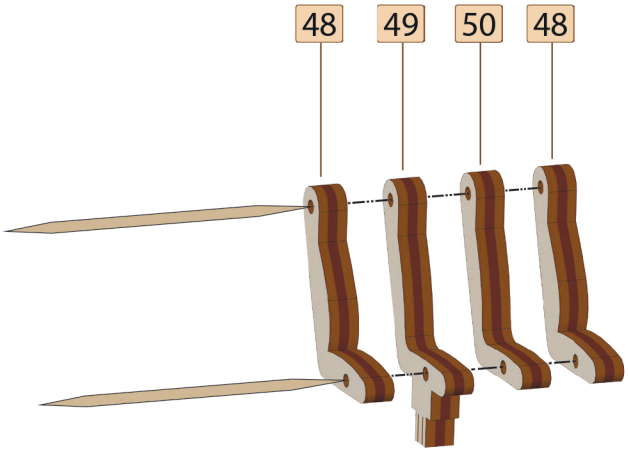

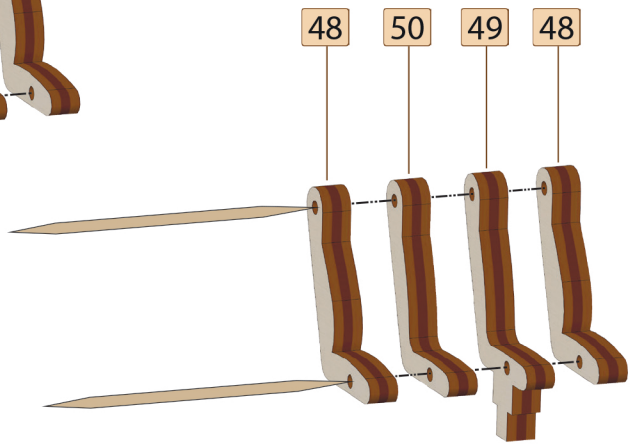

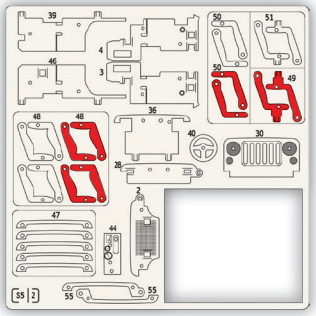

2

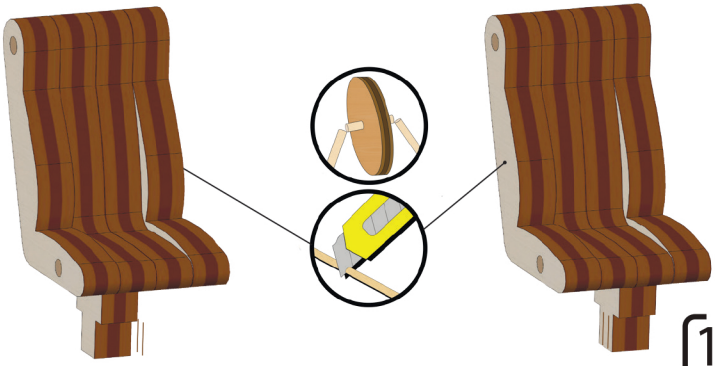

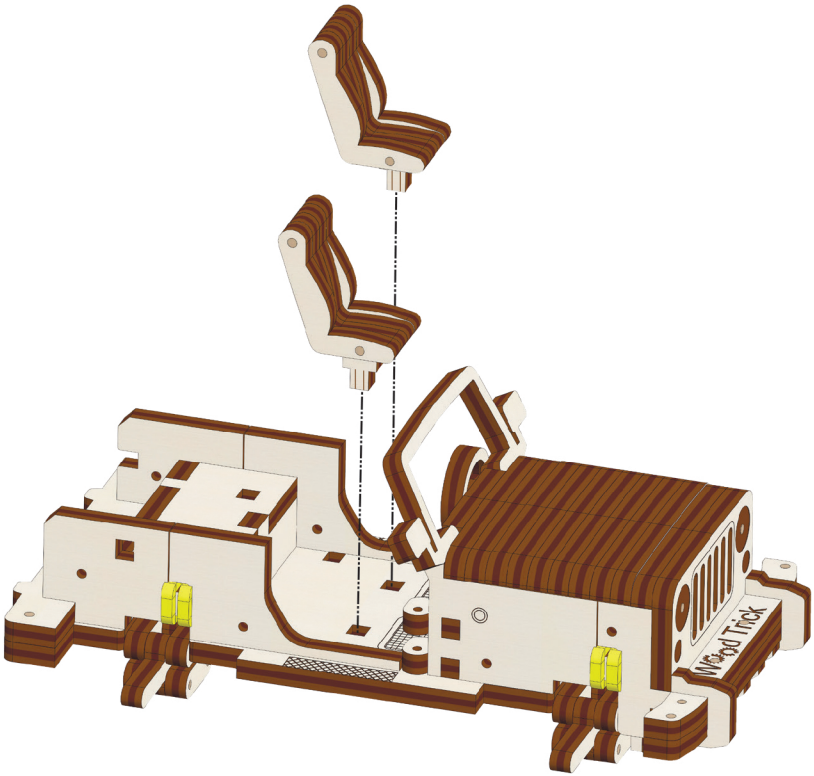
Wicked Trick

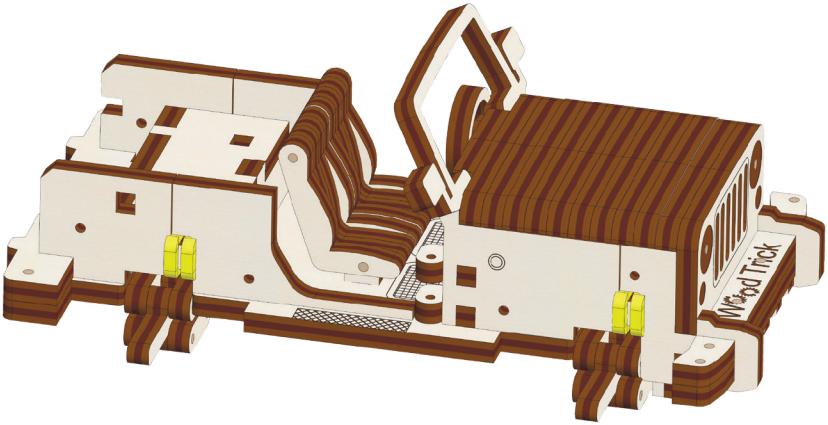
Wicked Trick

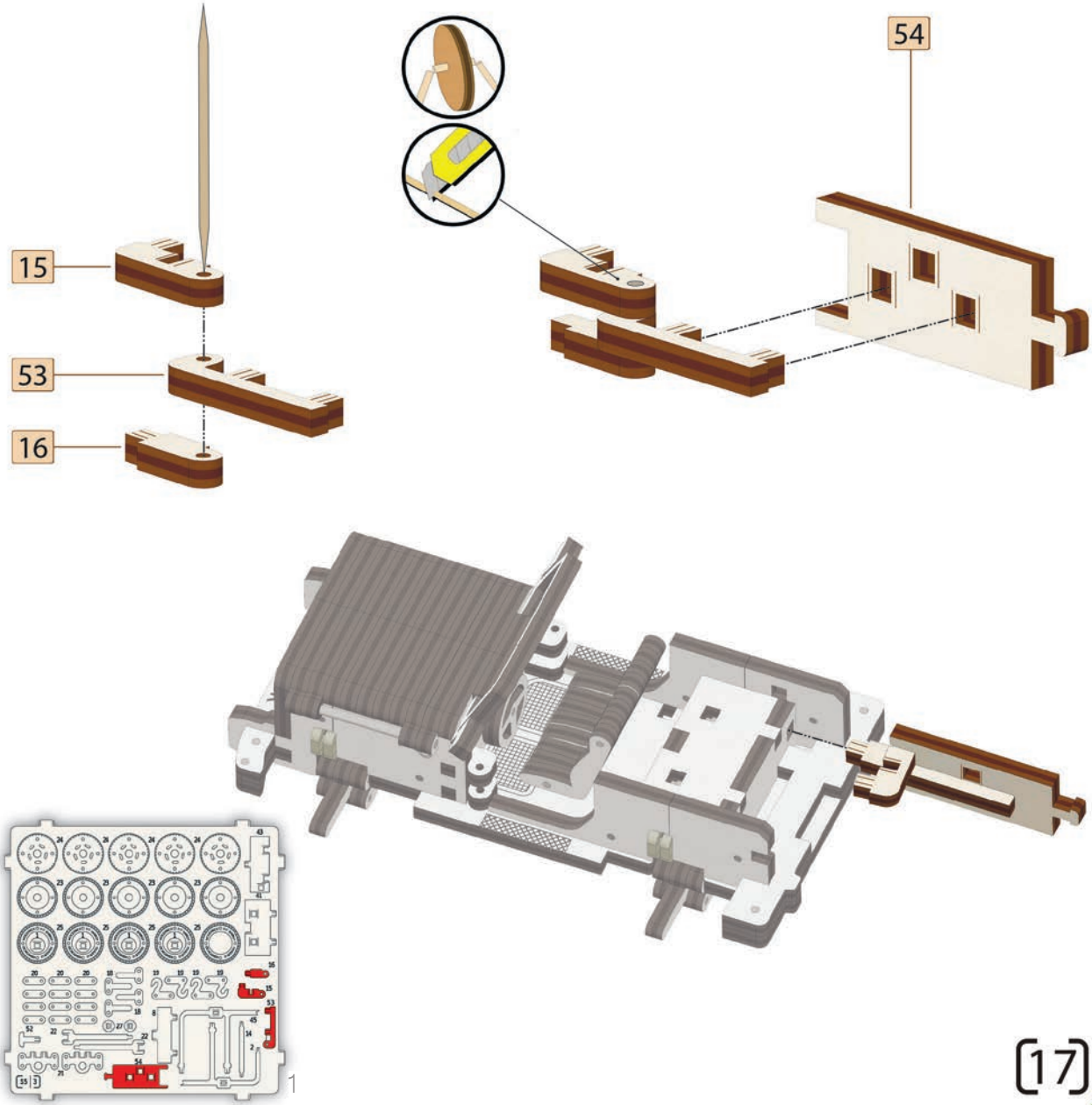
15
53
16
54
1

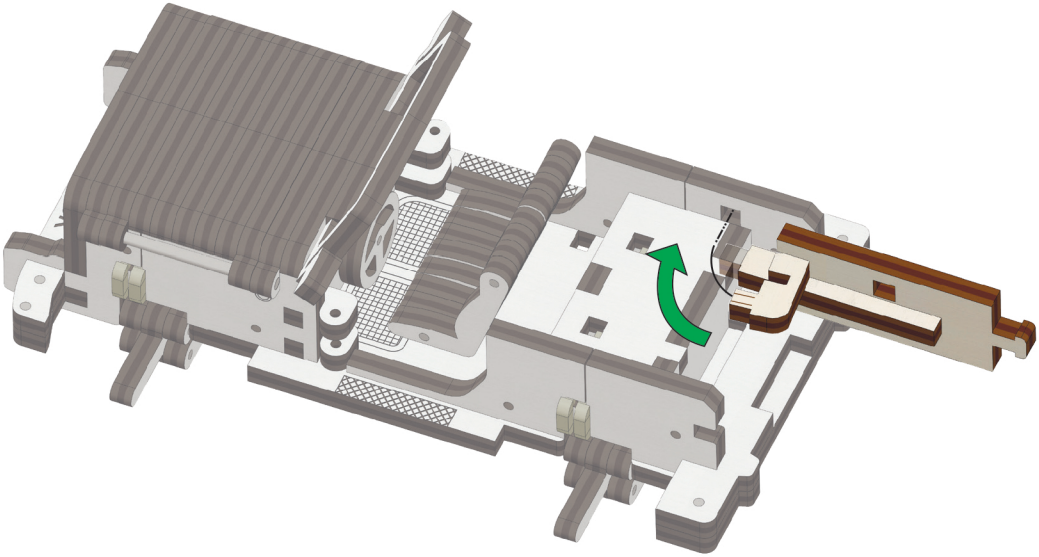

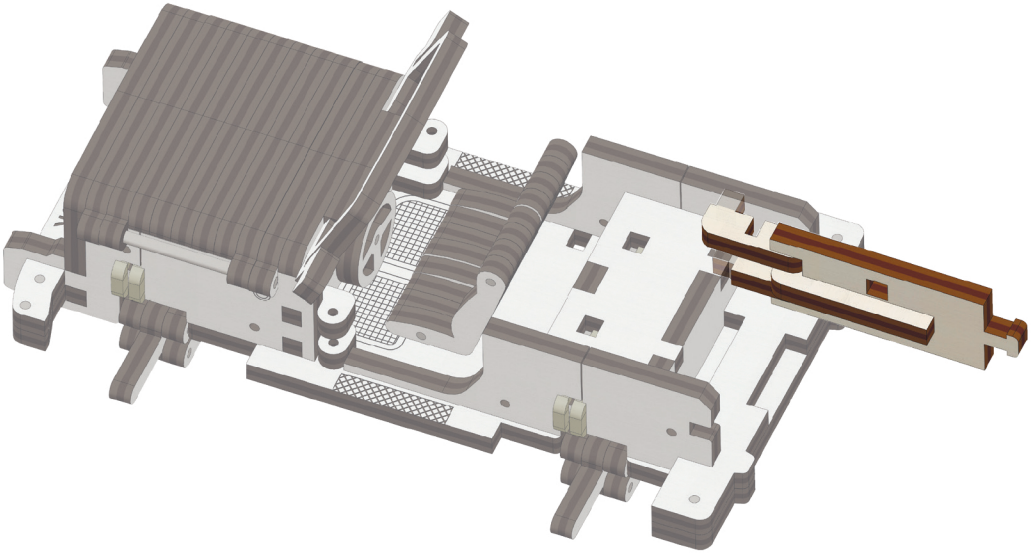

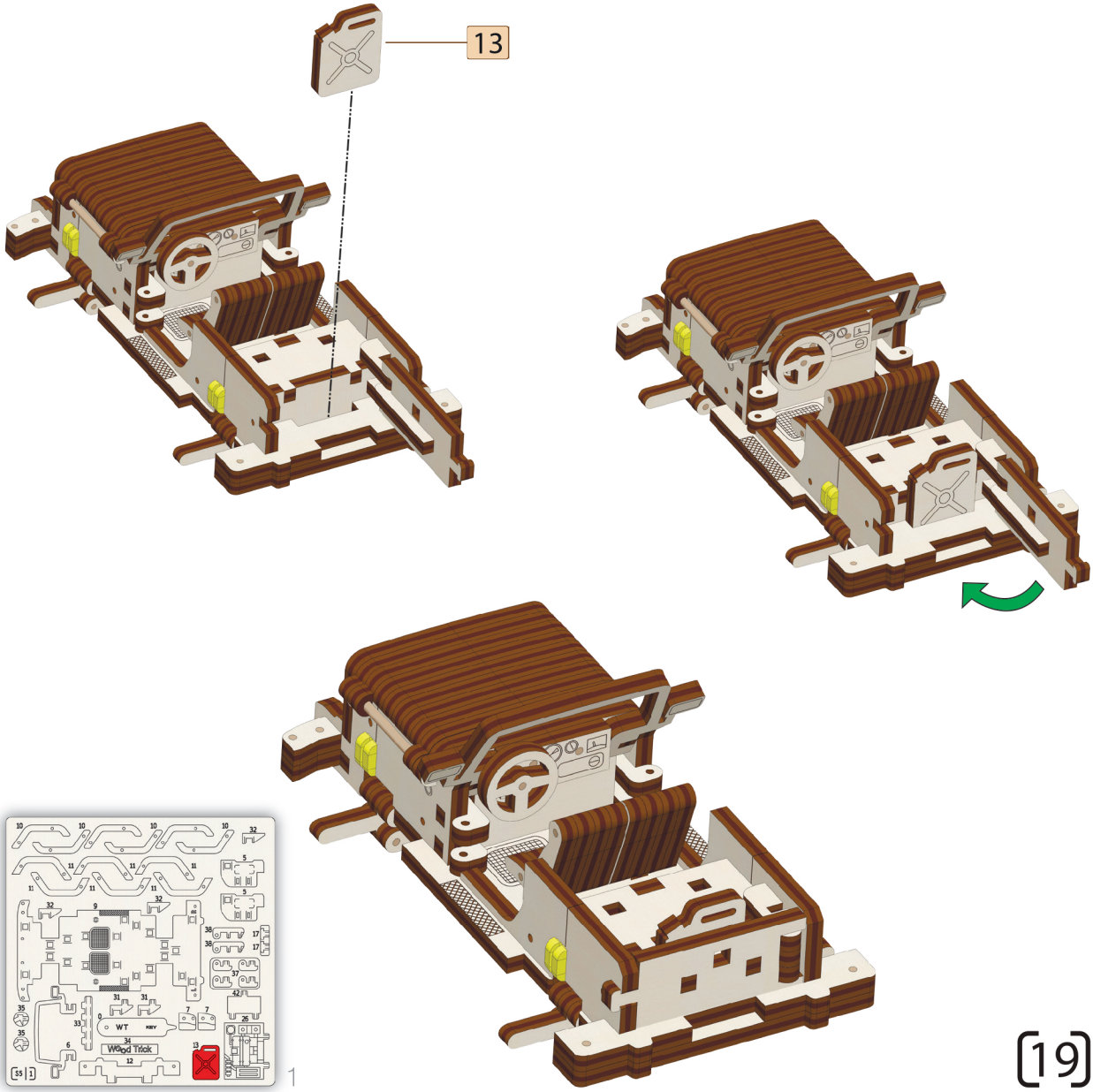
13
Wood Trick
1

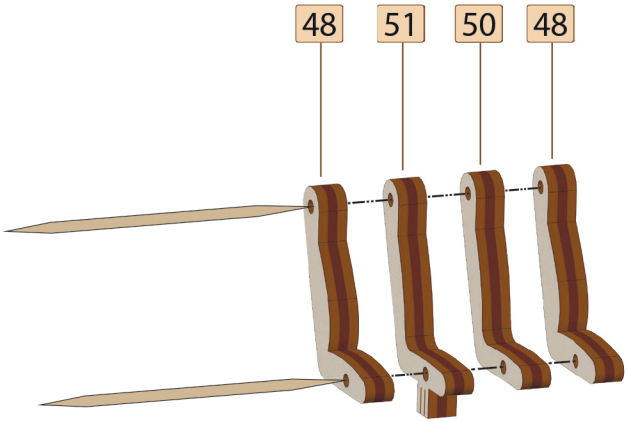

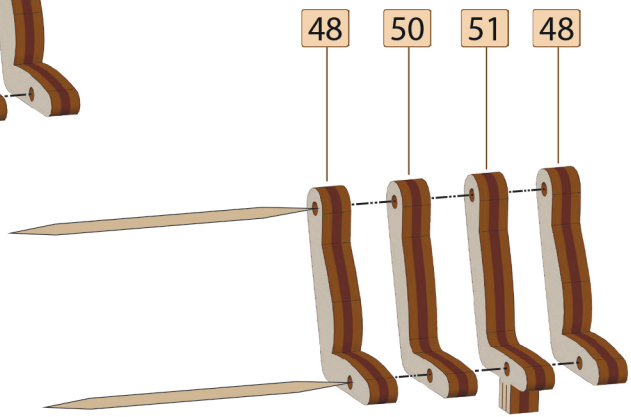

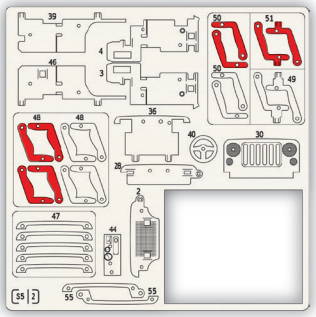

2

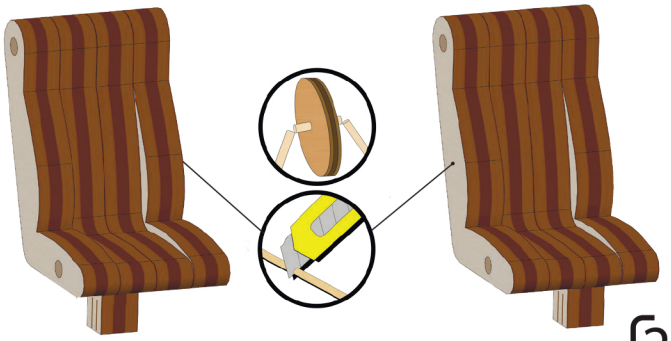

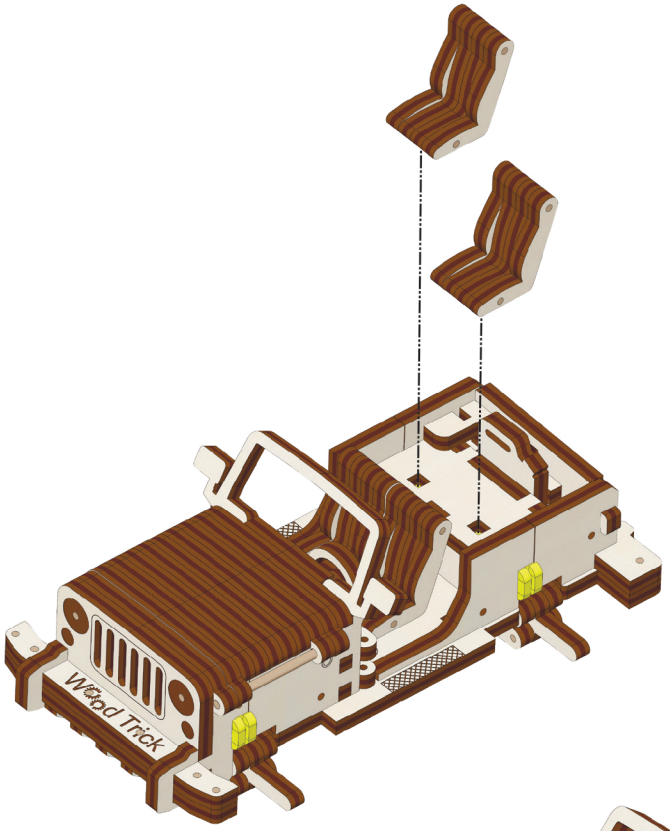
Wood Trick

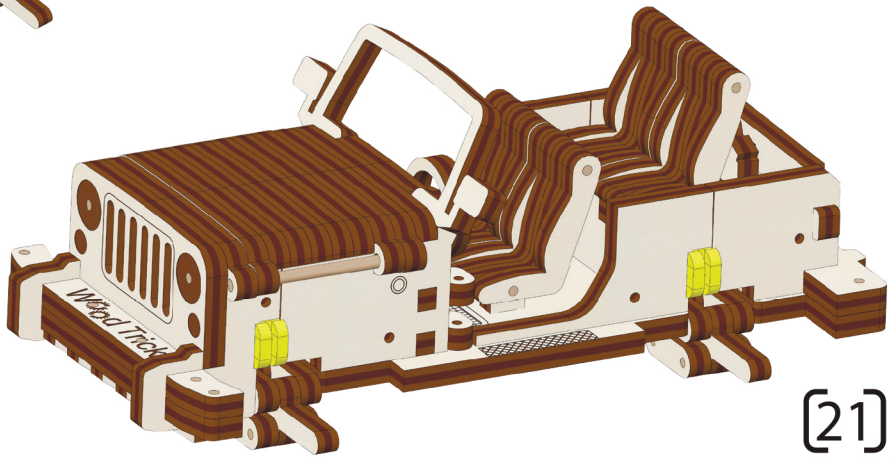
Wood Trick

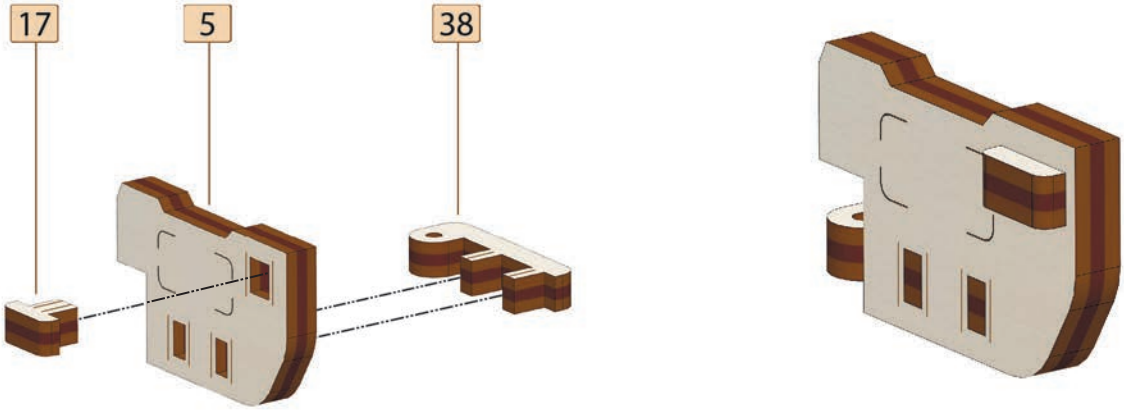

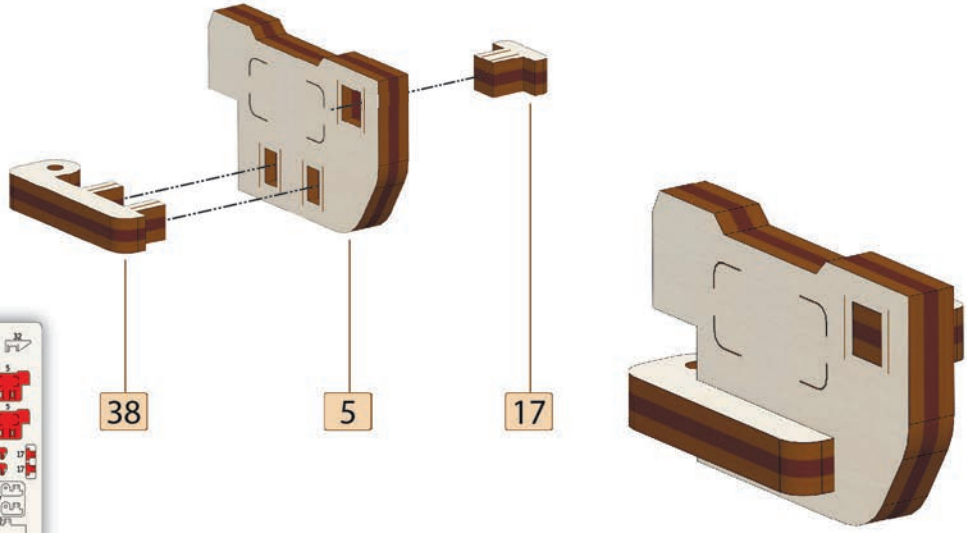

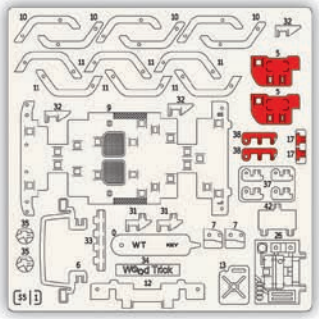

1

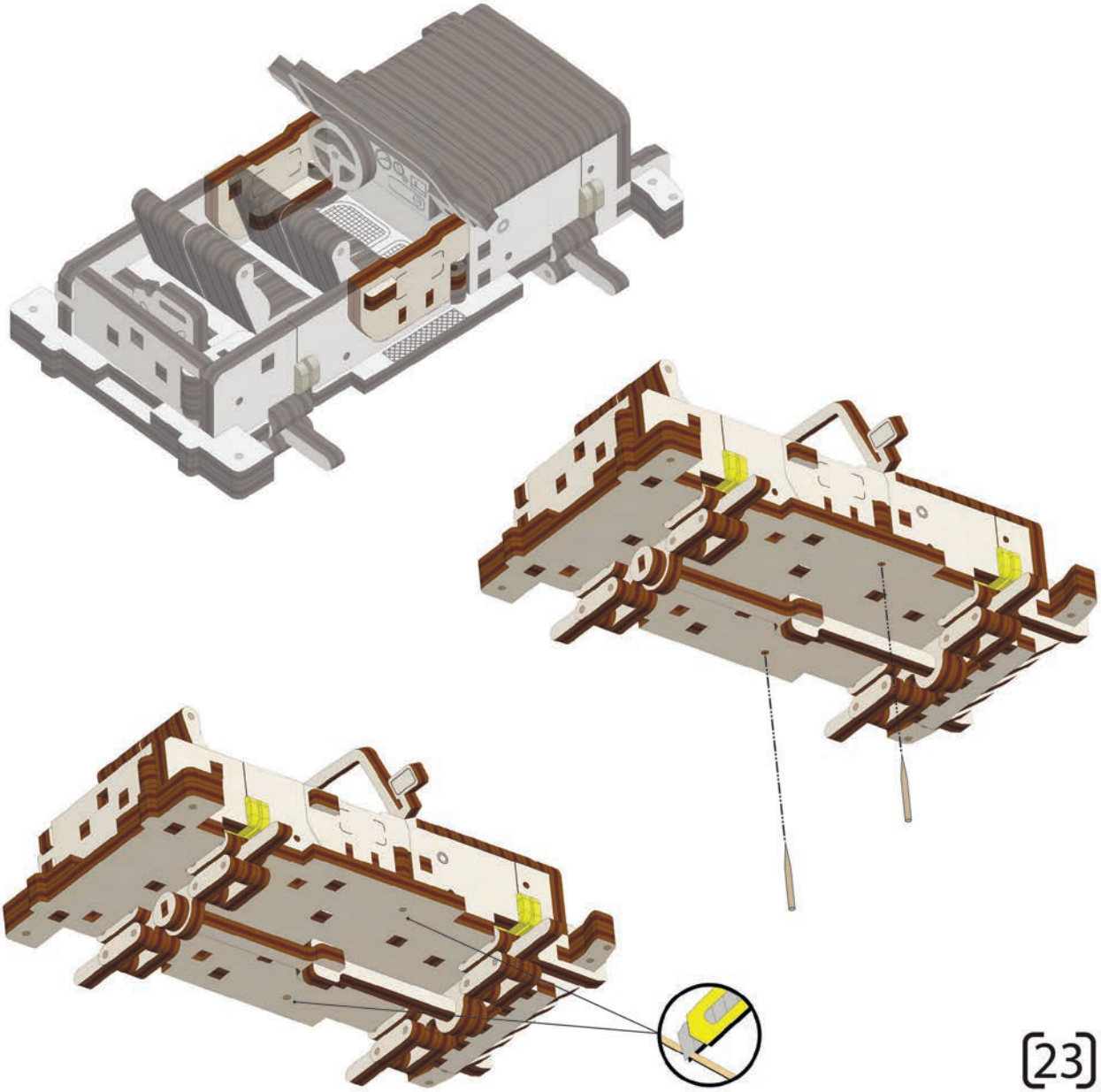

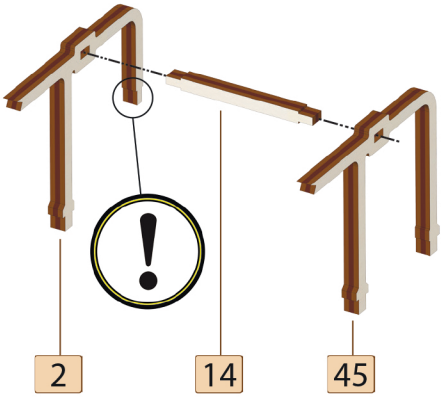
2
14
45

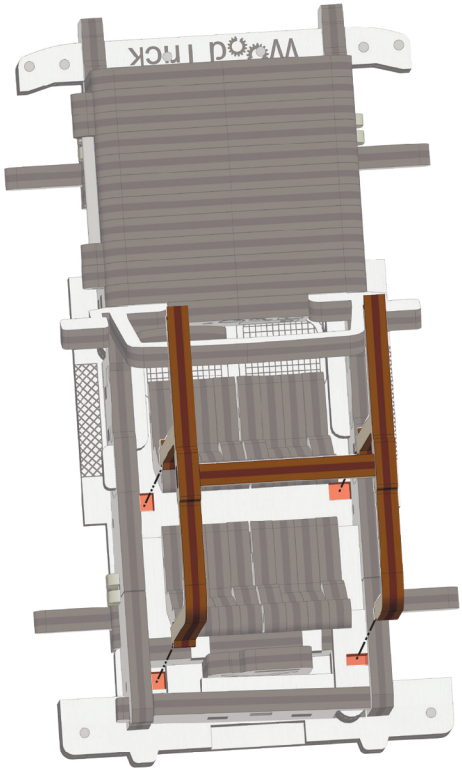
Wood Trick

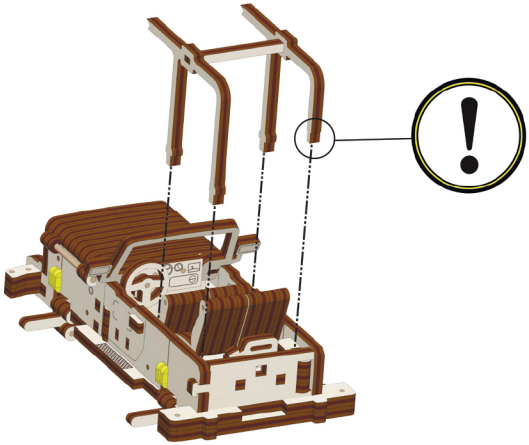

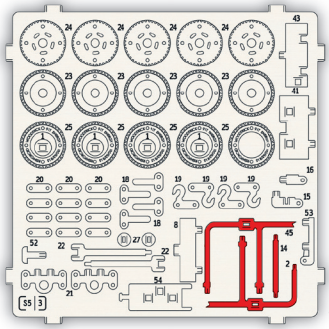

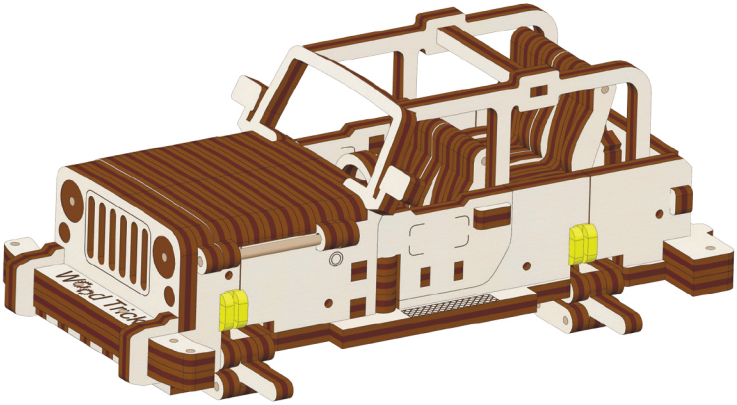
Wood Trick

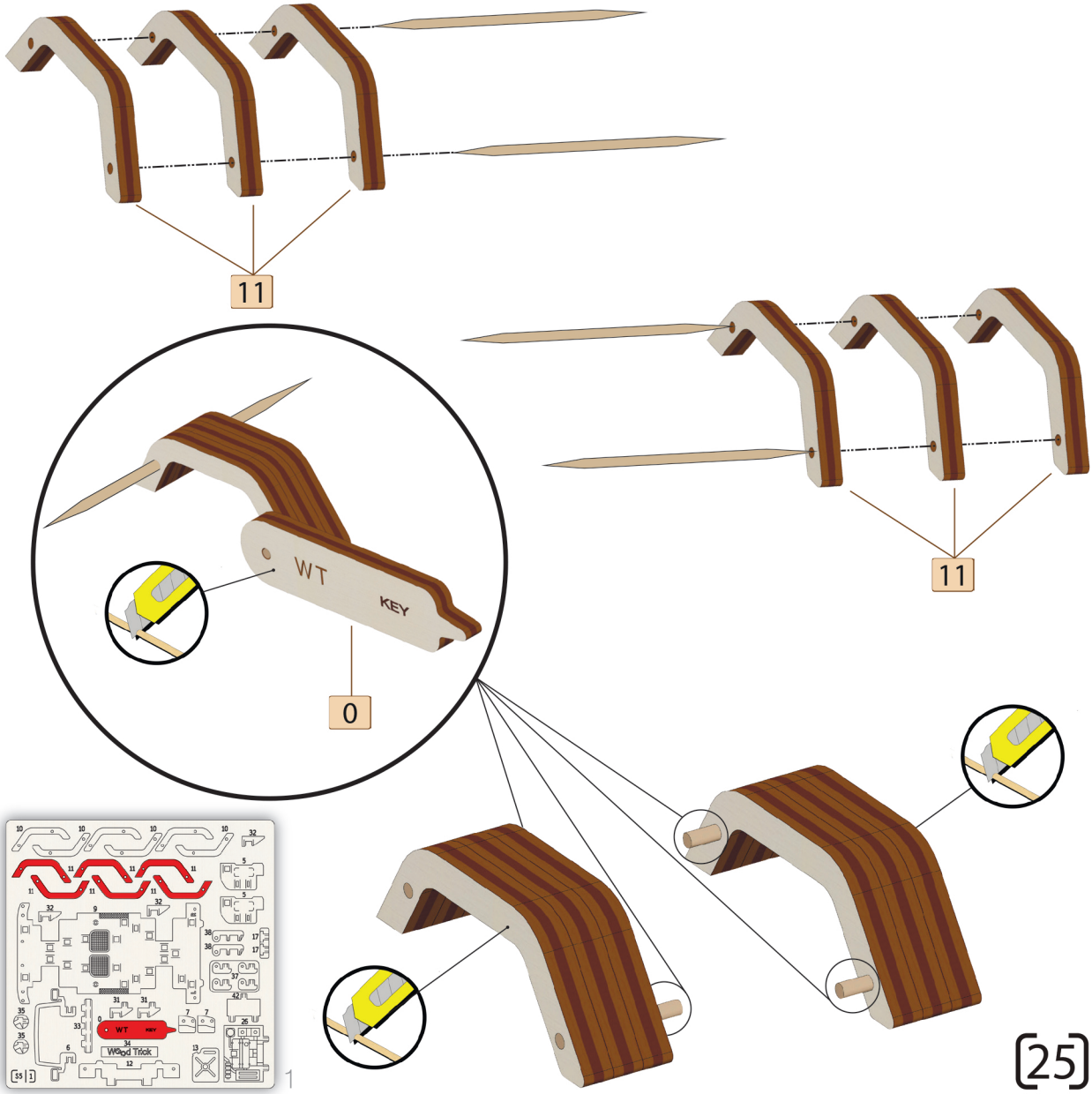
11
11
WT
KEY
0
WT
KEY
Wood Trick

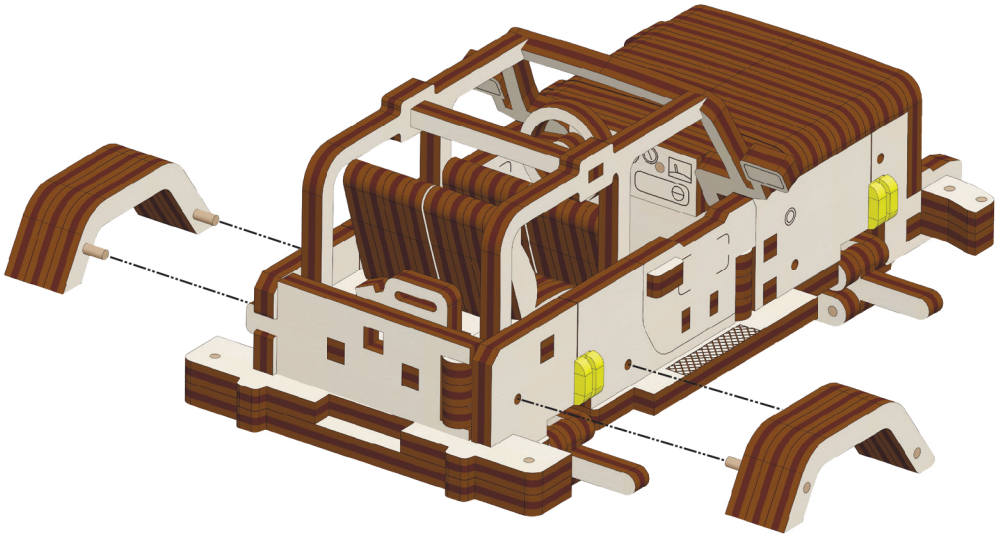

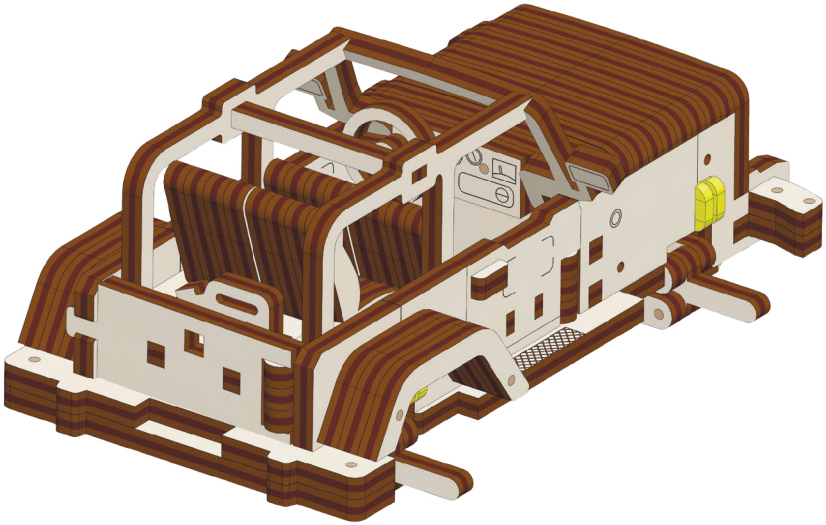

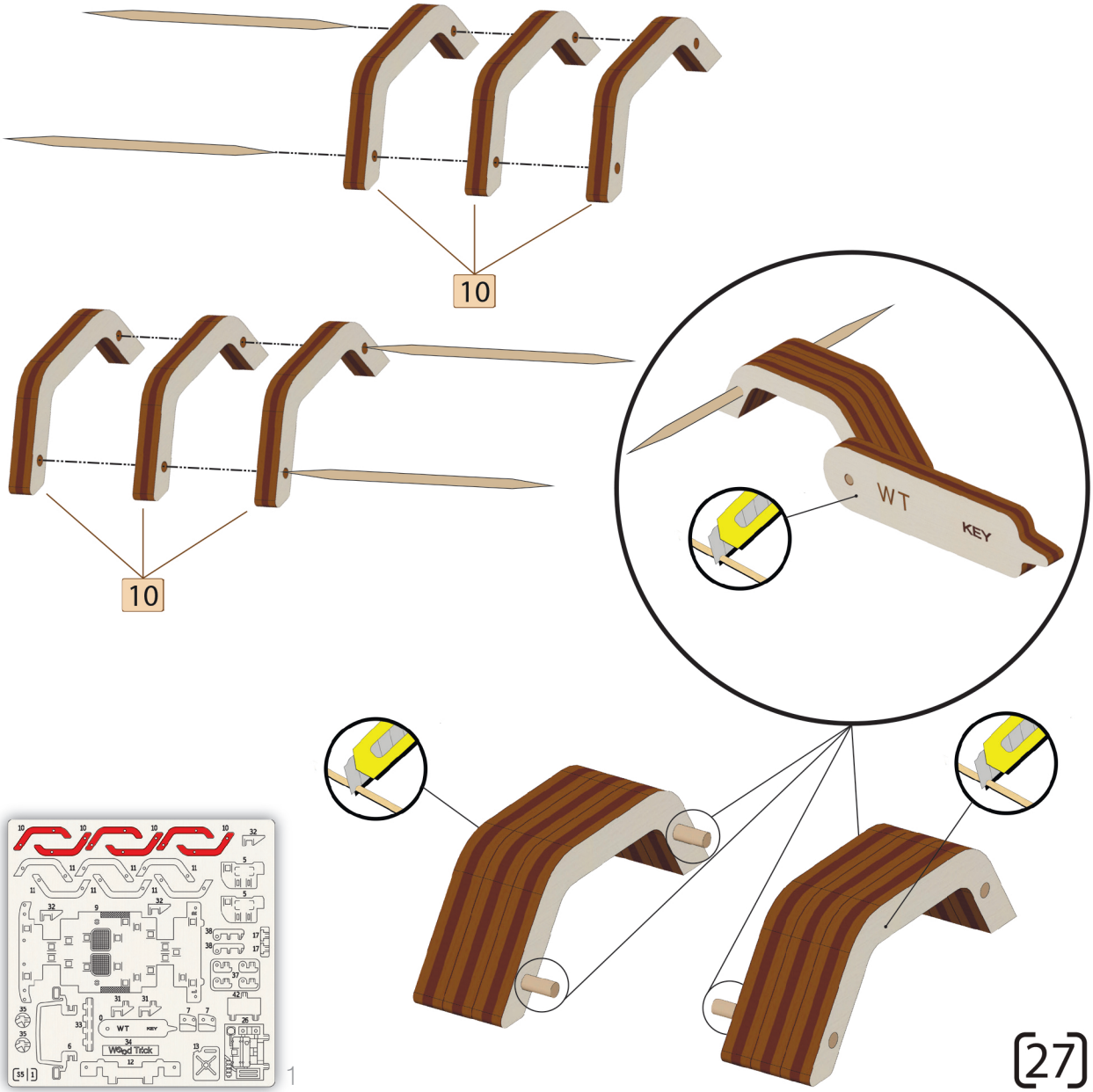
10
10
WT
KEY
WT
KEY
Wood Track
1

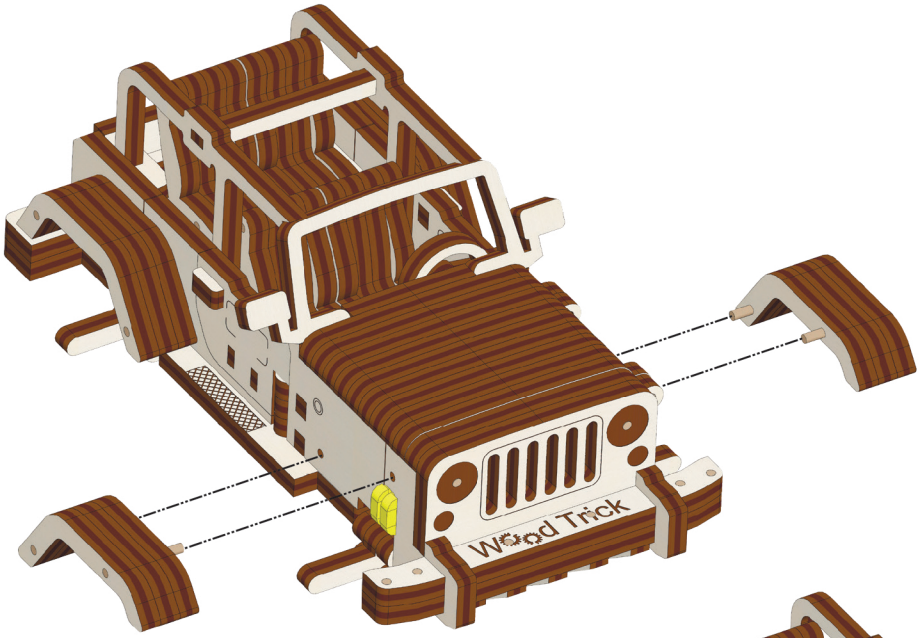
Wood Trick

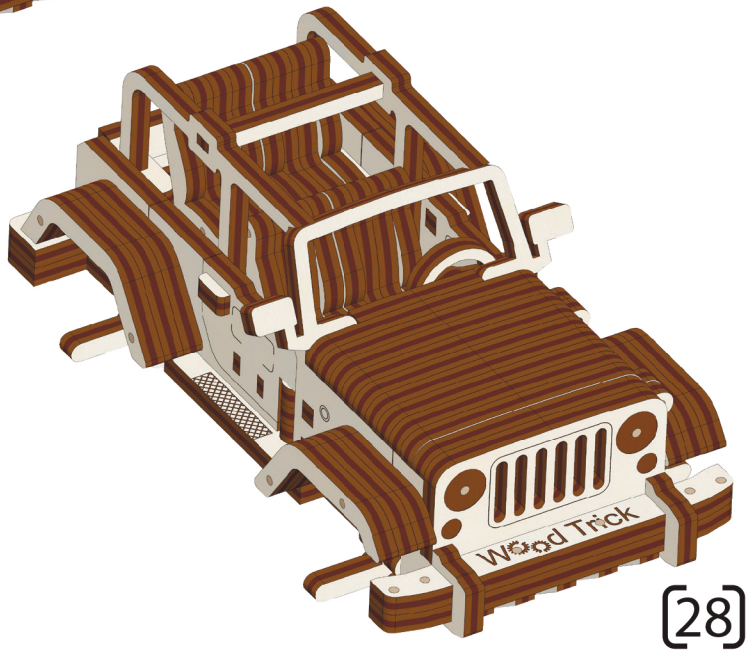
Wood Trick

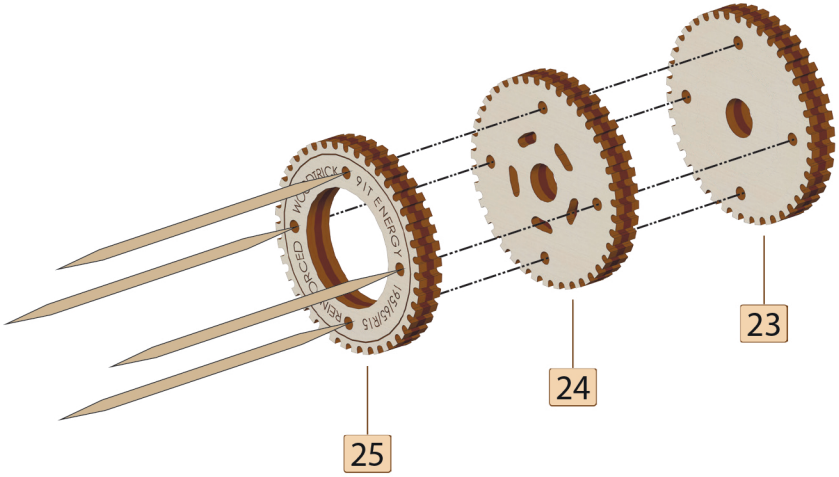
WOODTRICK
91T ENERGY
REINFORCED
195/65/R15
25
24
23

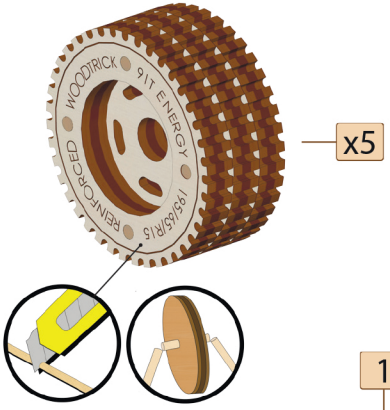
WOODTRICK
91T ENERGY
REINFORCED
195/65/R15
x5

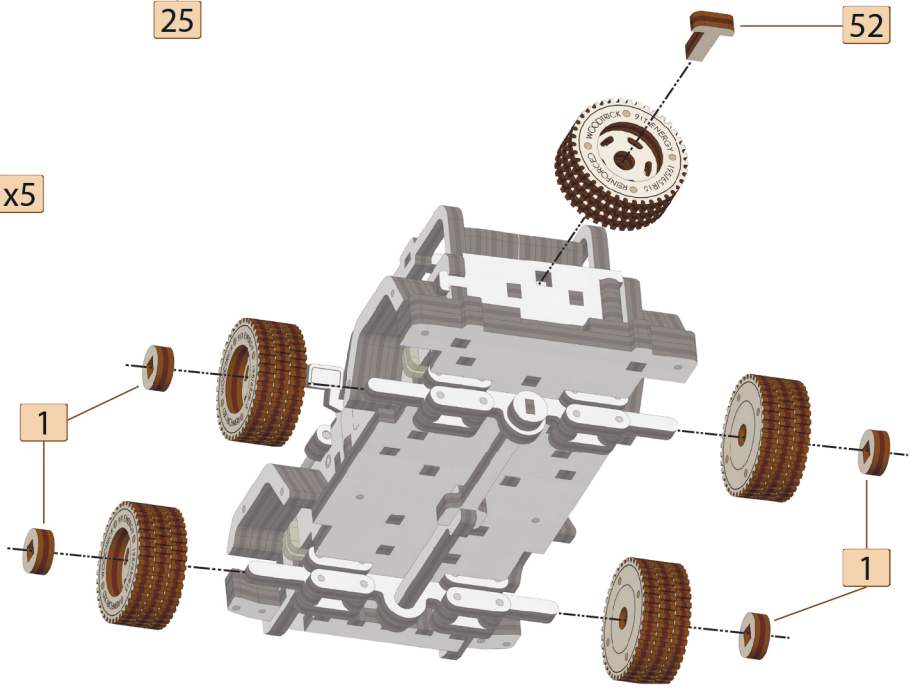
52
1
1

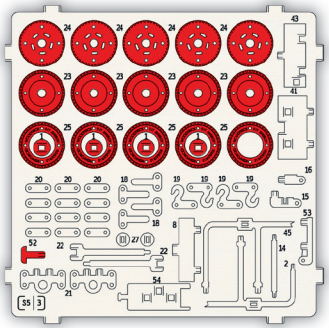

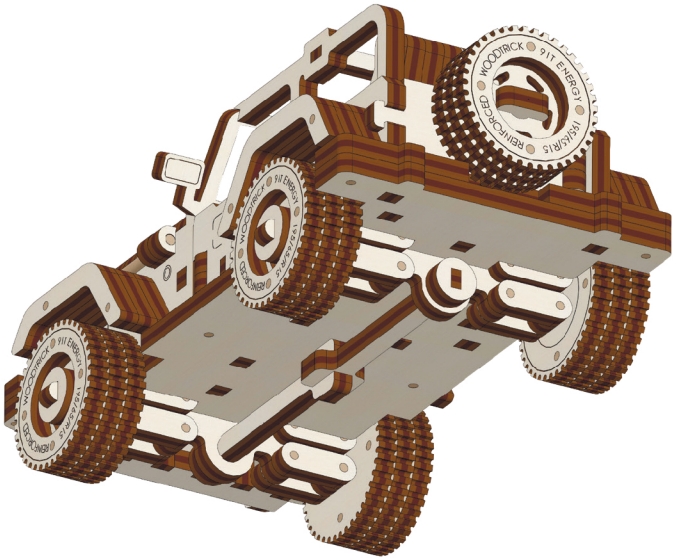
WOODTRICK
9 IT ENERGY
REINFORCED
19-24-5/R15

Wood Trick
WOODTRICK
9 IT ENERGY
REINFORCED
19-24-5/R15

Wood Trick
NM 183
BUY TWO ADDITIONS FOR BIG RIG
Wood Trick
A NEW WORLD OF ART
INTERIOR COLLECTION
CAR TRAILER & JEEP
TANK TRAILER
MECHANICAL 3D PUZZLE BIG RIG
FROM AMUSEMENT TO MECHANICS