Wood Trick
Wood Trick®
A NEW WORLD OF ART

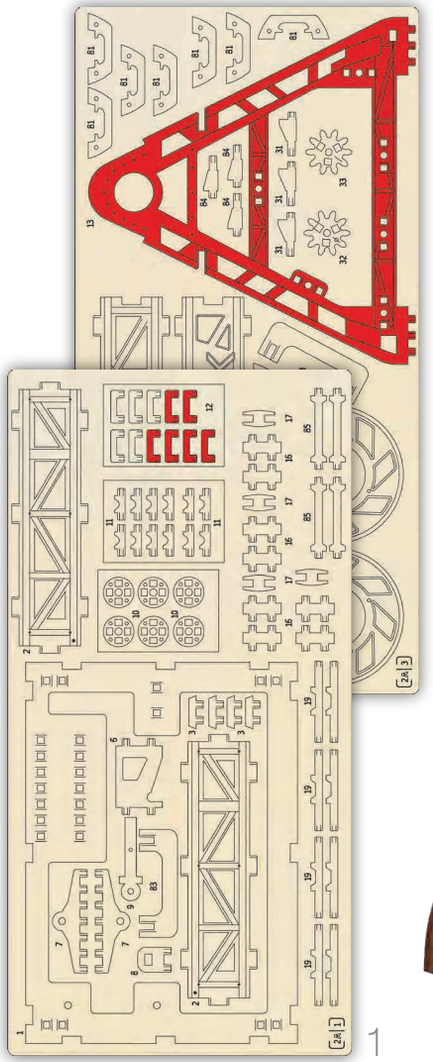

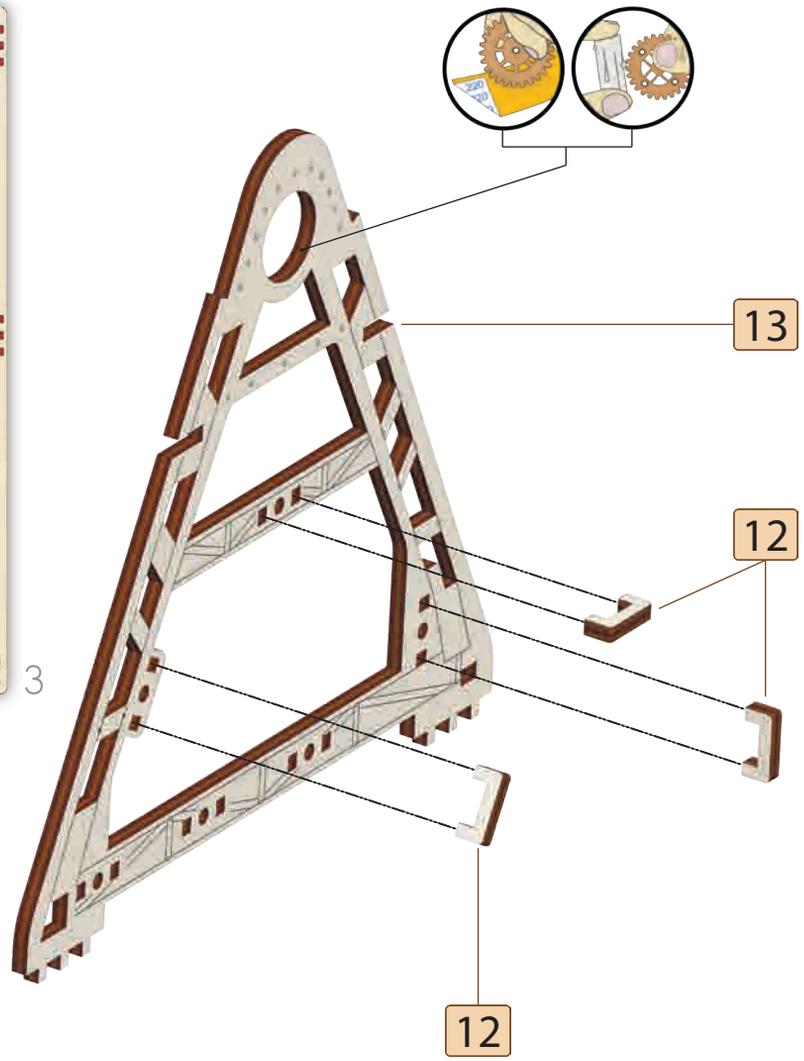

[1]

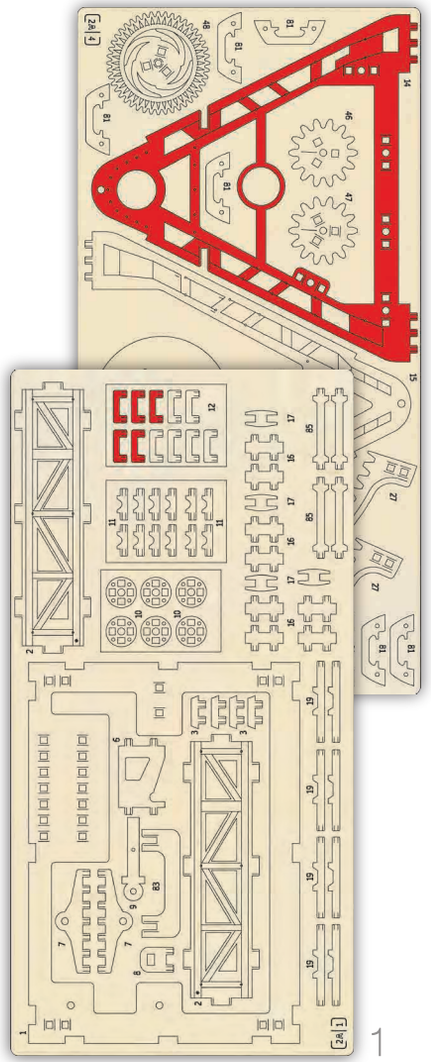

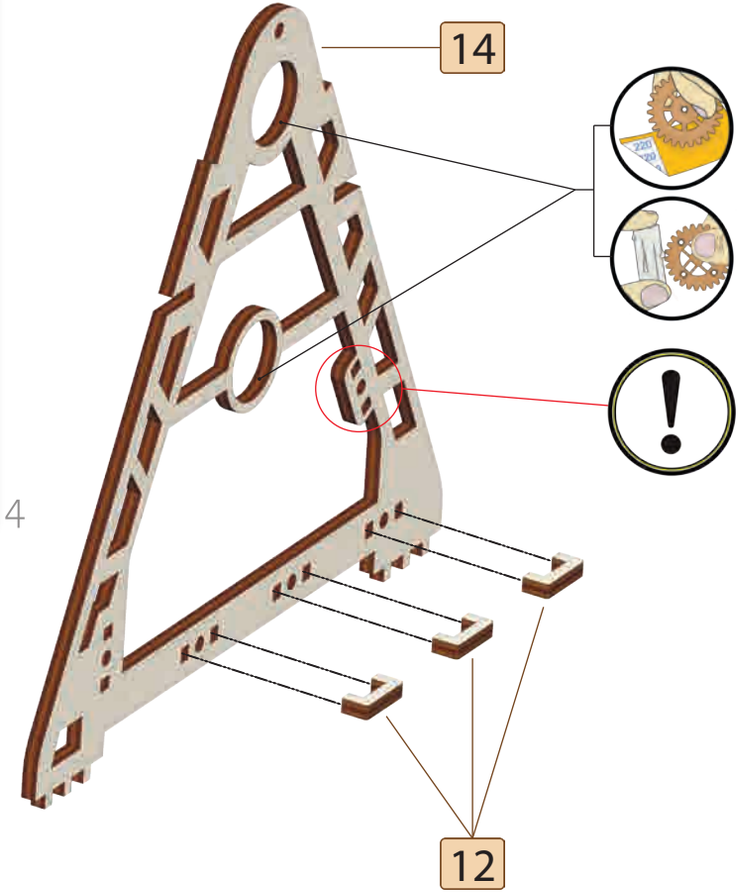

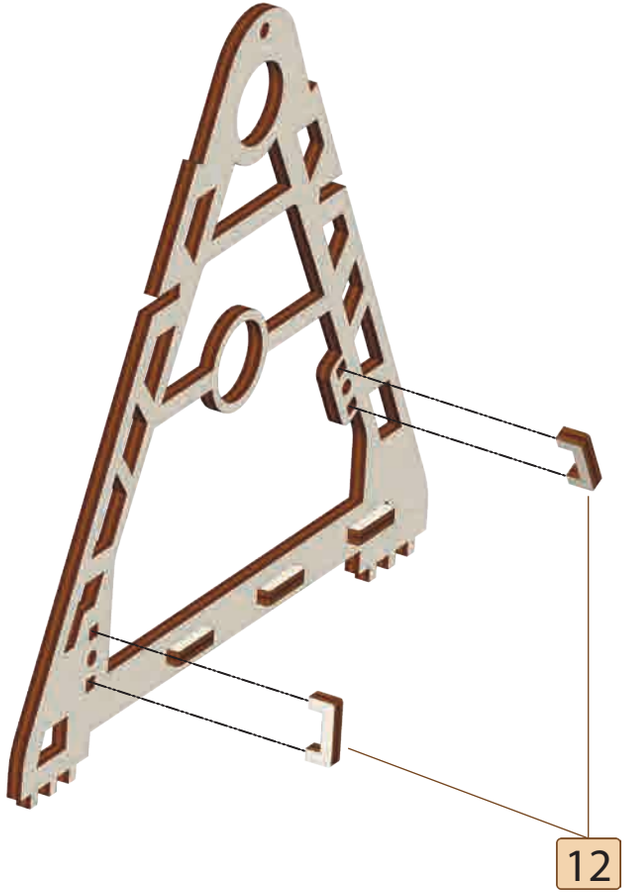

[2]

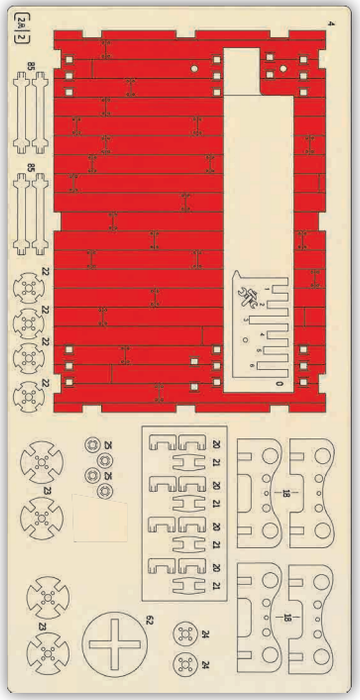

2

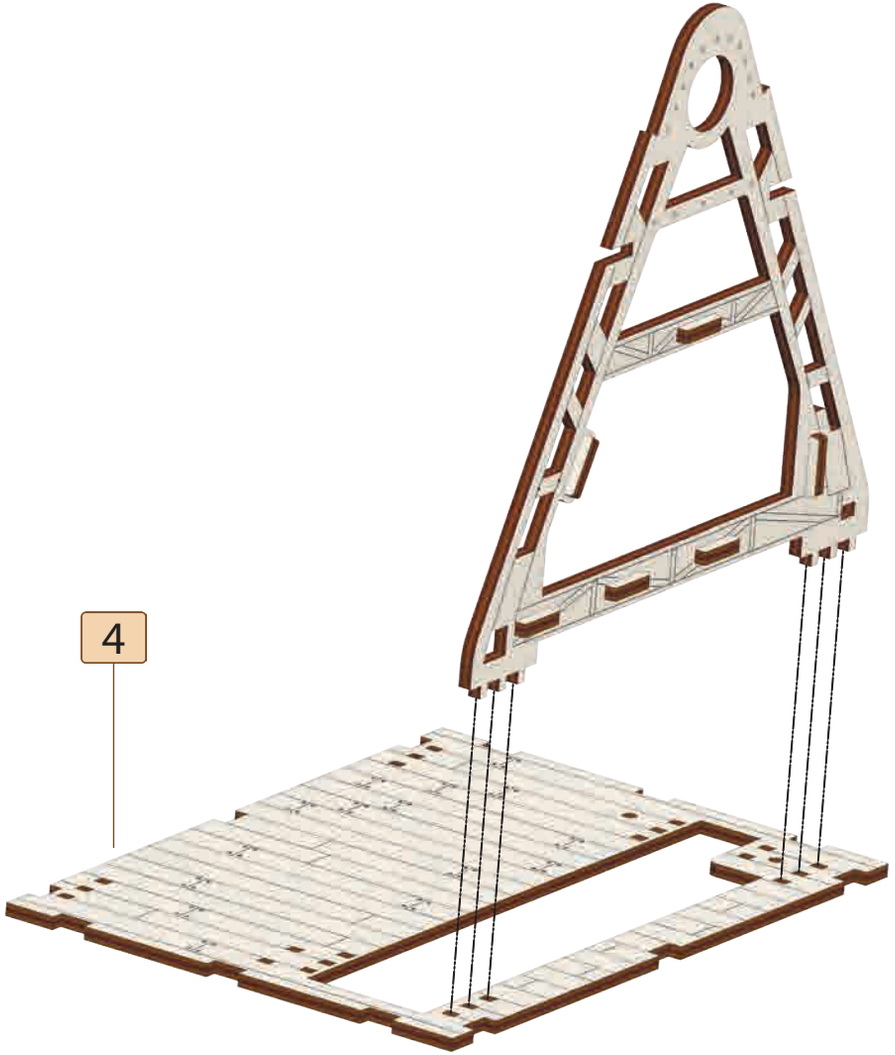

[3]

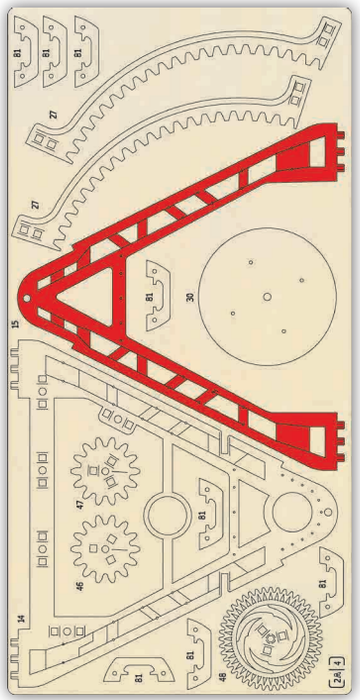

4

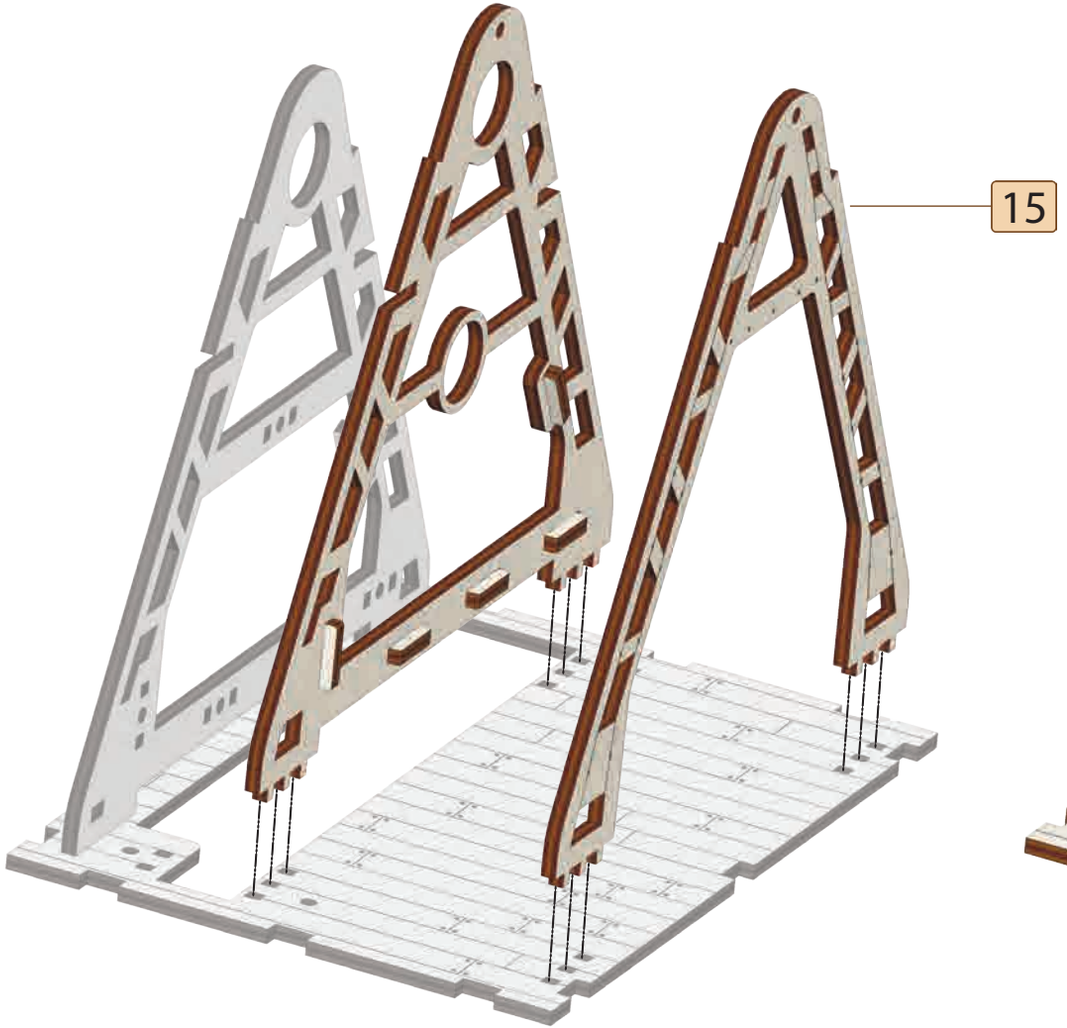

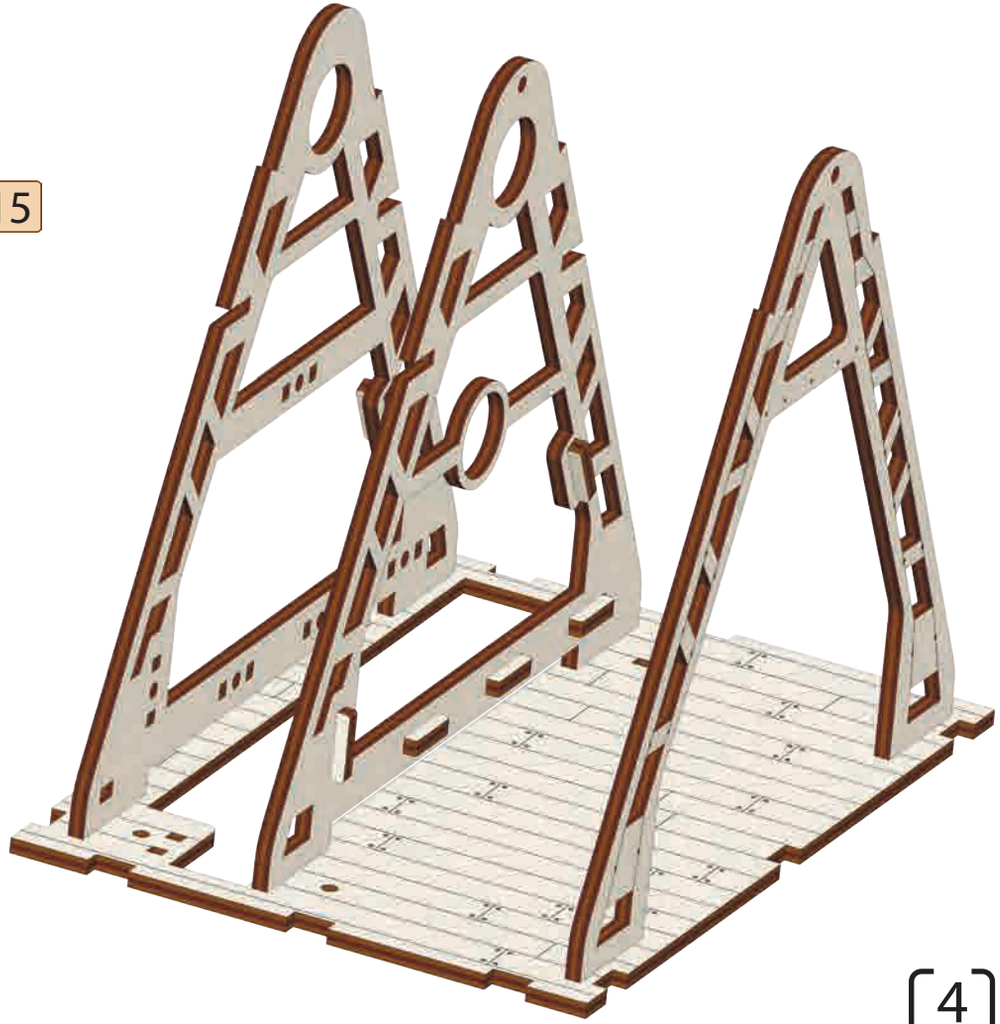

[4]

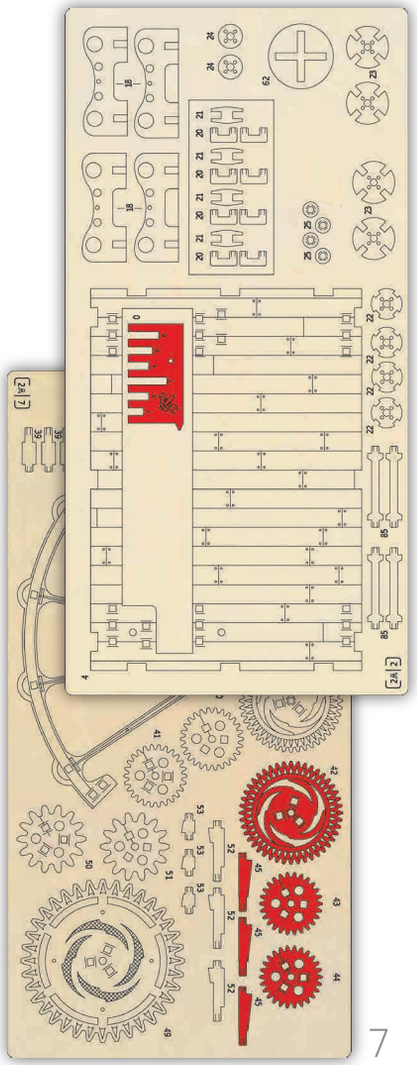
2
7

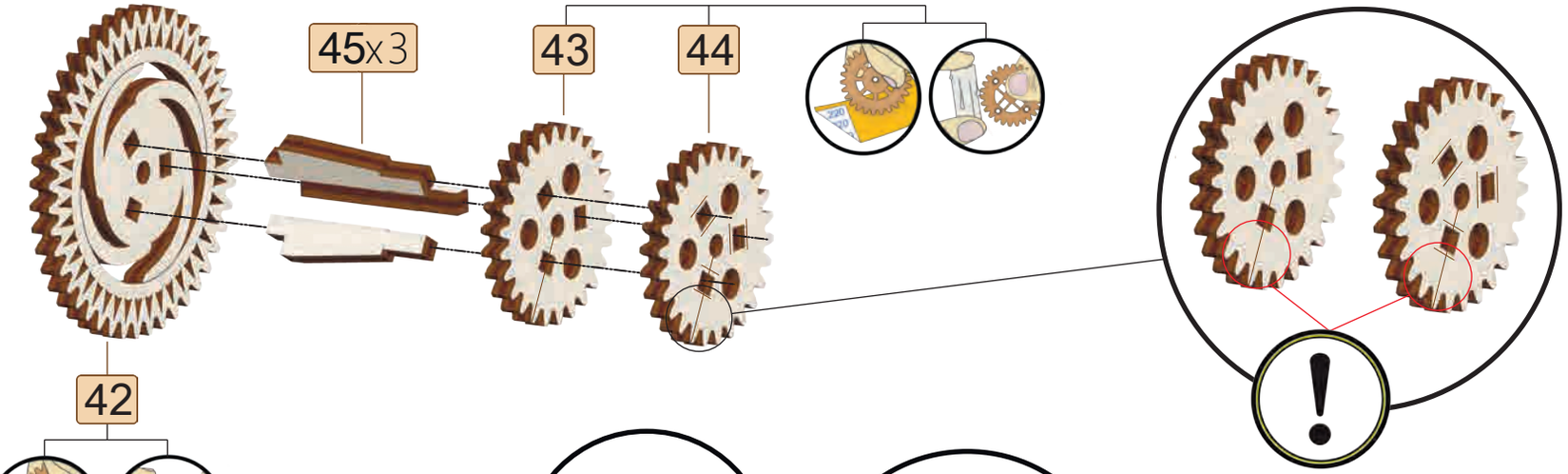
45x3
43
44
42

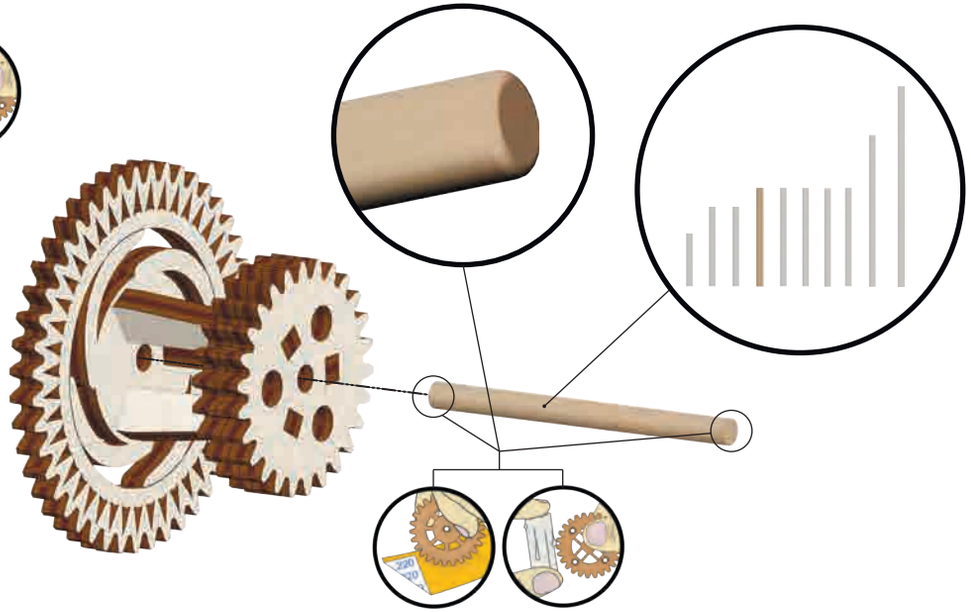

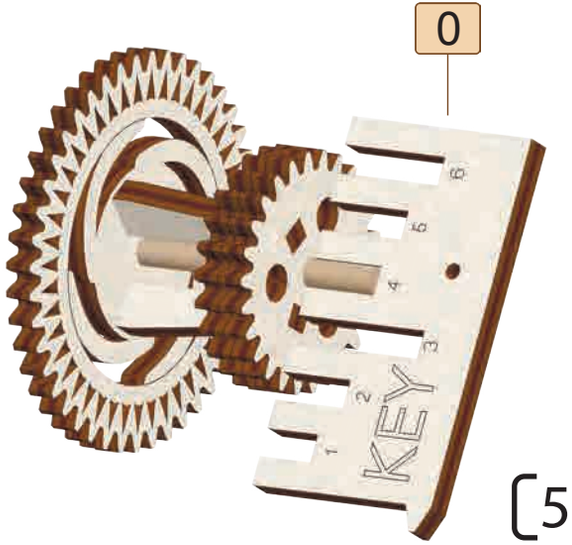
0
KEY

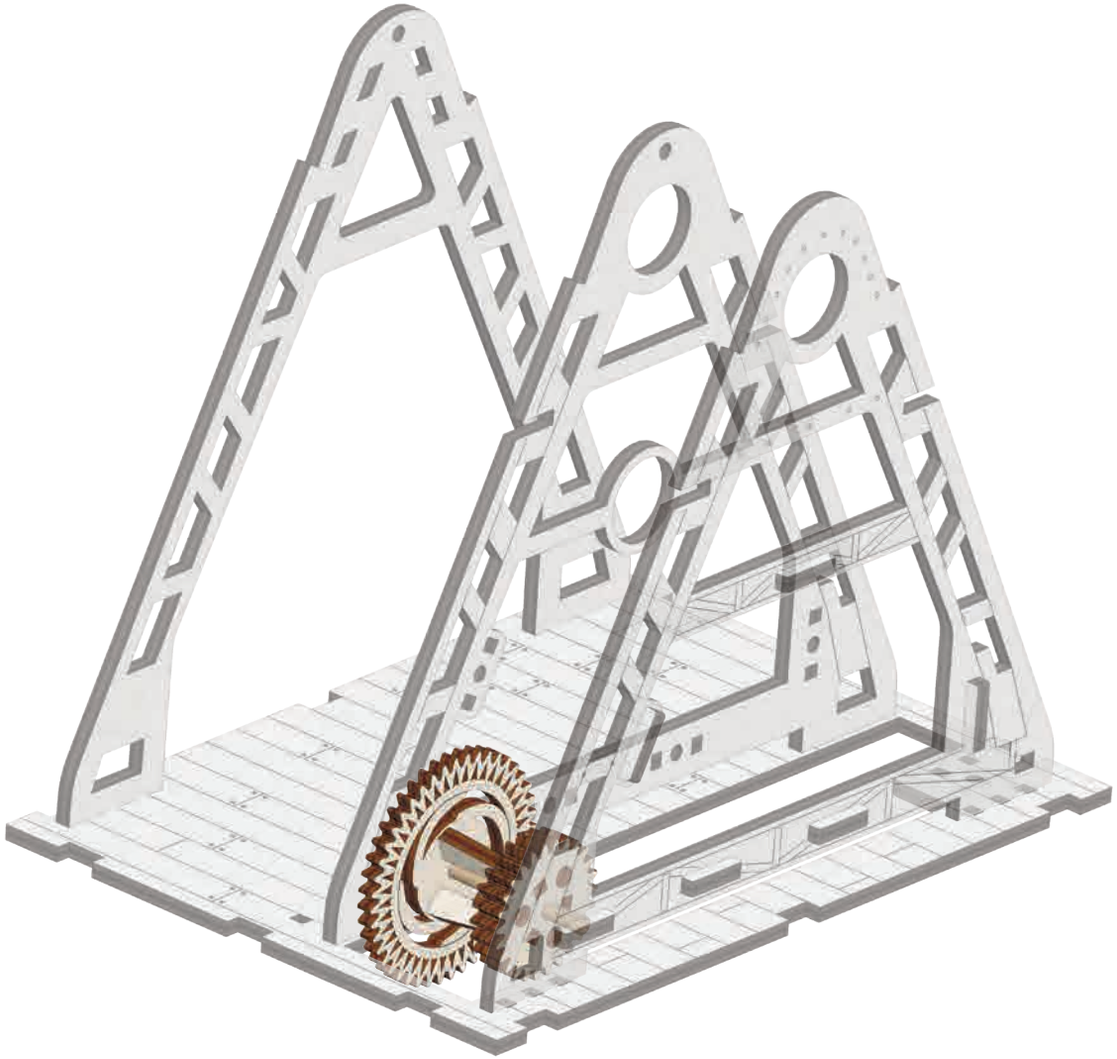

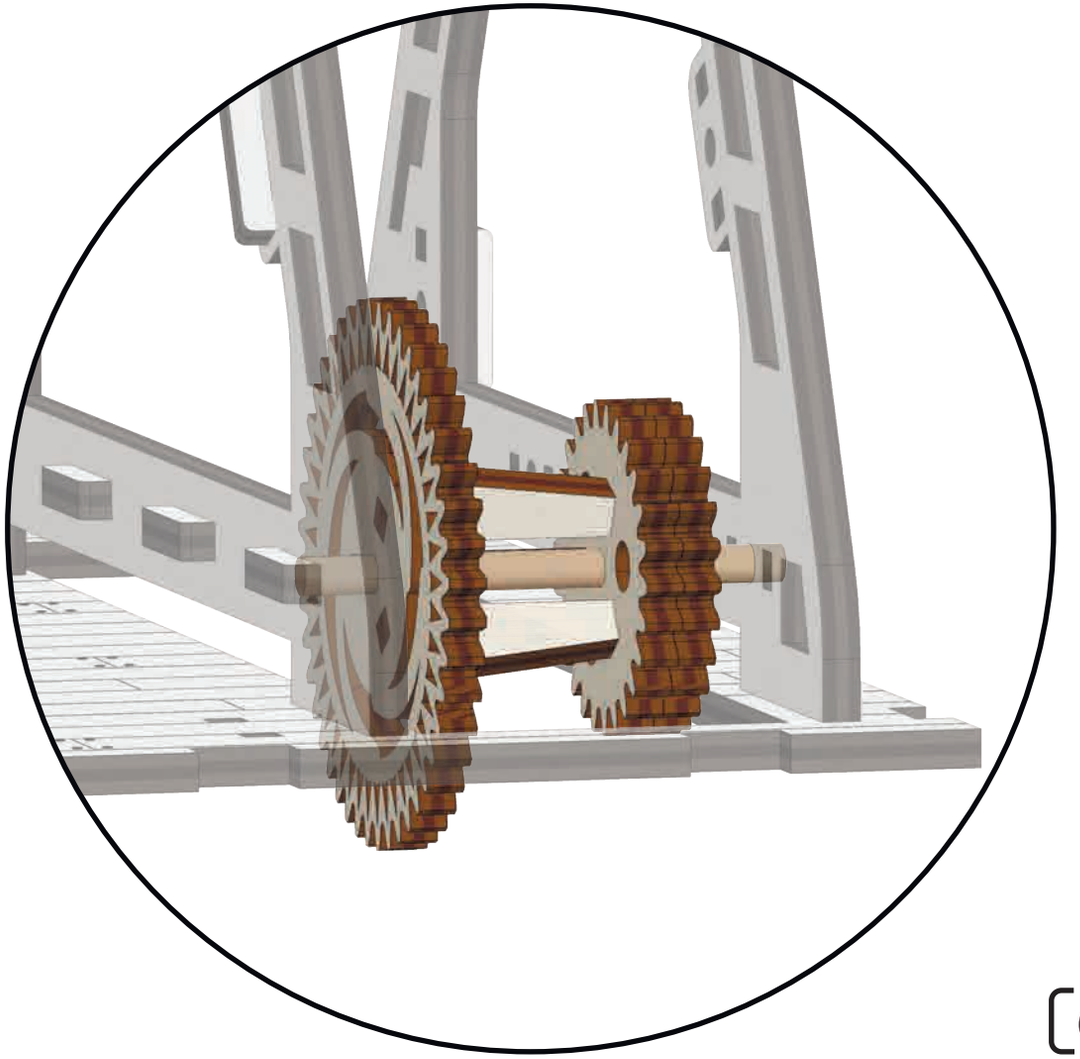

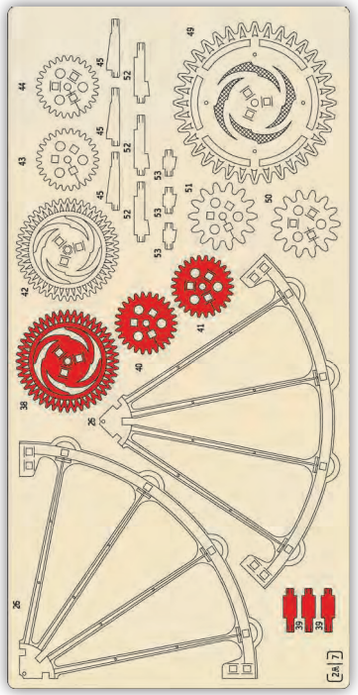

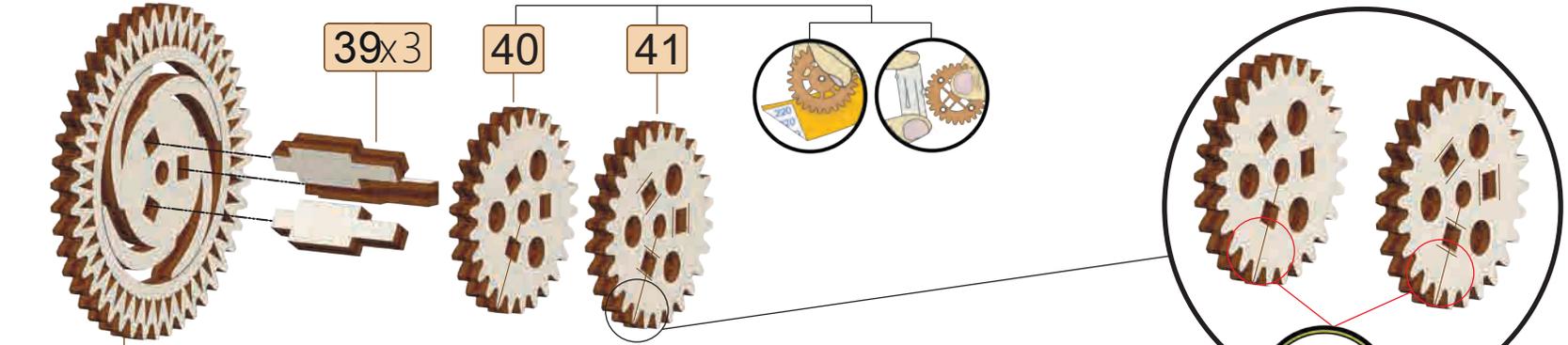
39x3
40
41
38

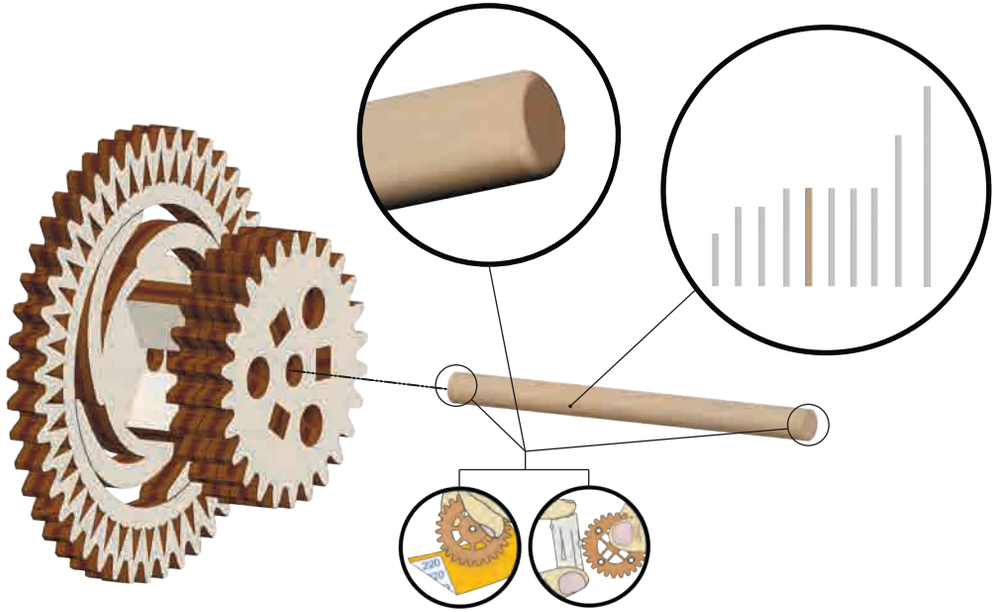

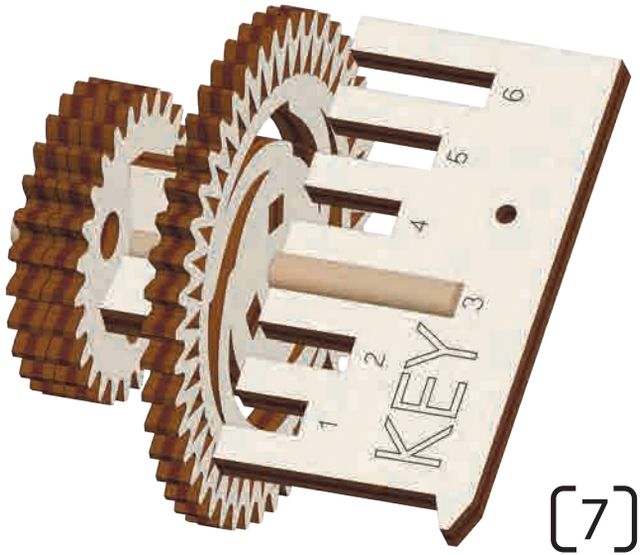
KEY
1
2
3
4
5
6

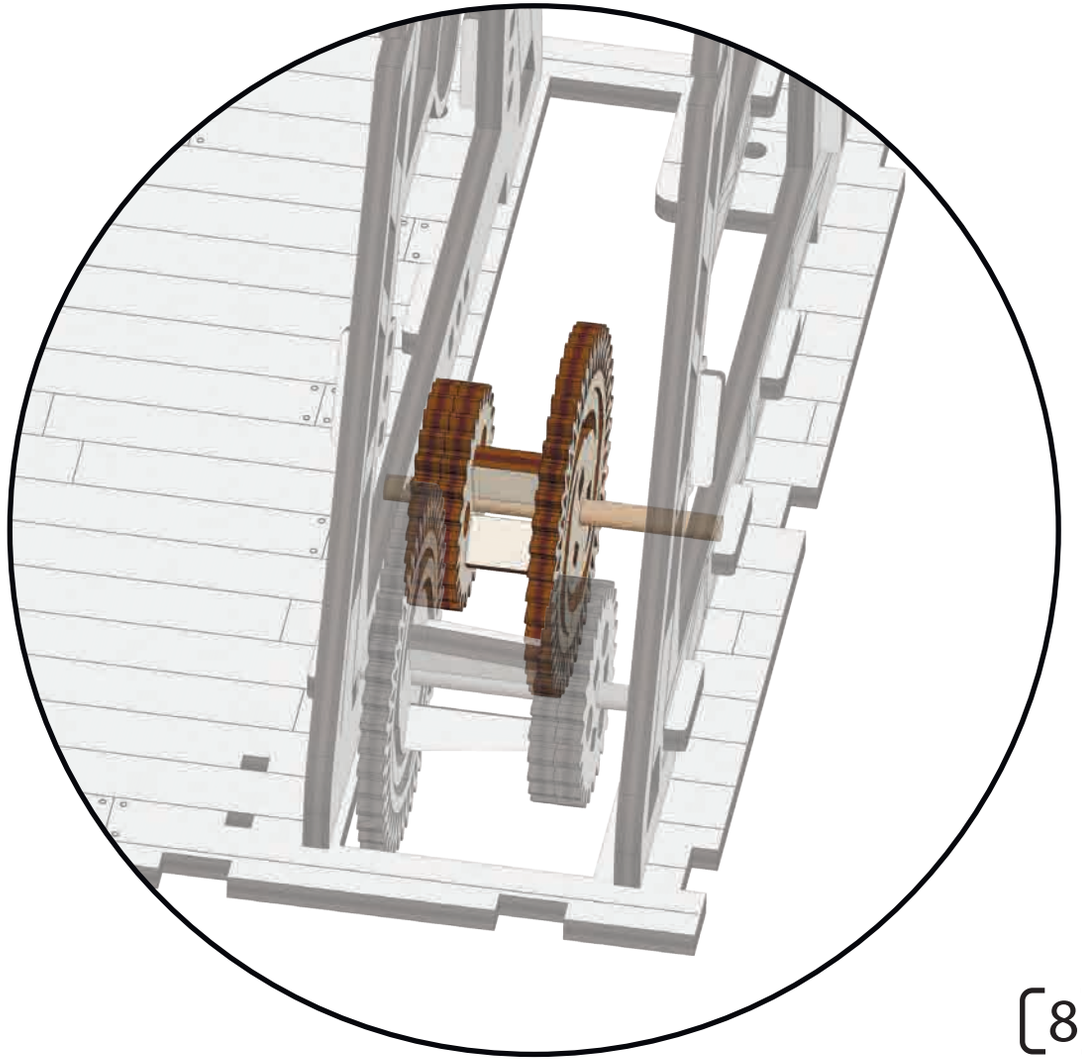

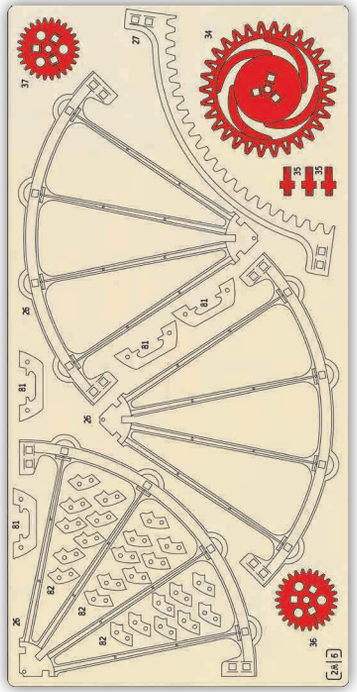

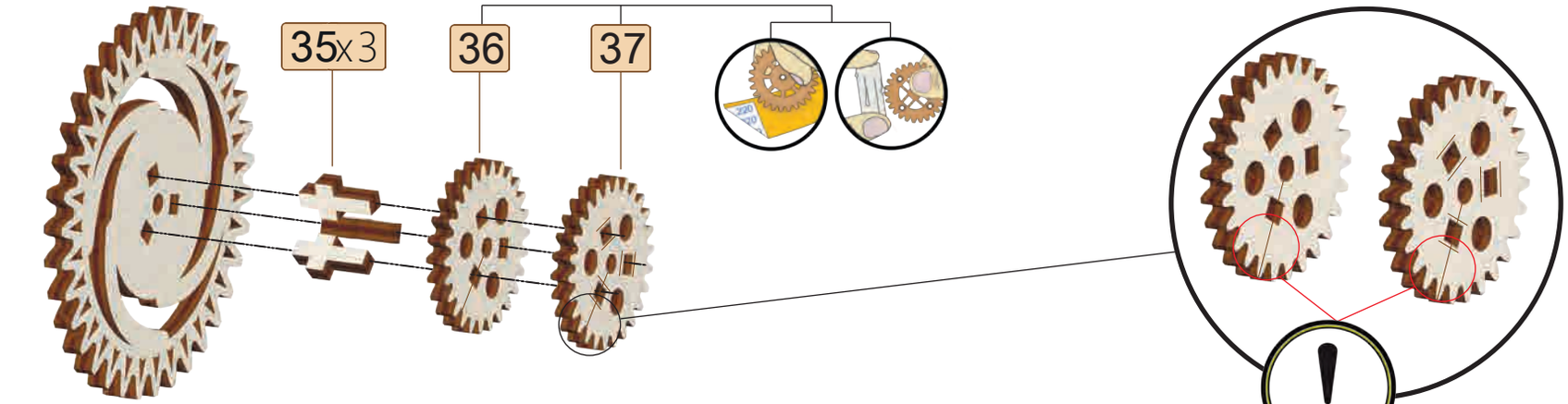
35x3
36
37

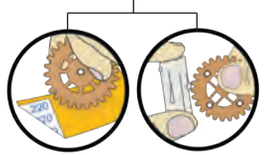
34

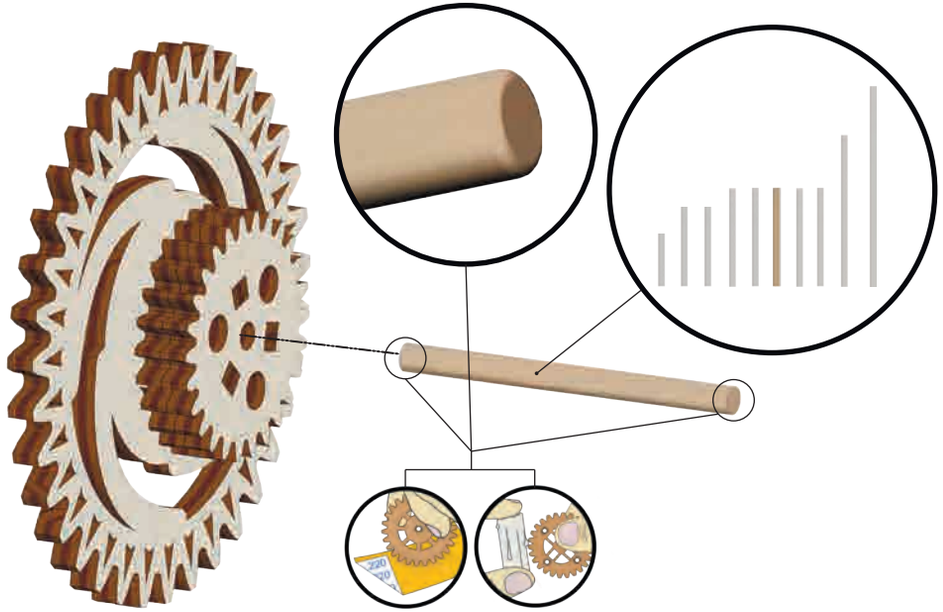

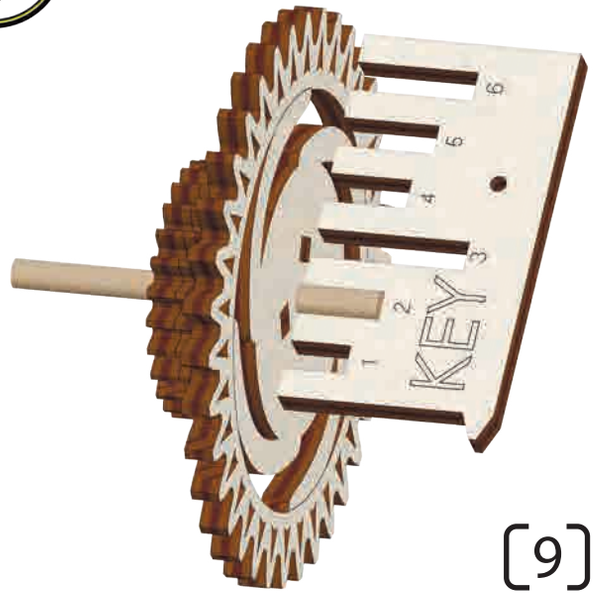
KEY

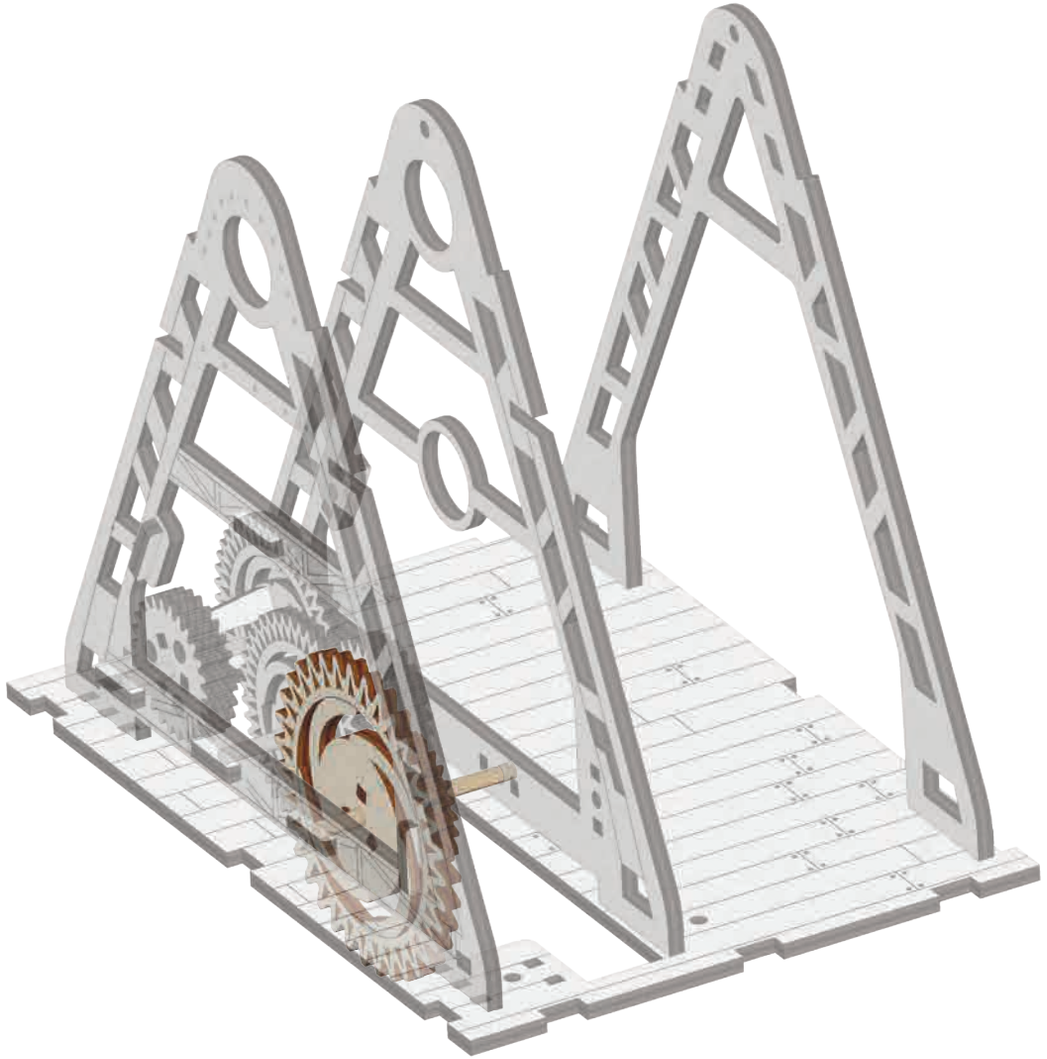

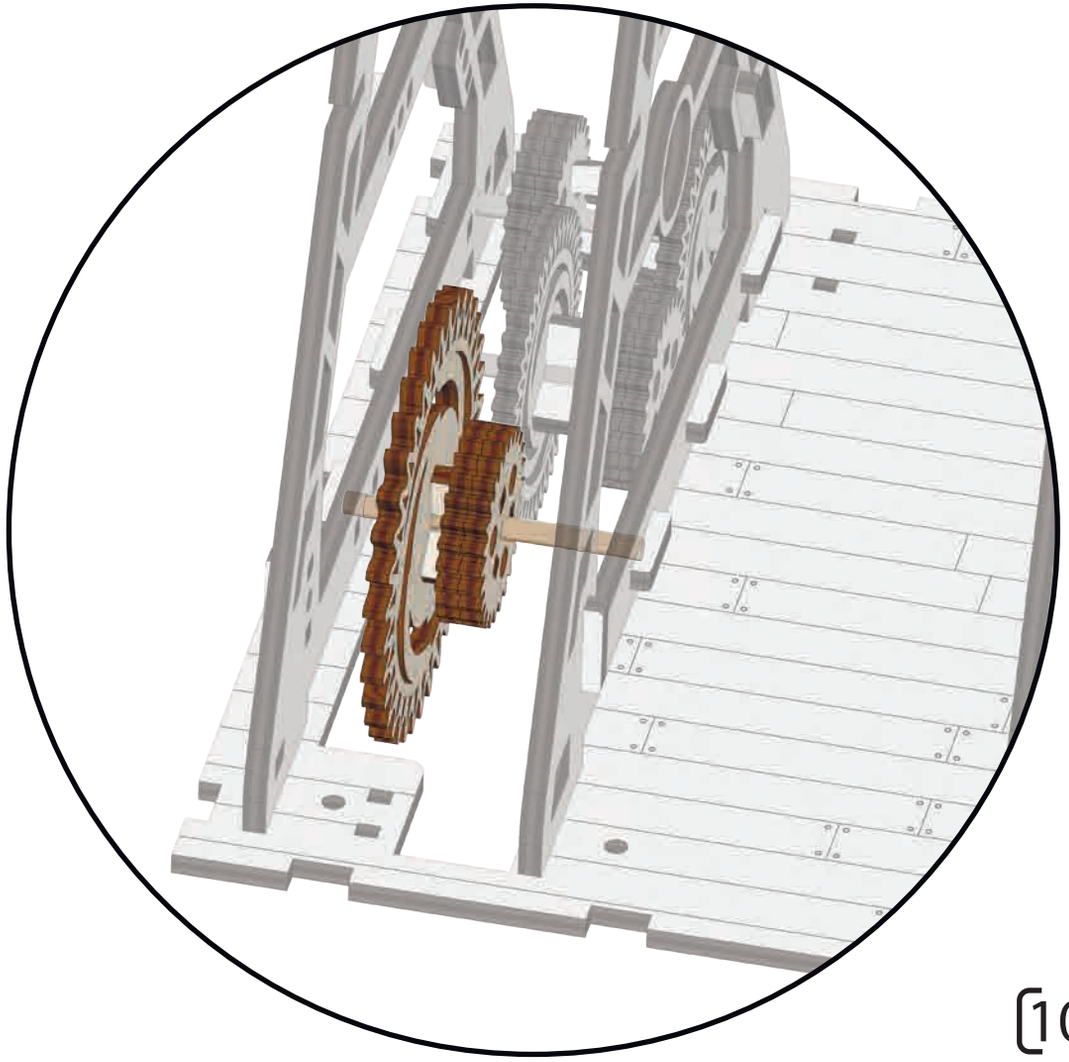

29
30
28
31x3
32
33
KEY
3
4
5

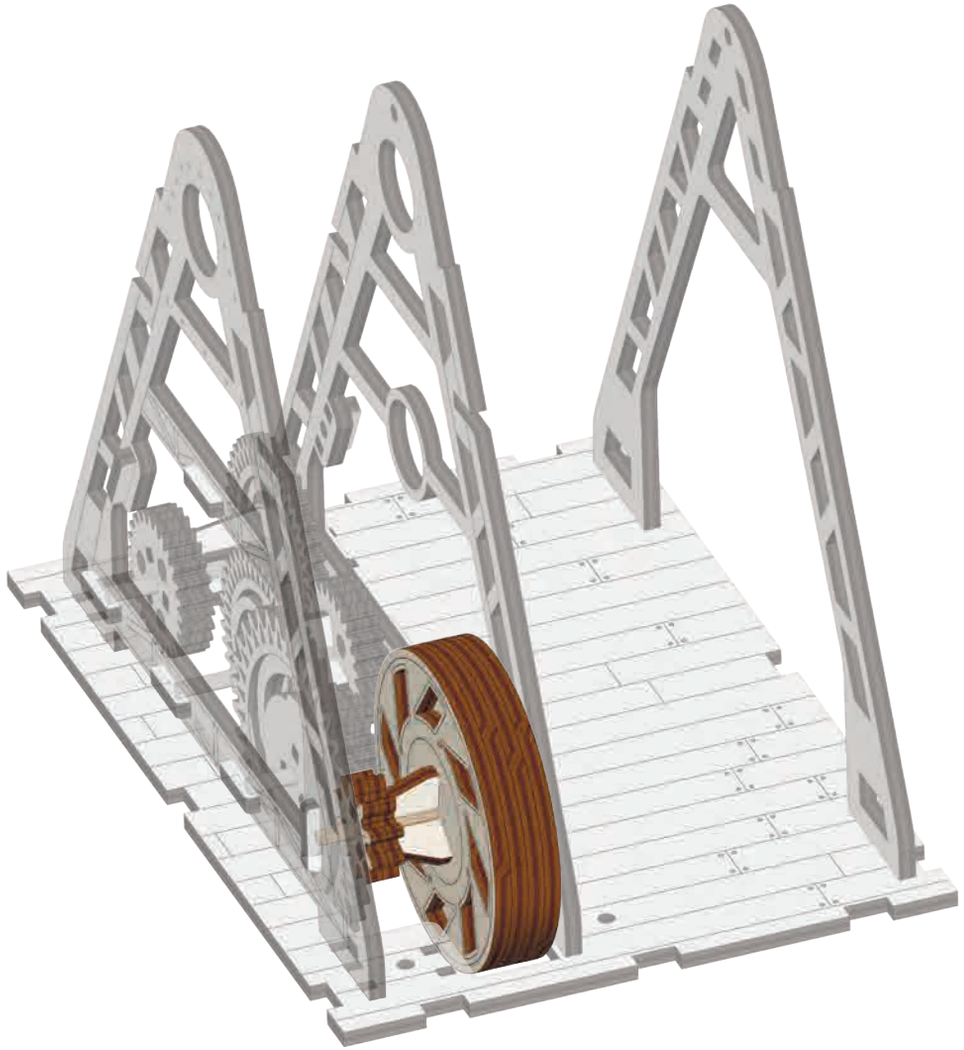

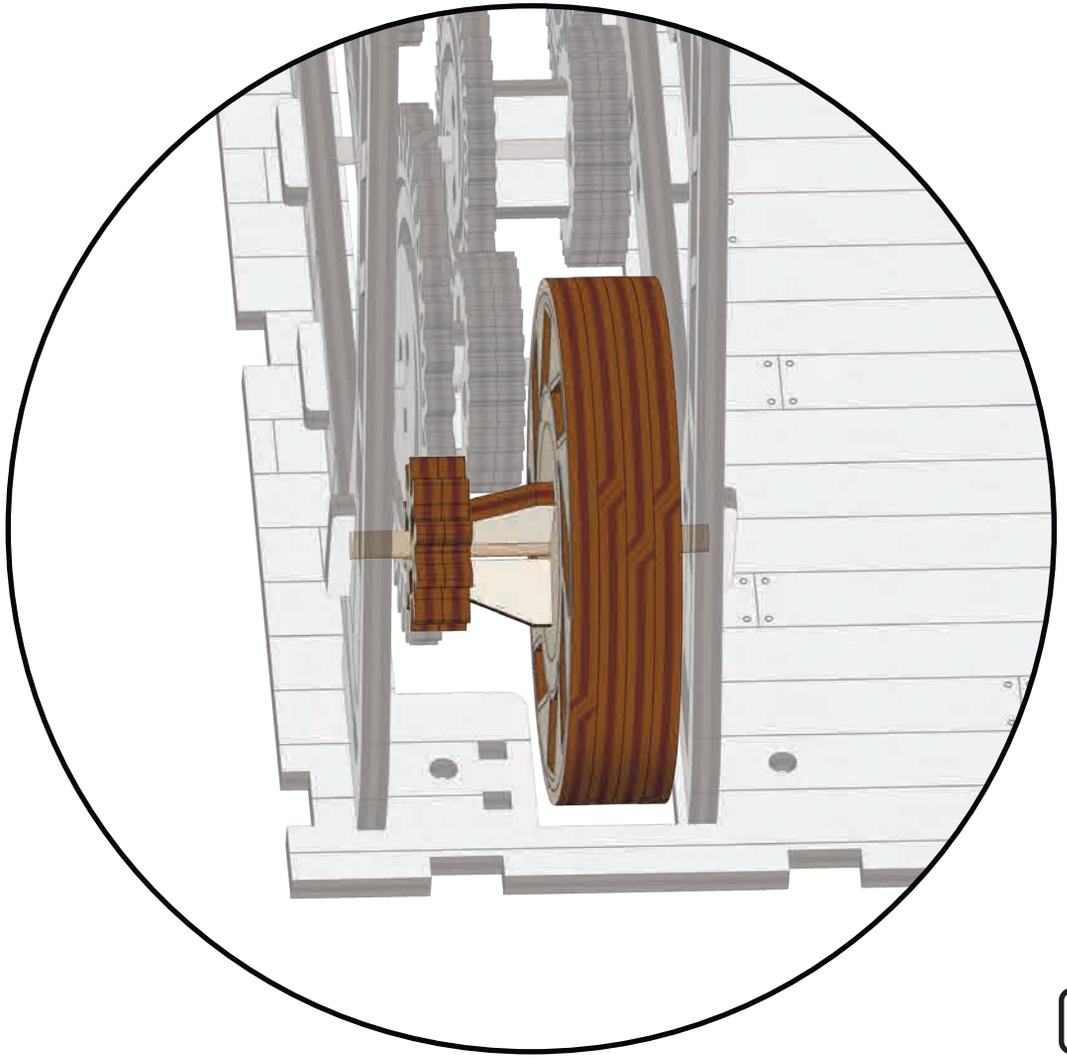

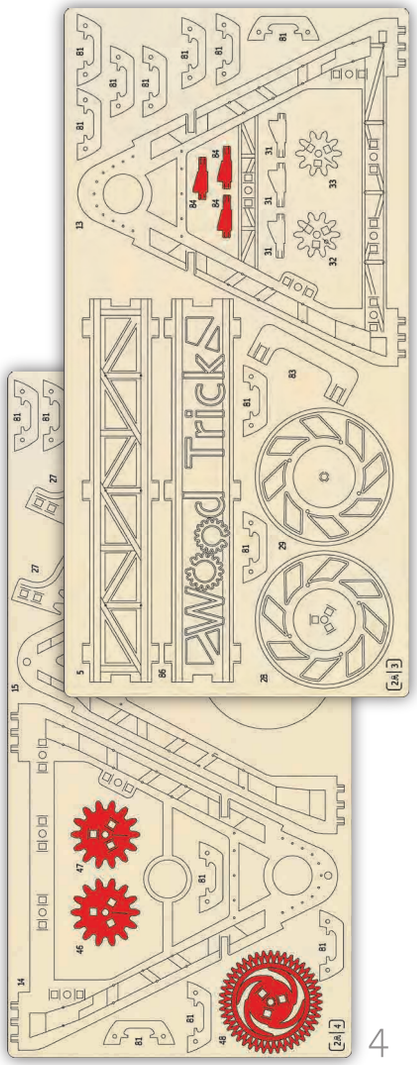
Wood Tricks
3
4

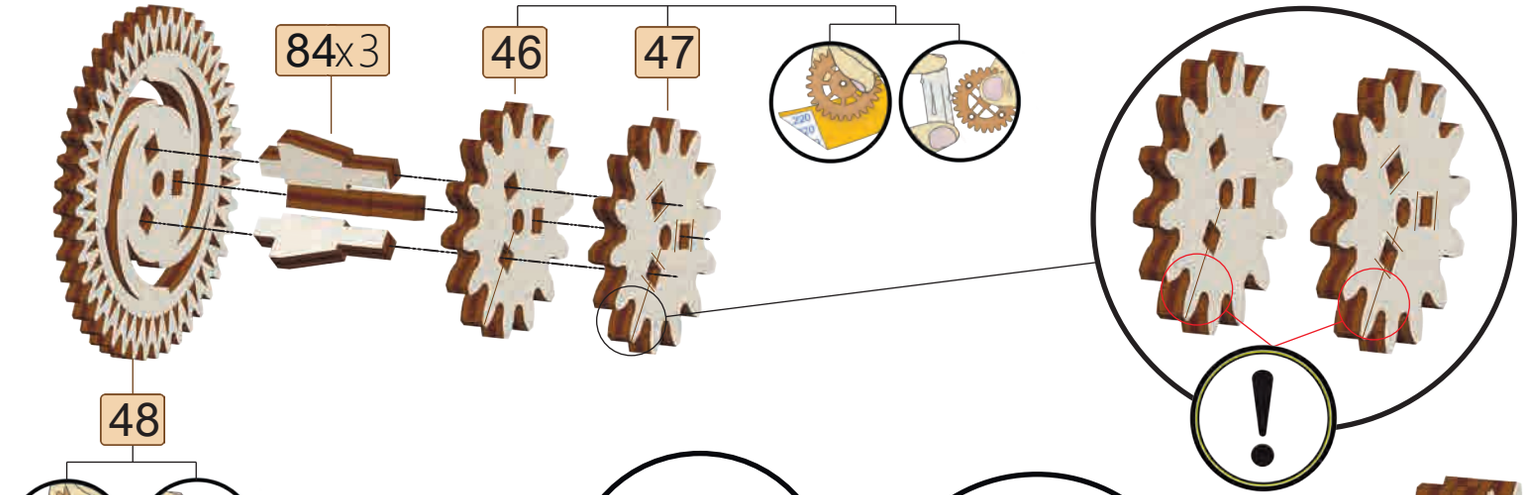
84x3
46
47
48
!

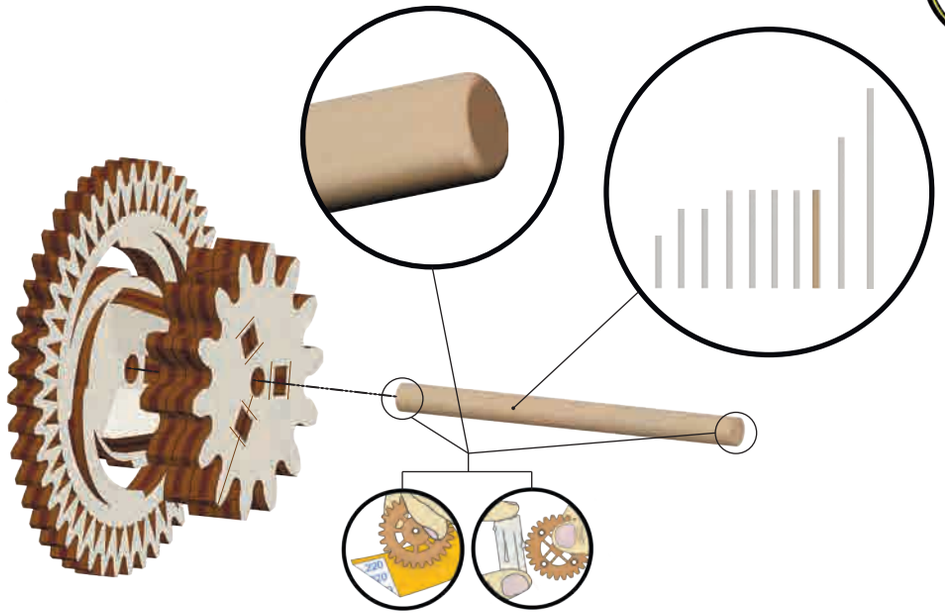

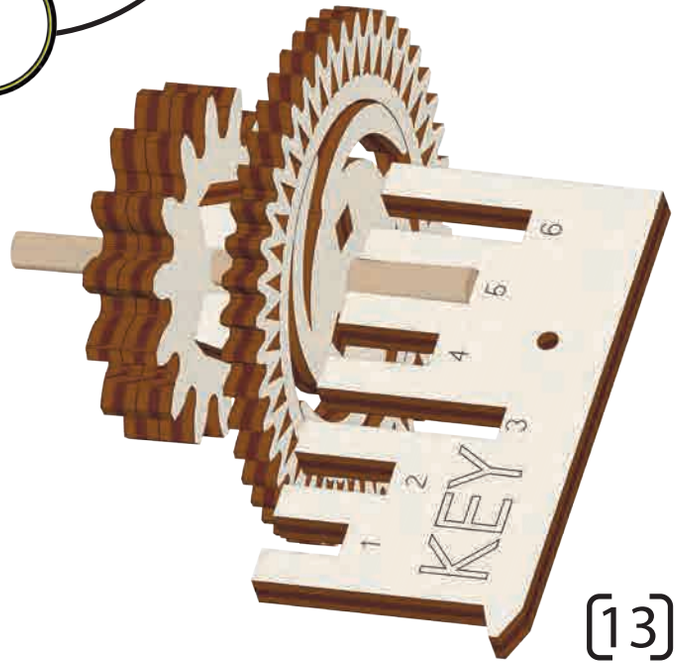
KEY

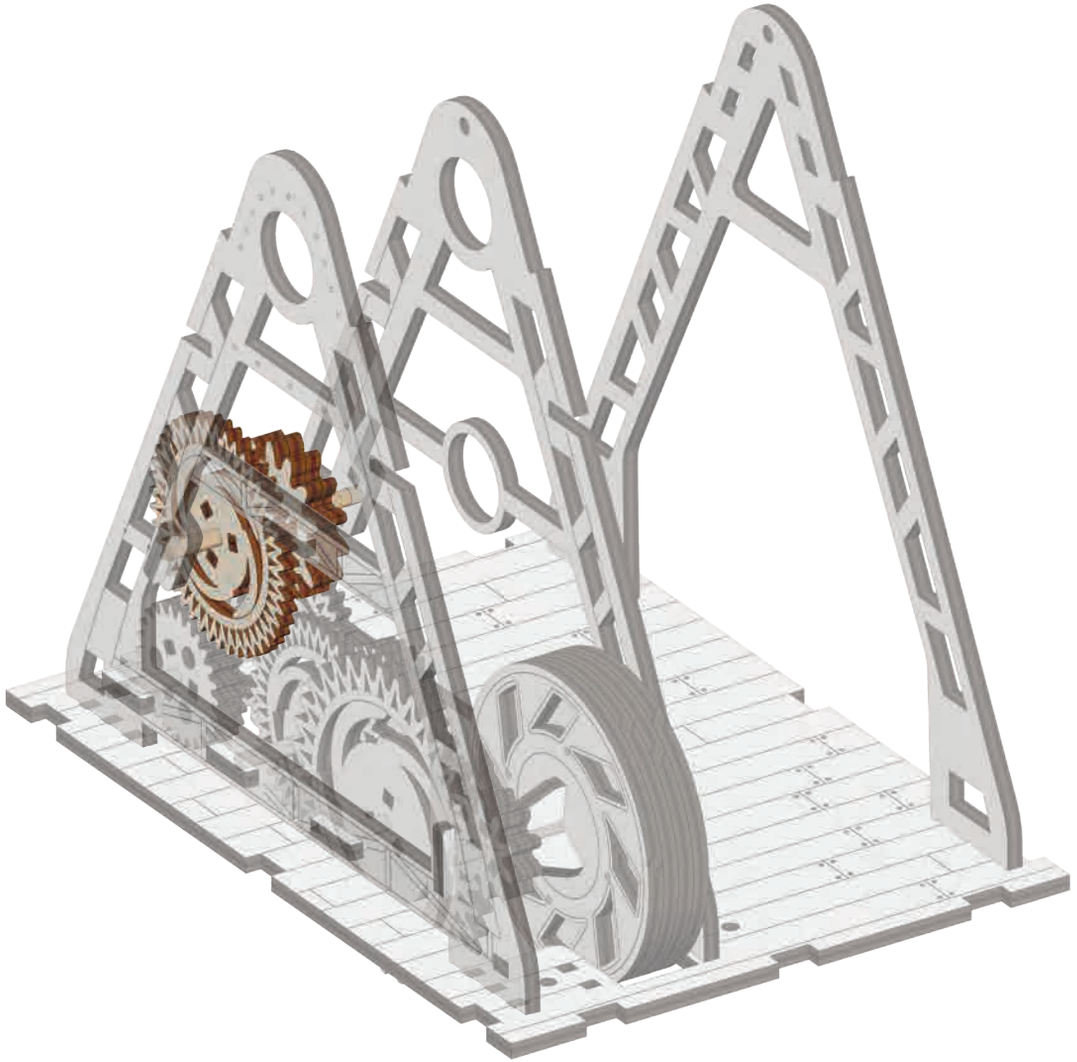

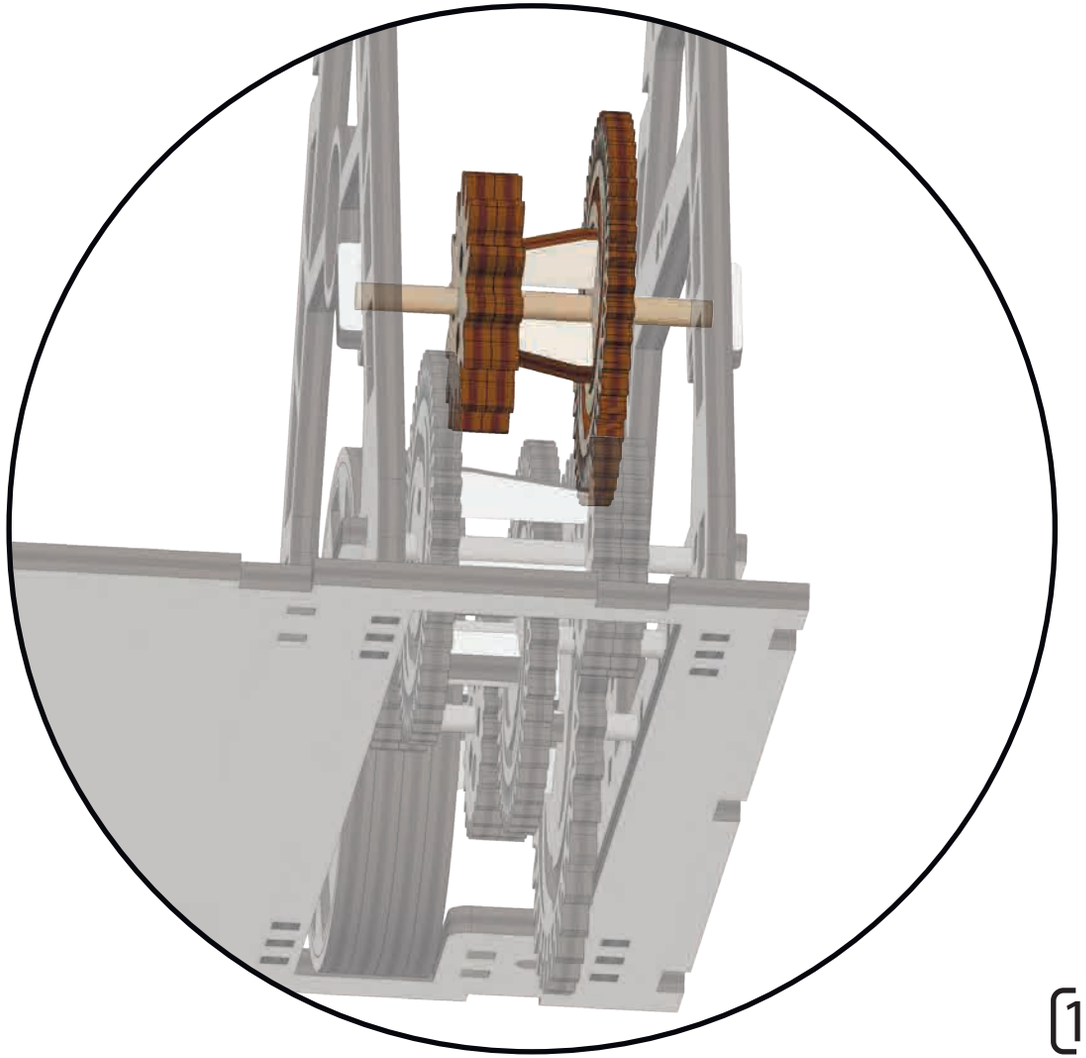

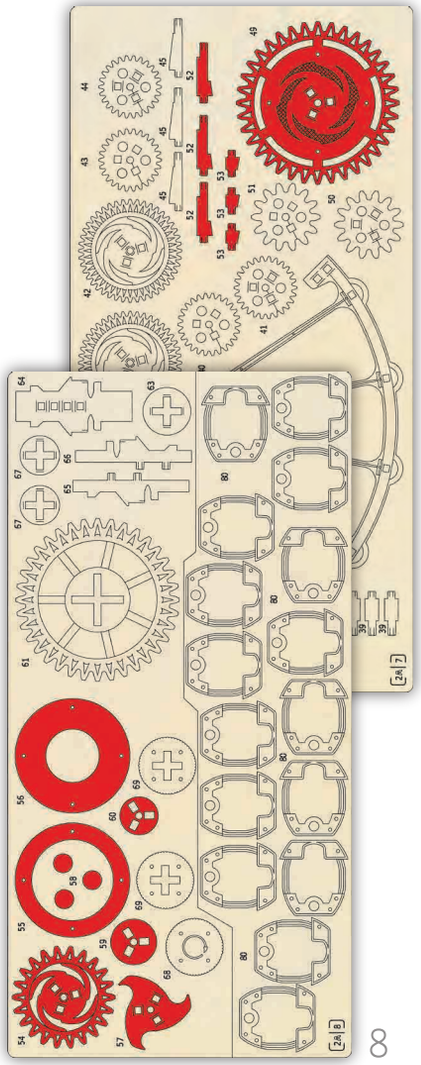
7
8

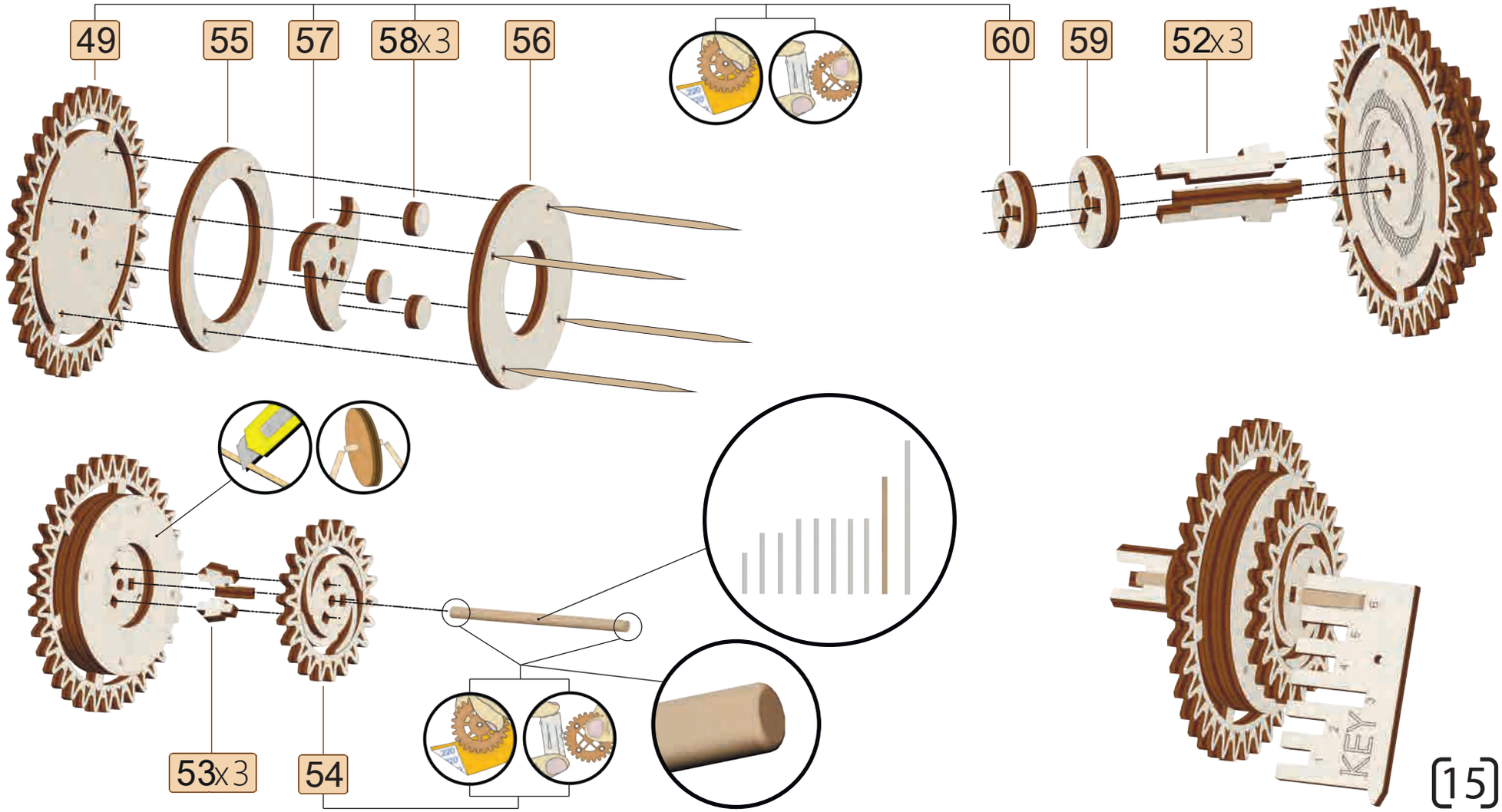
49
55
57
58x3
56
60
59
52x3
53x3
54

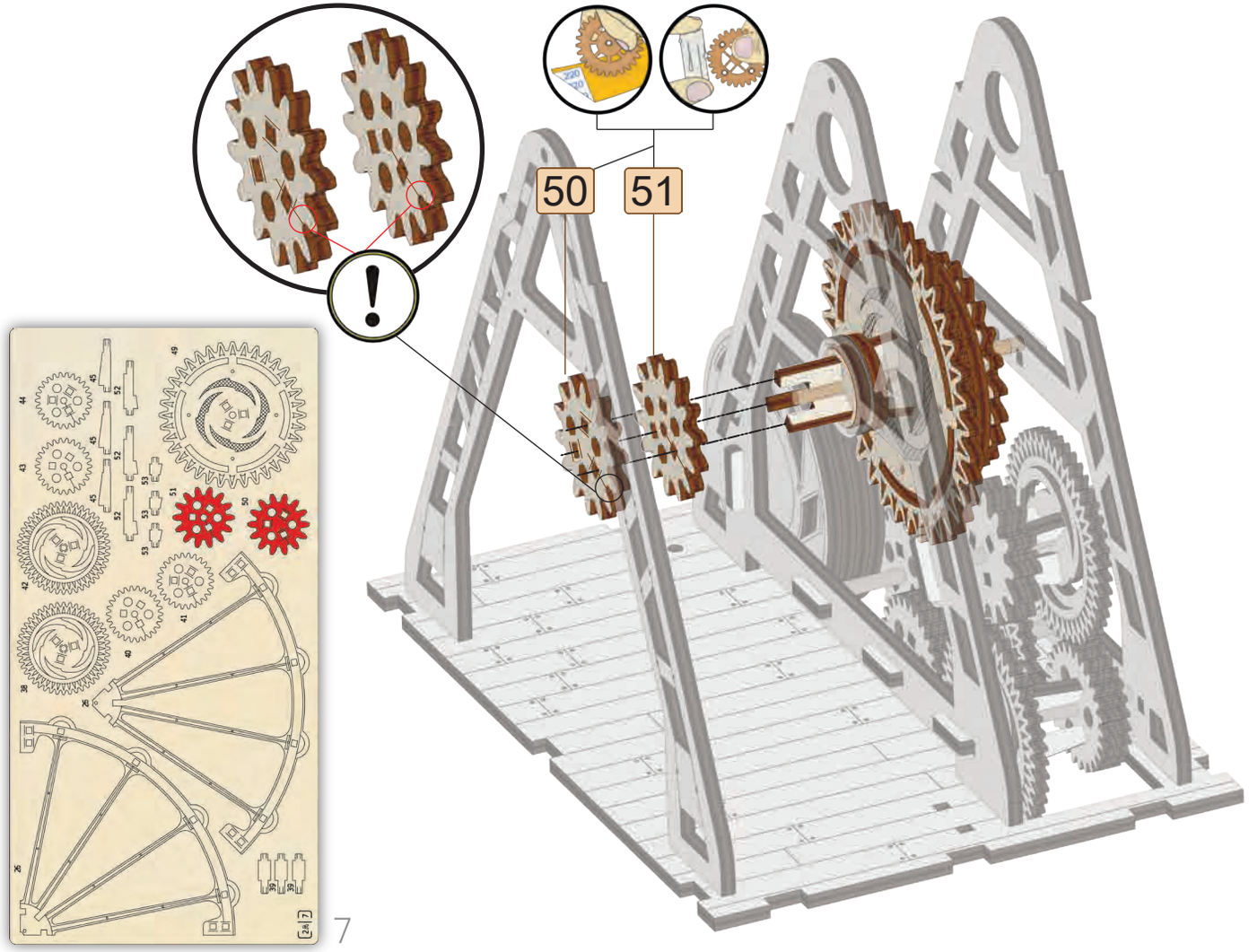
50
51
!

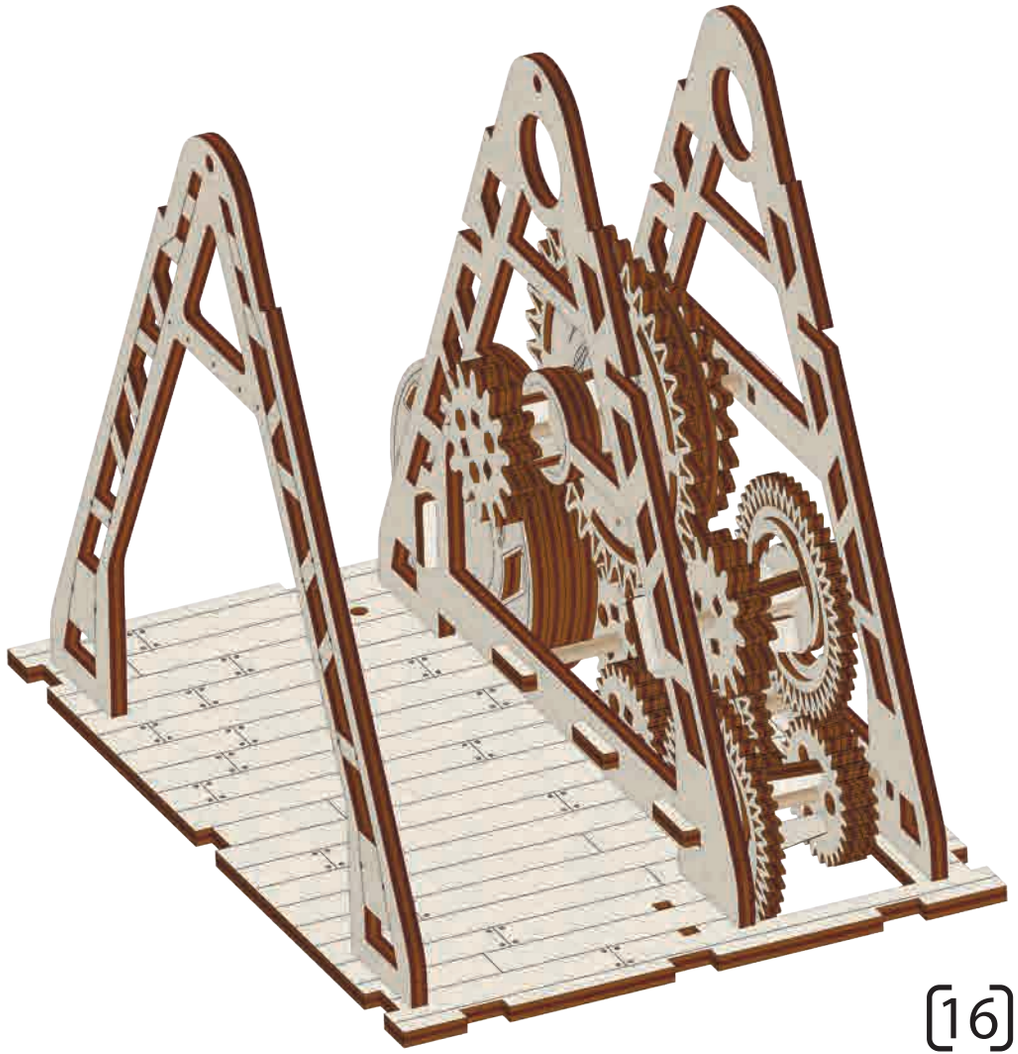

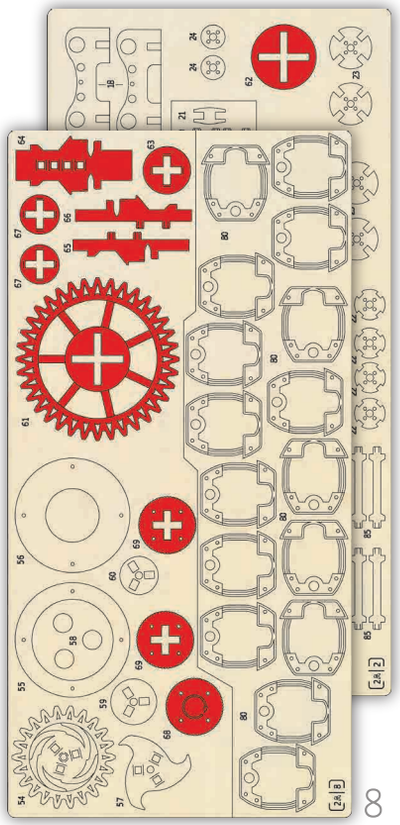
2
8

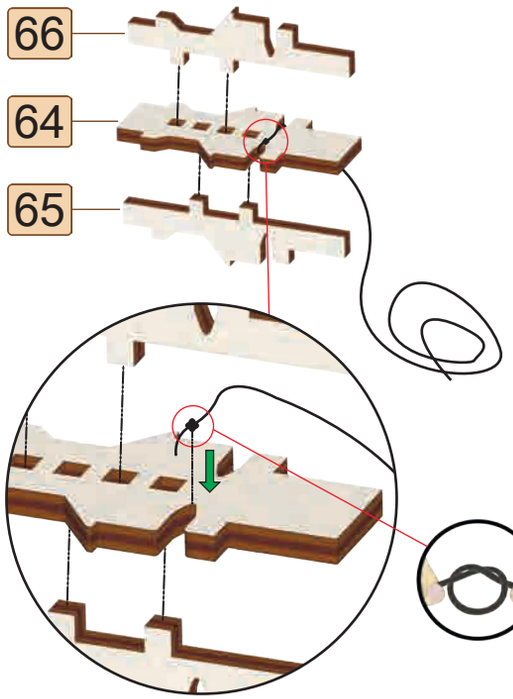
66
64
65

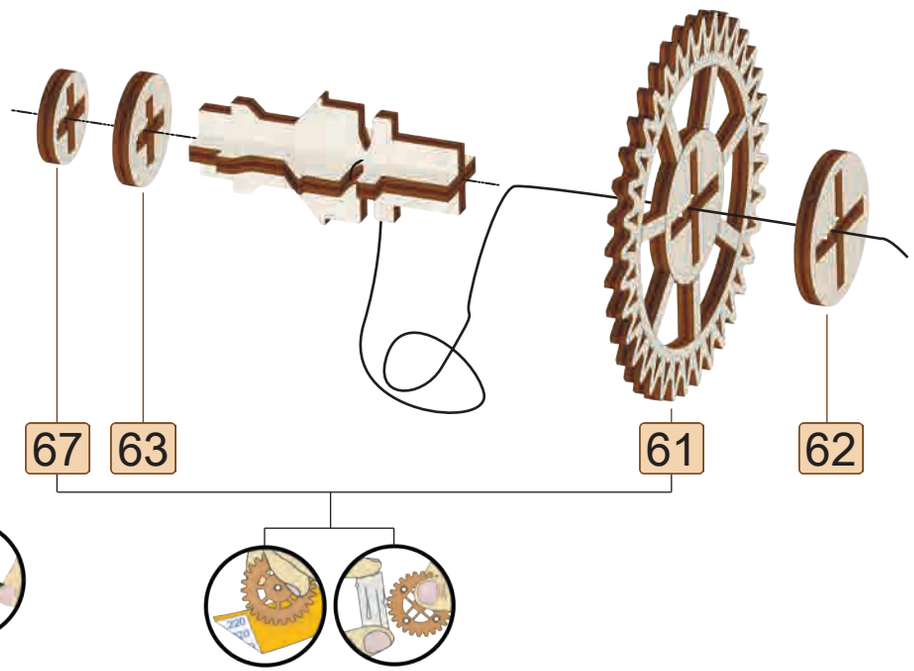
67
63
61
62

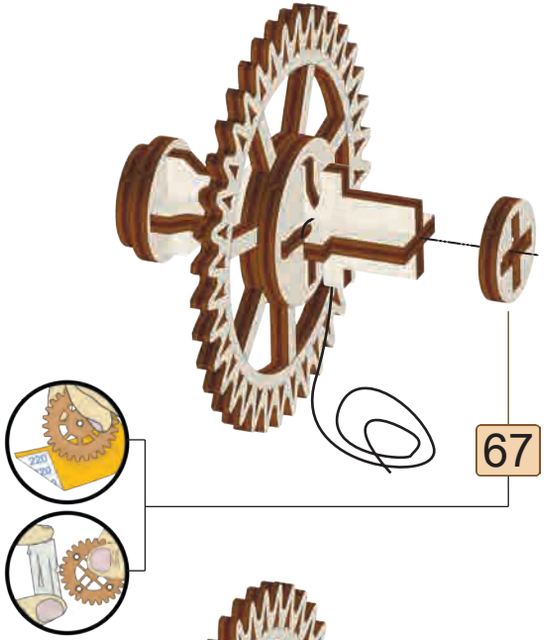
67

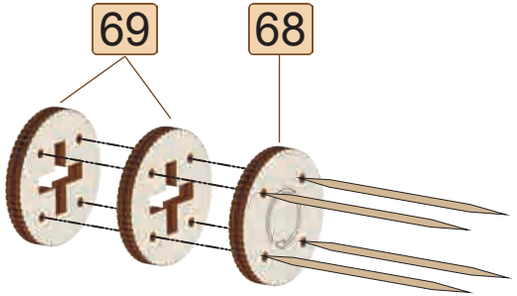
69
68

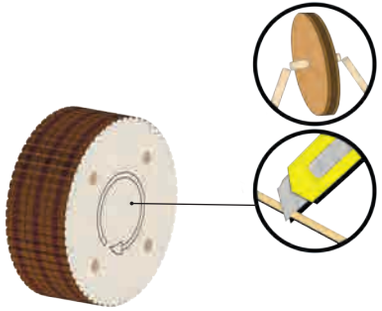

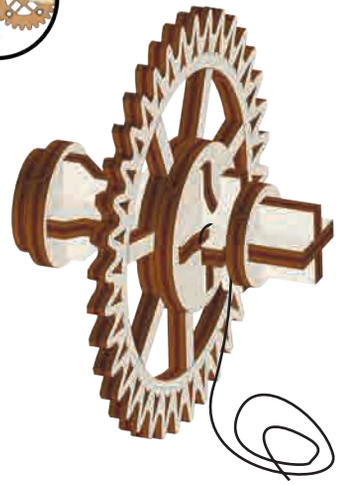

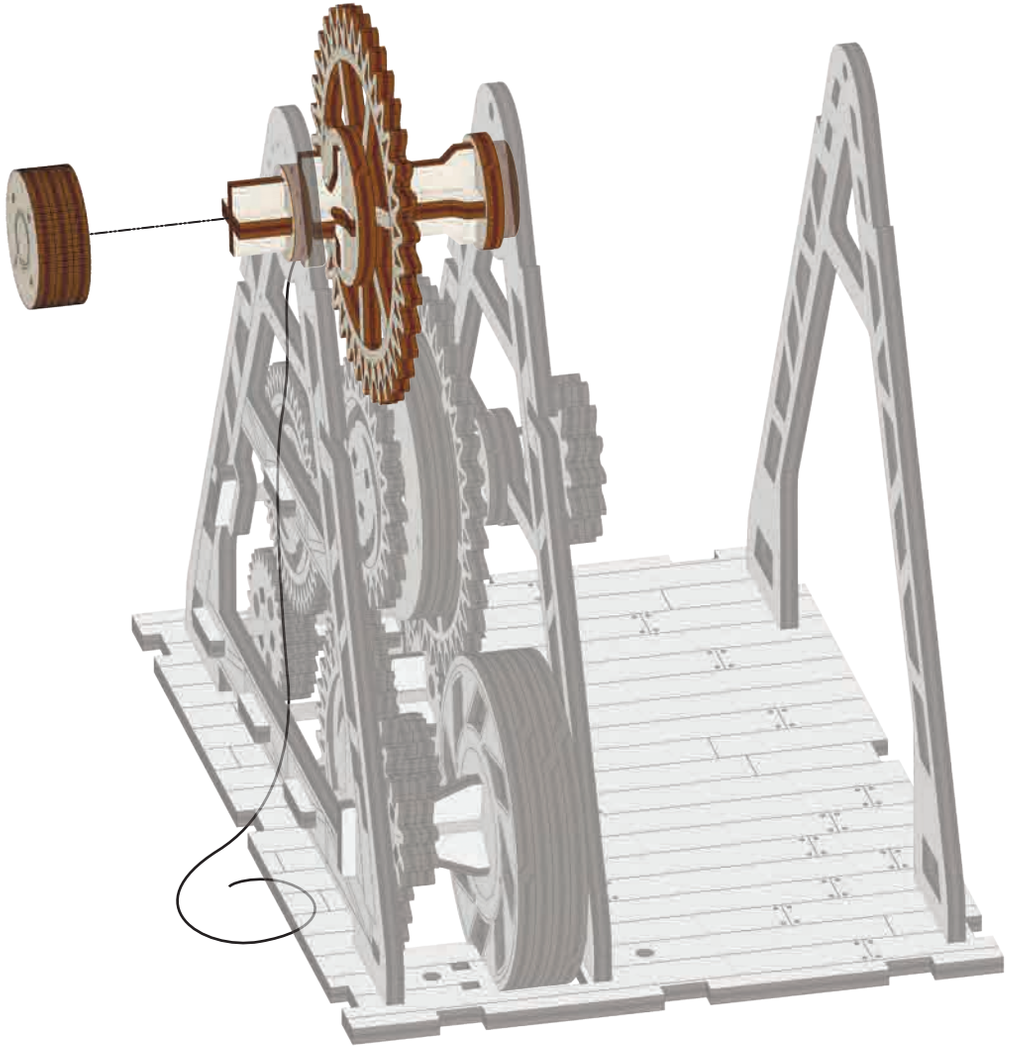

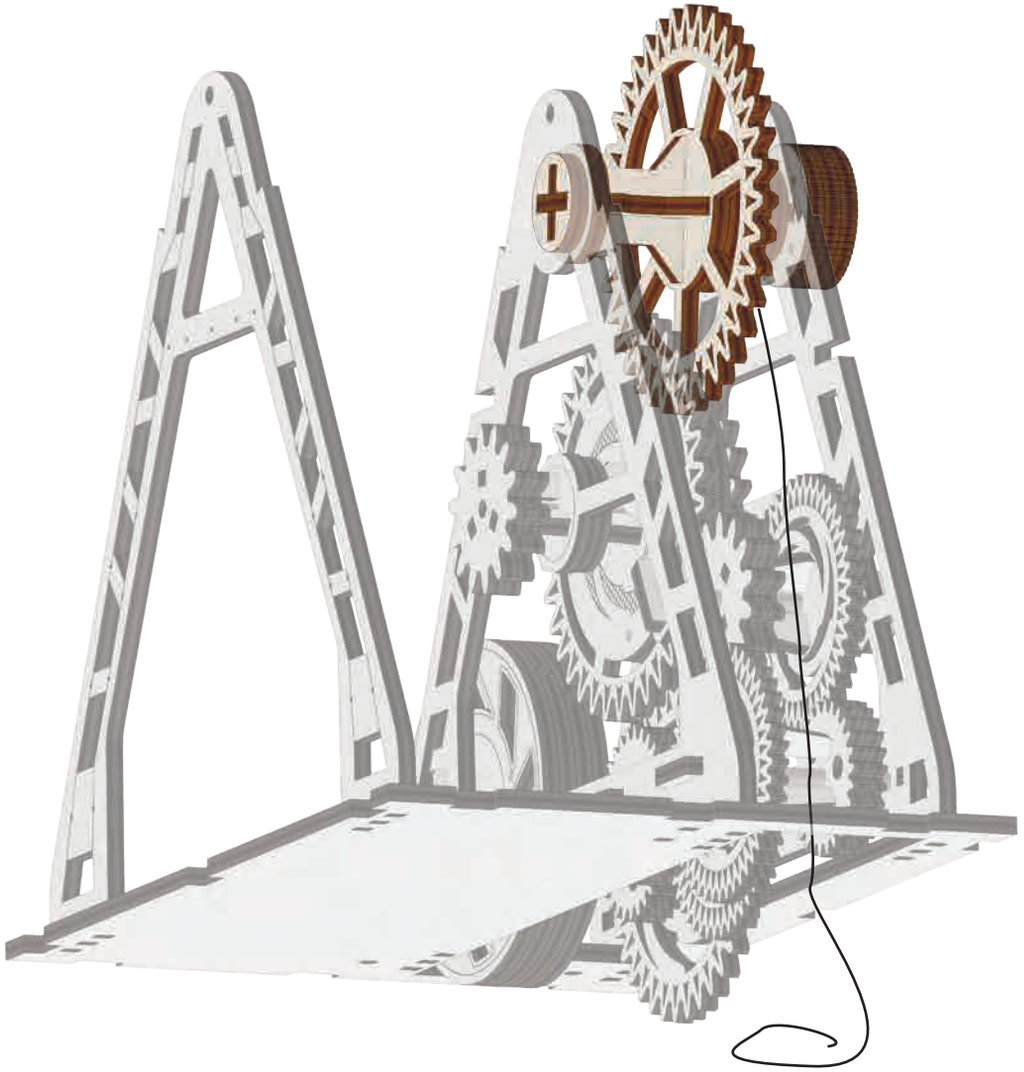

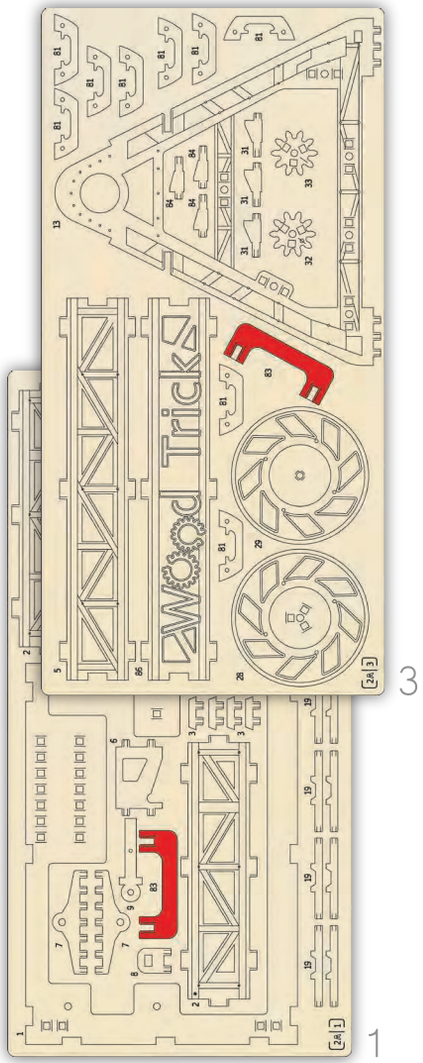
Wood Tricks
3
1

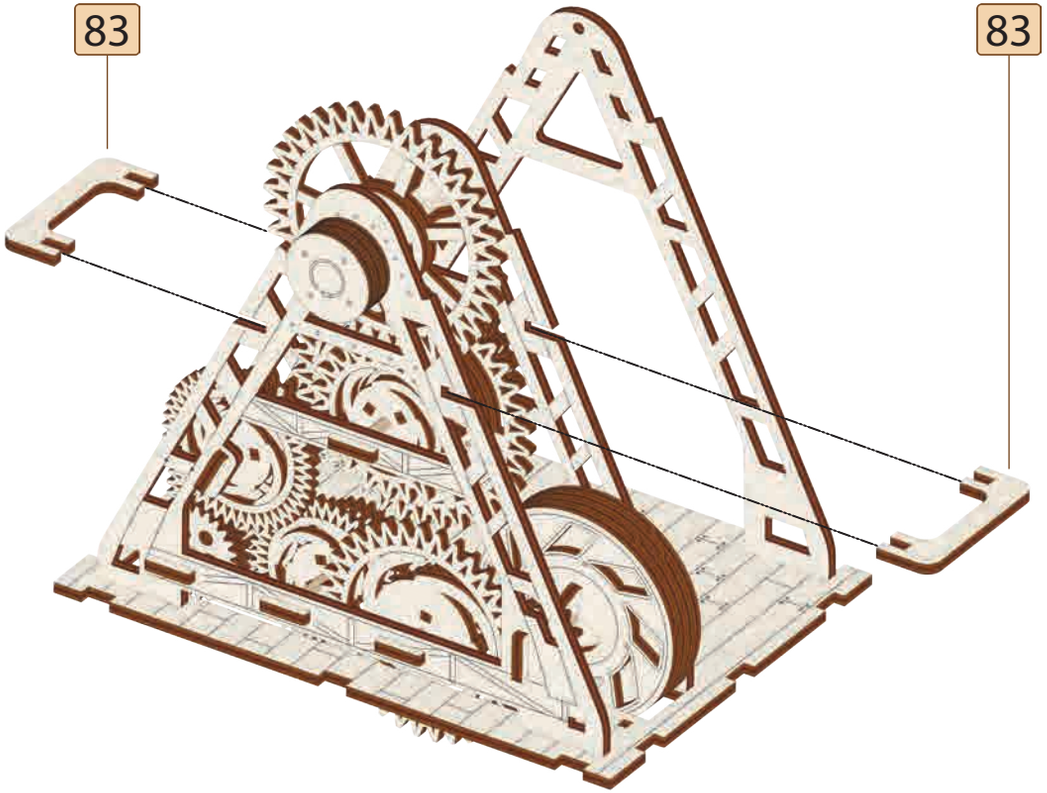
83
83

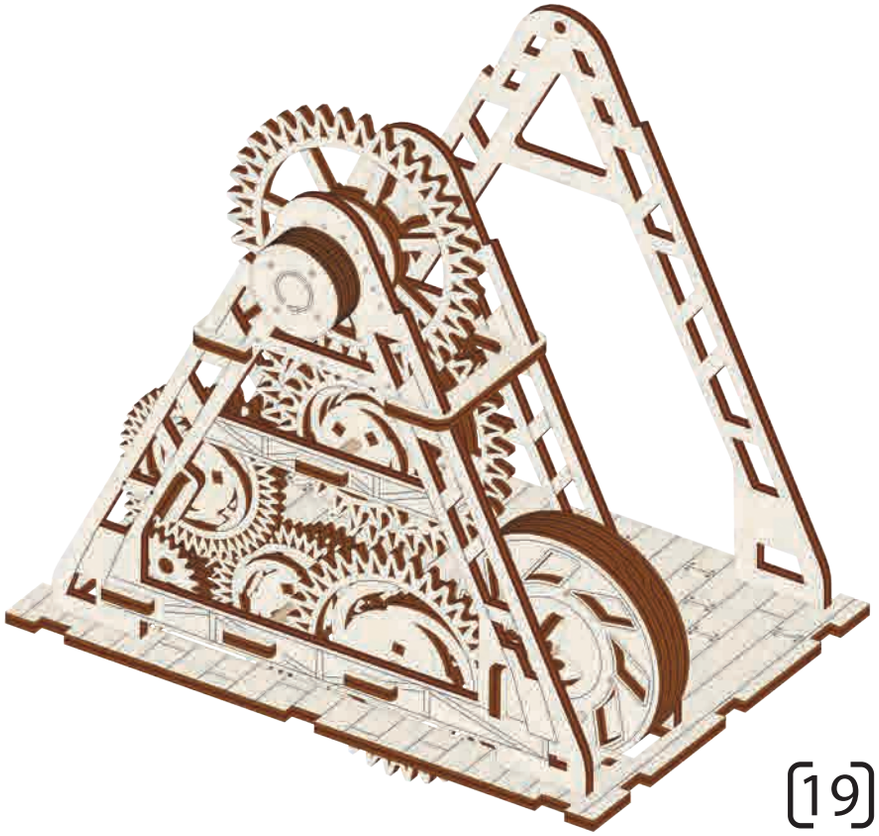

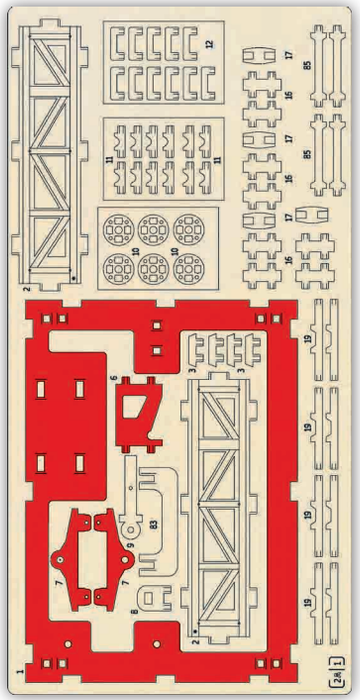

1

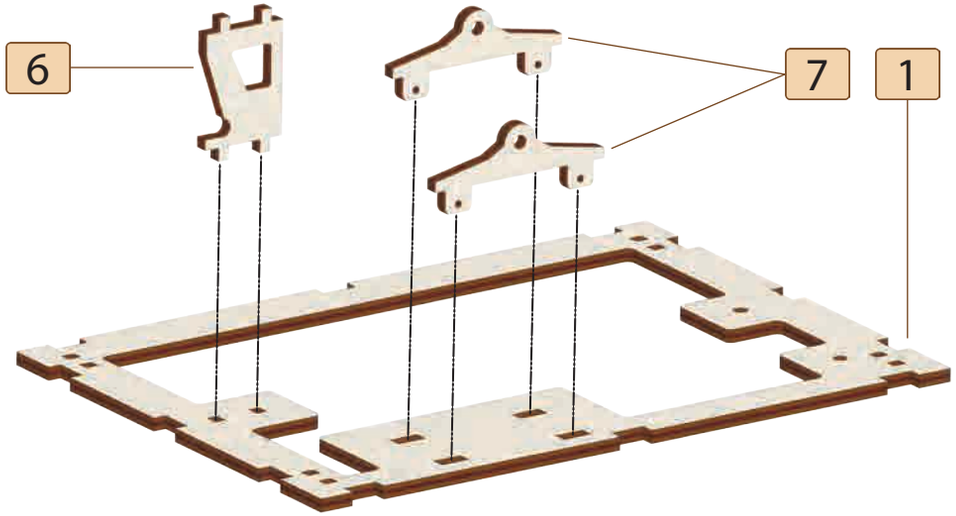

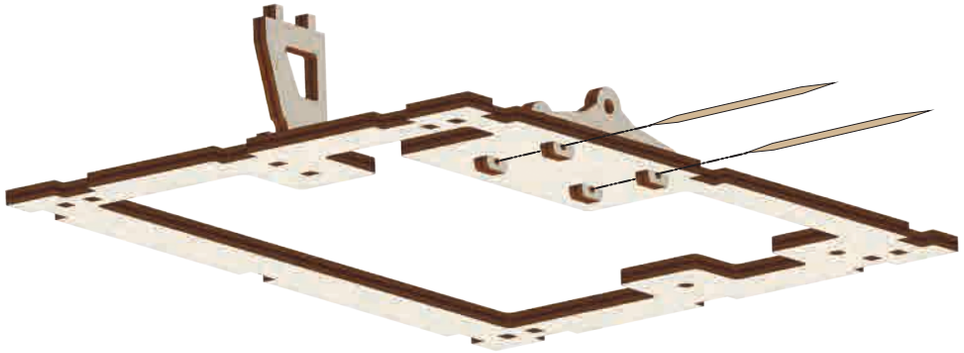

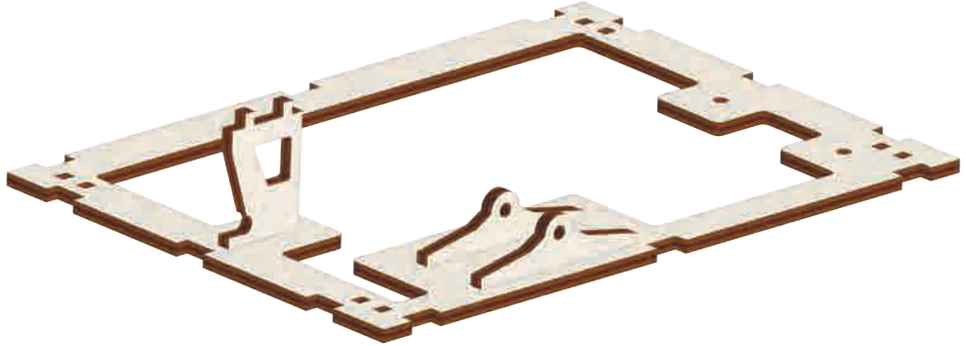

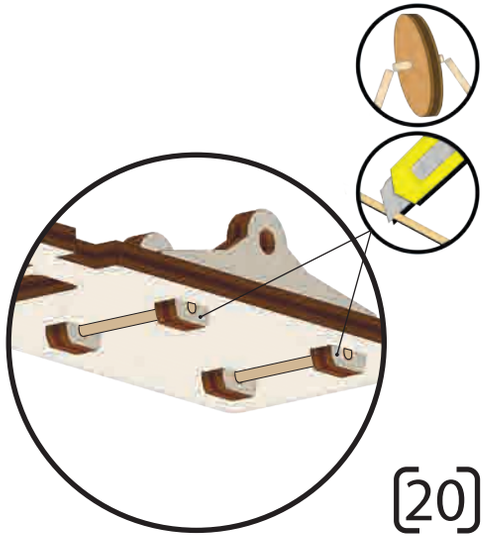

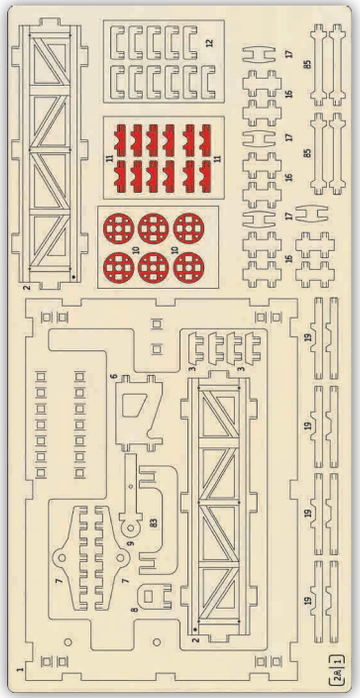

1

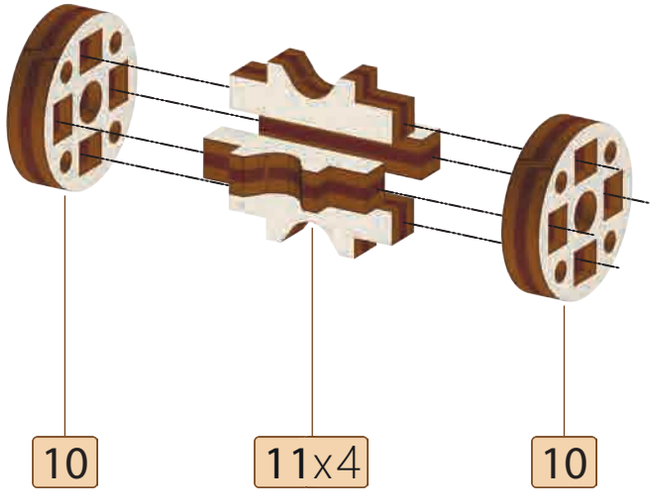

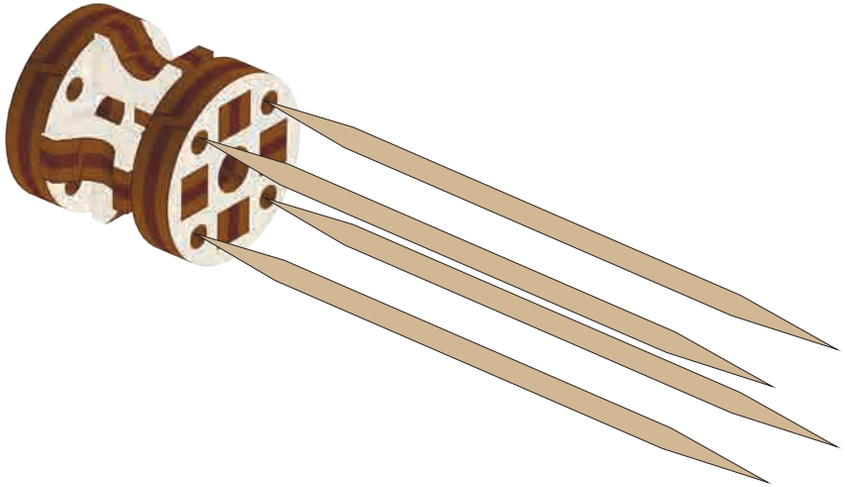

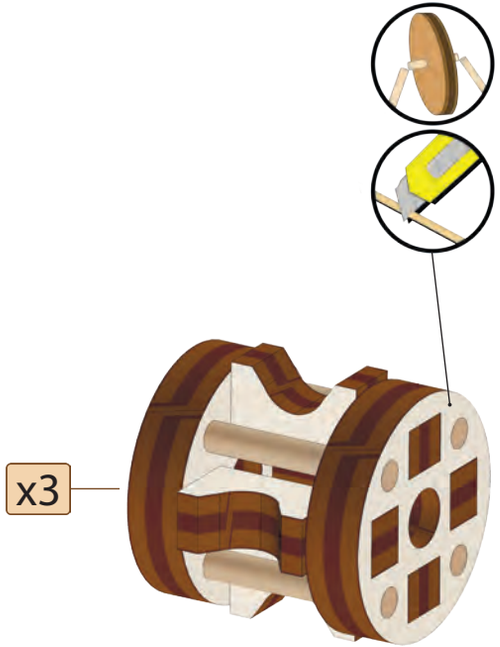

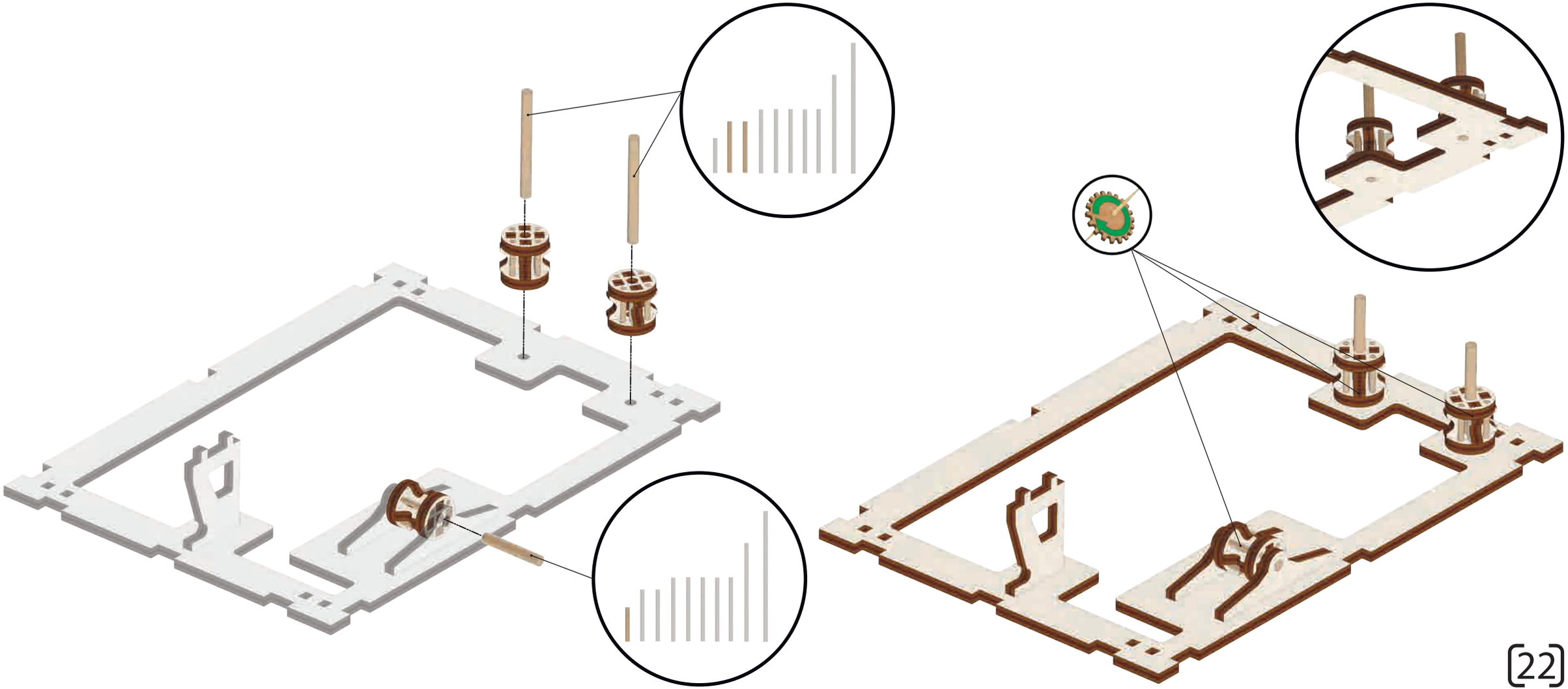

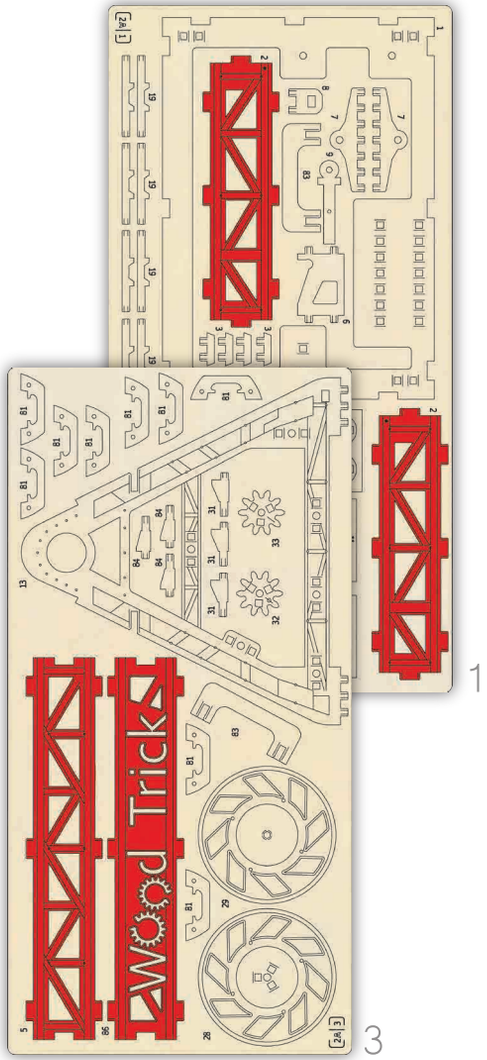
1
3

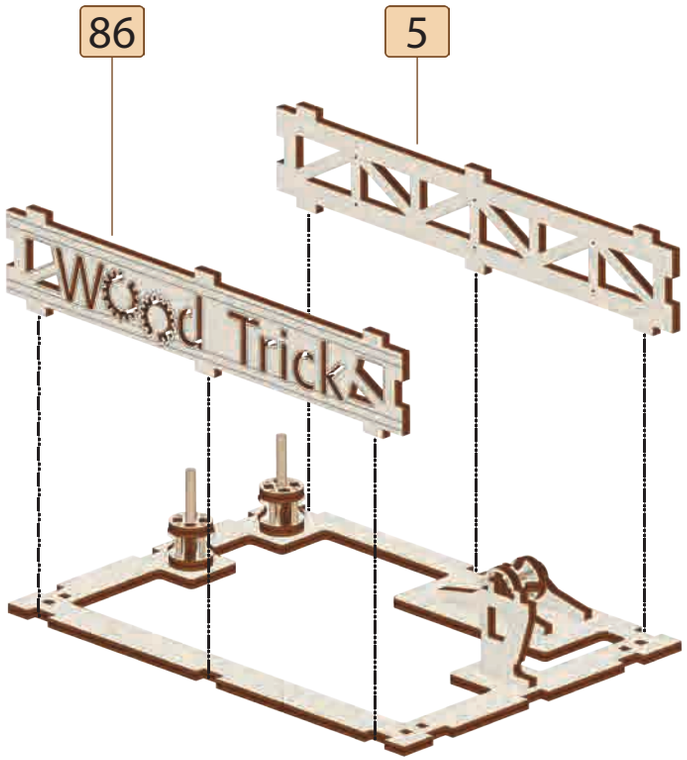
86
5

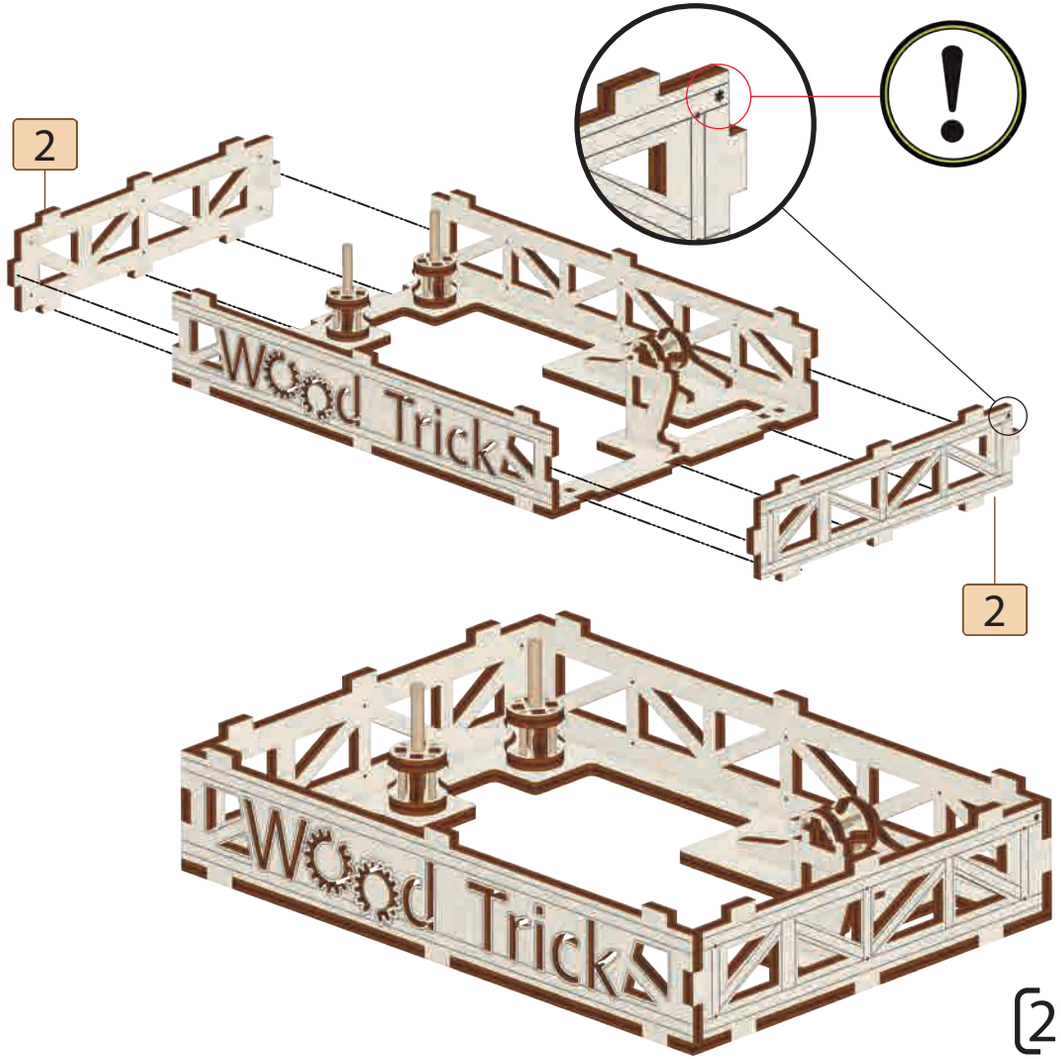
2
2

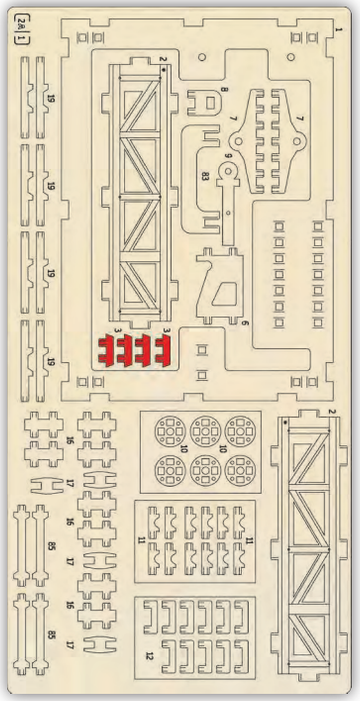

1

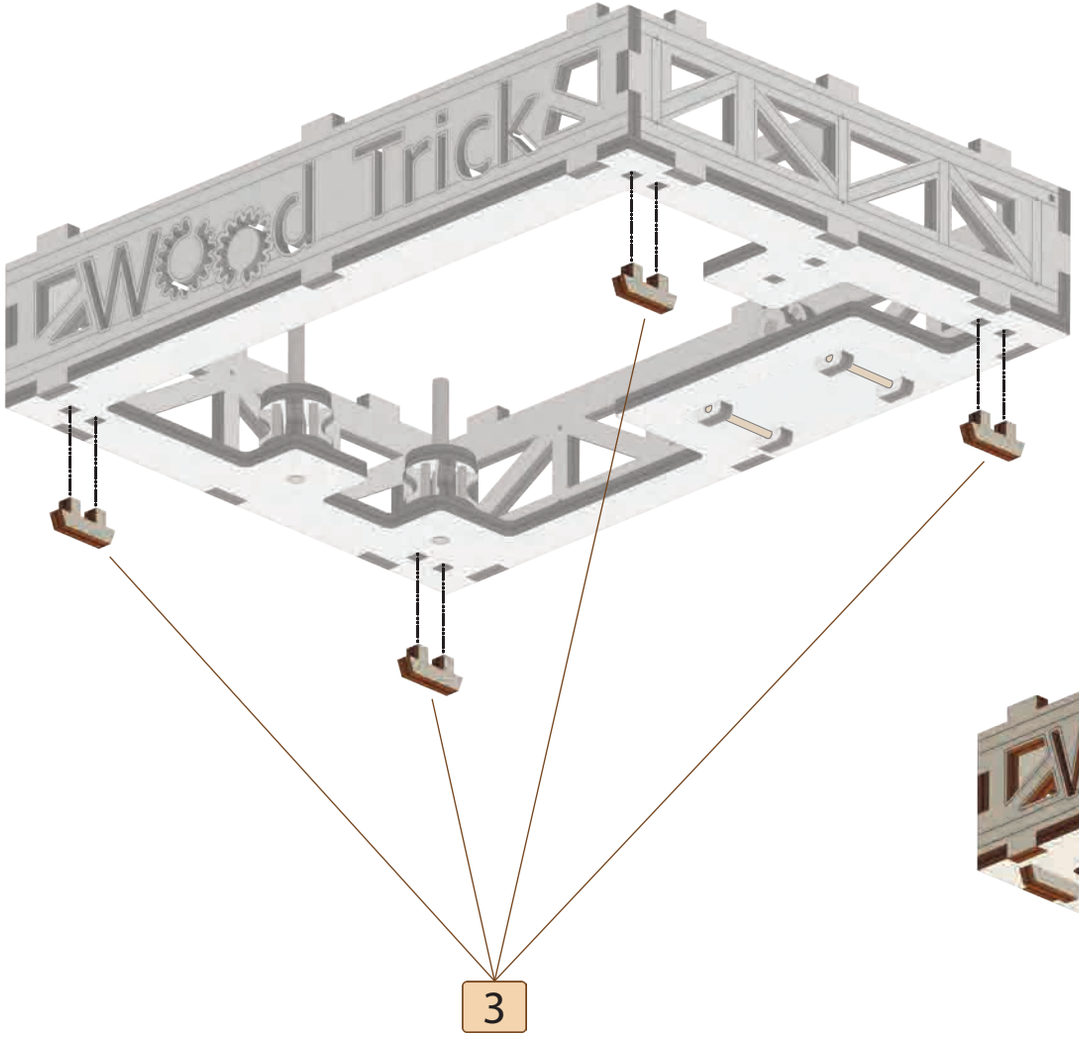

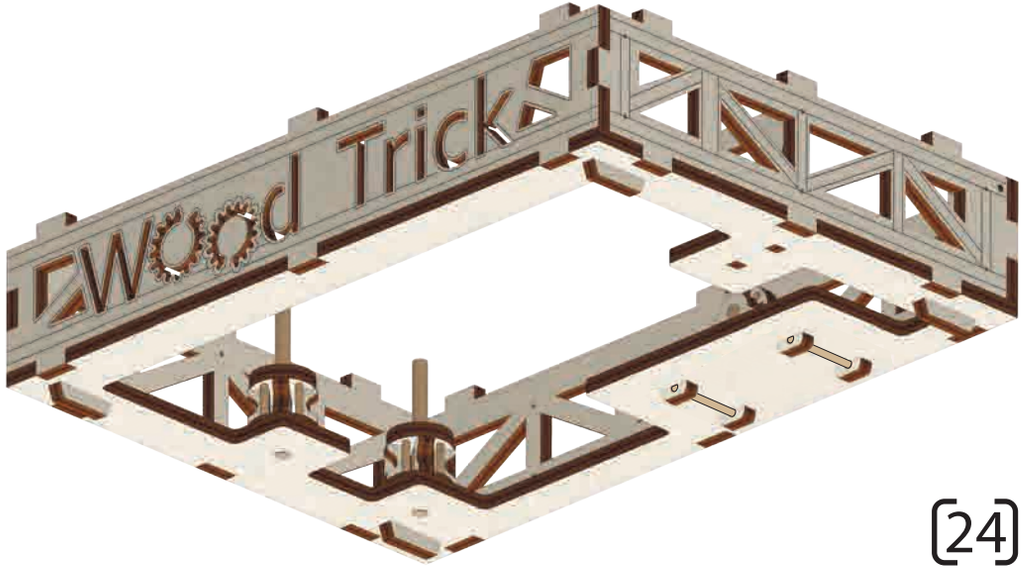

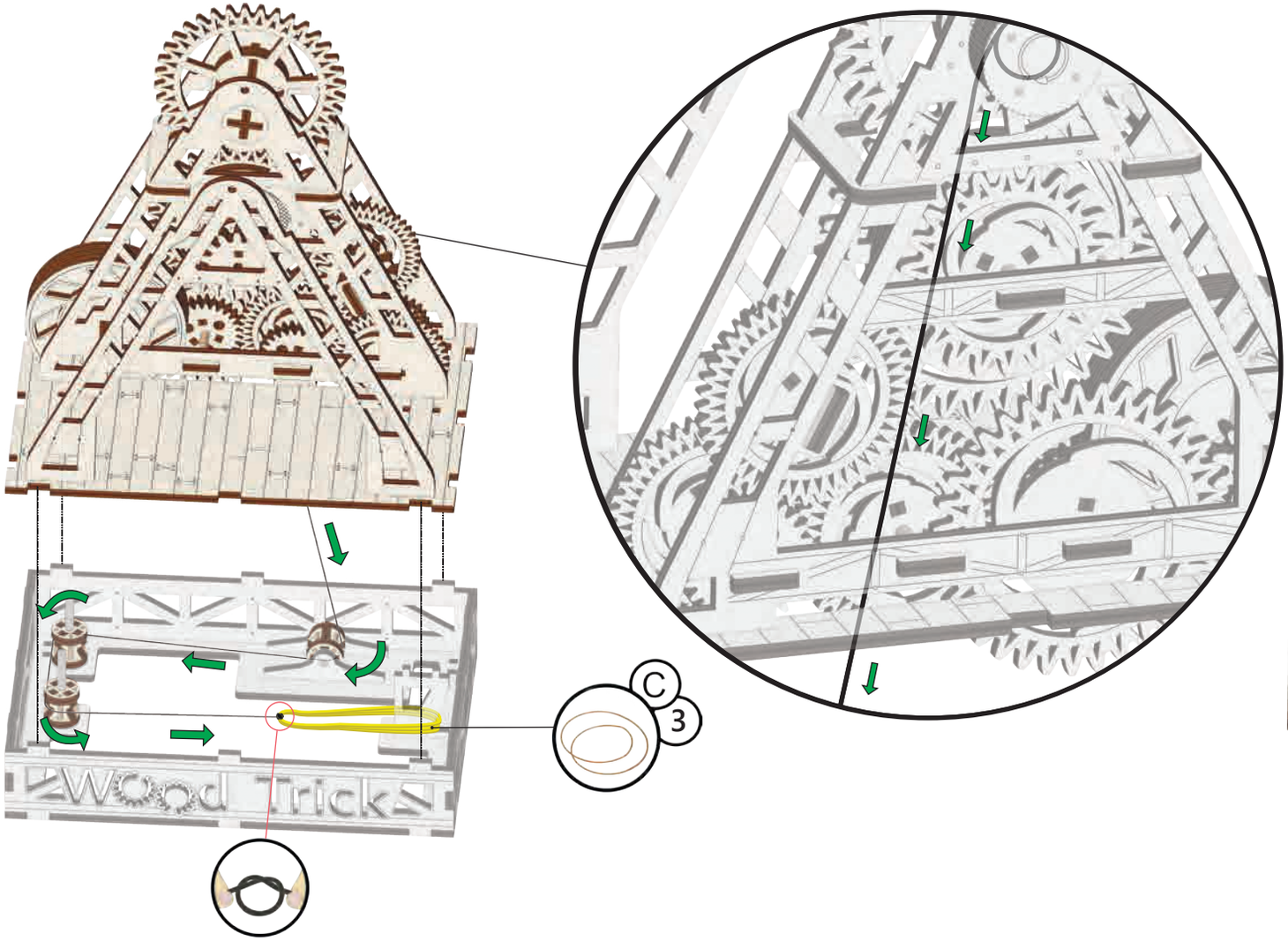
Wood Trick
C
3

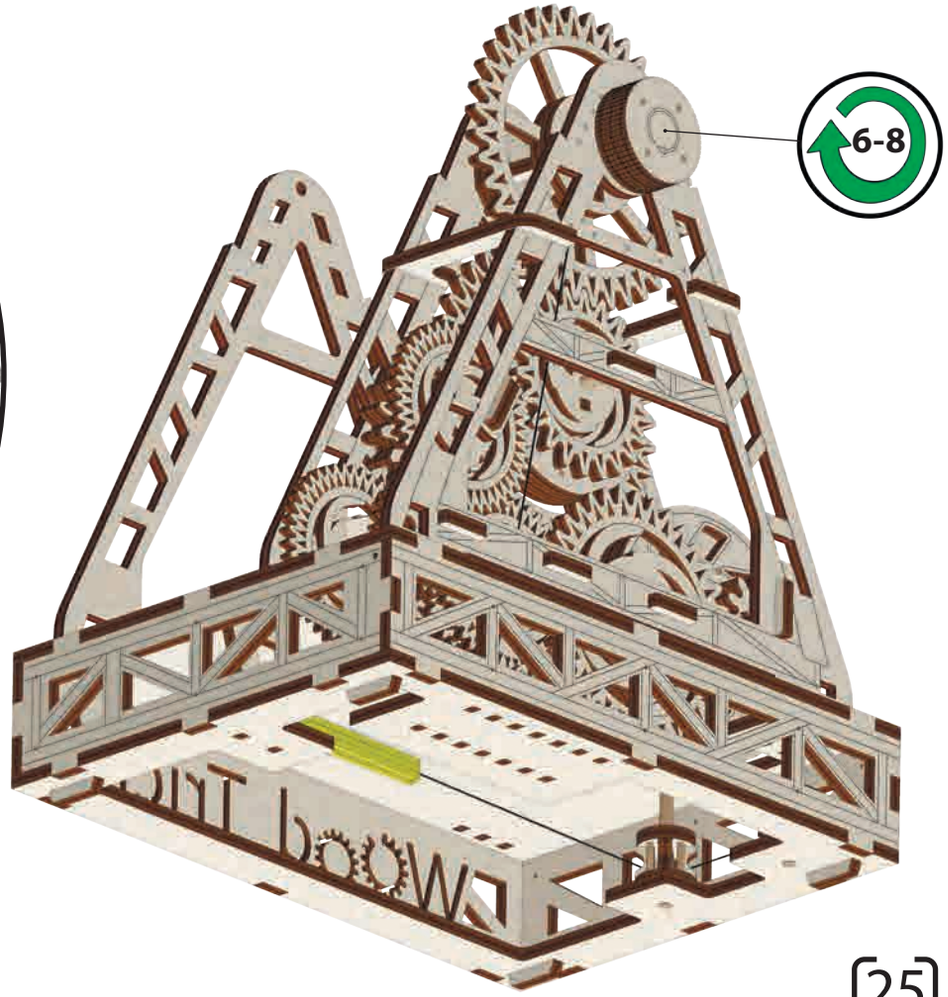
6-8

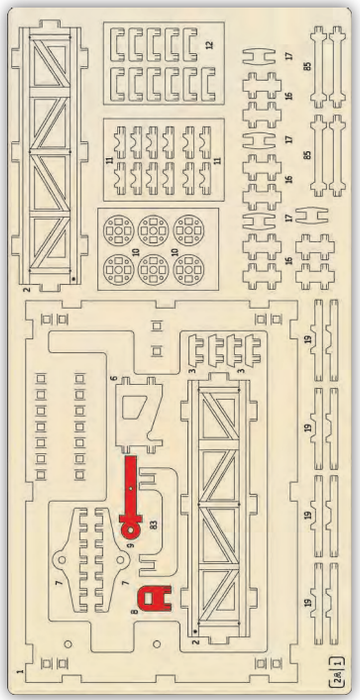

1

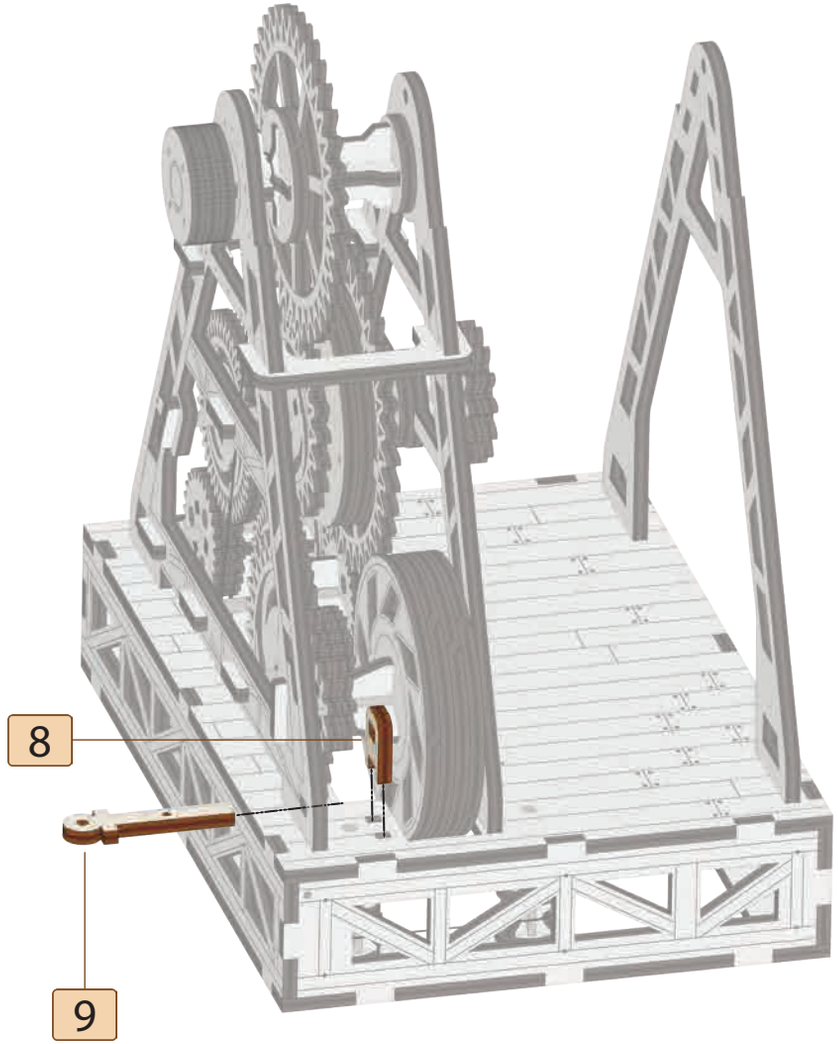

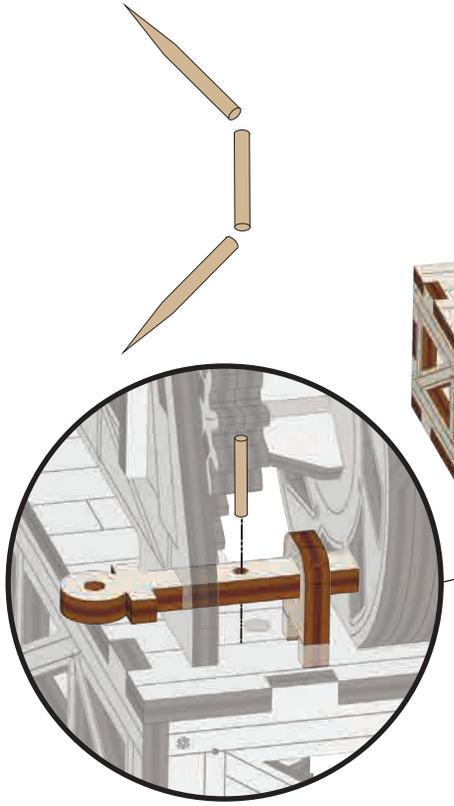

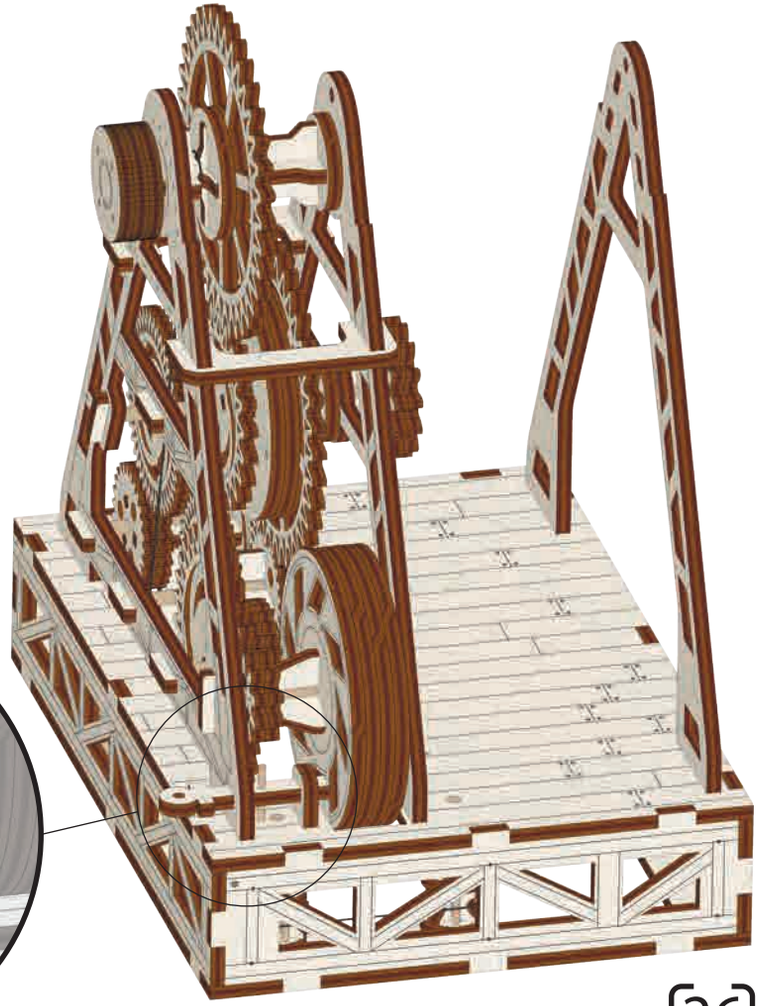

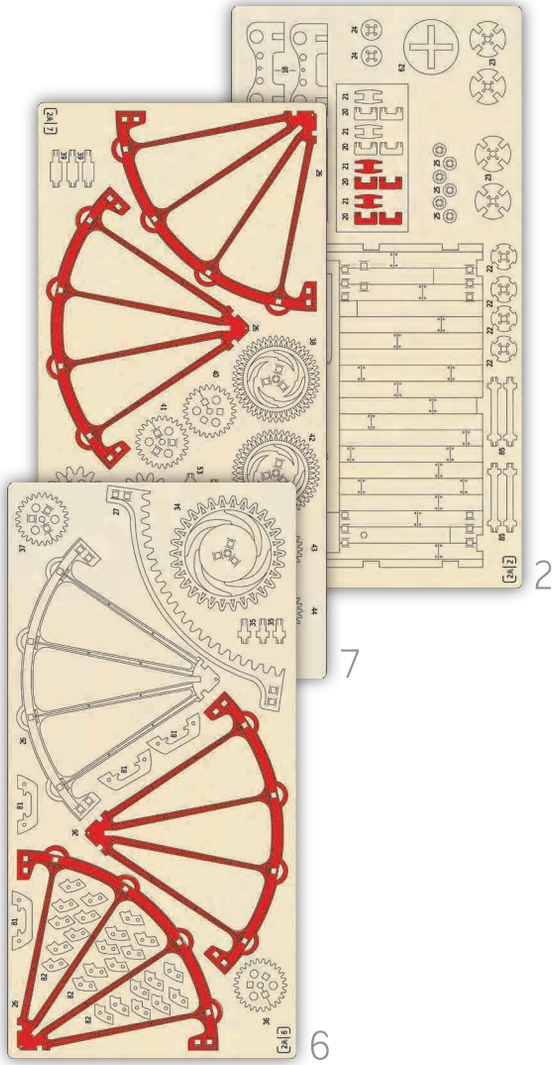
2
7
6

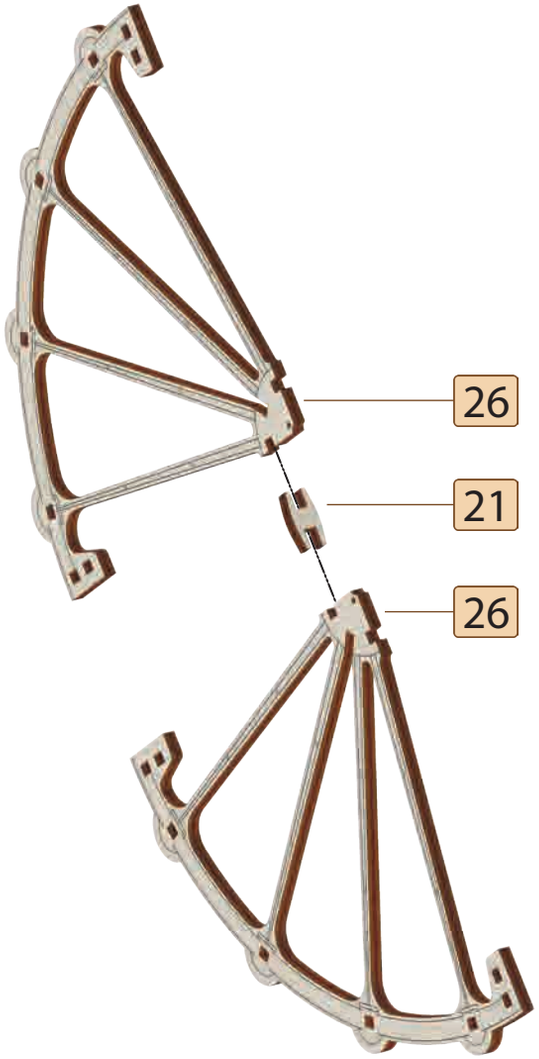
26
21
26

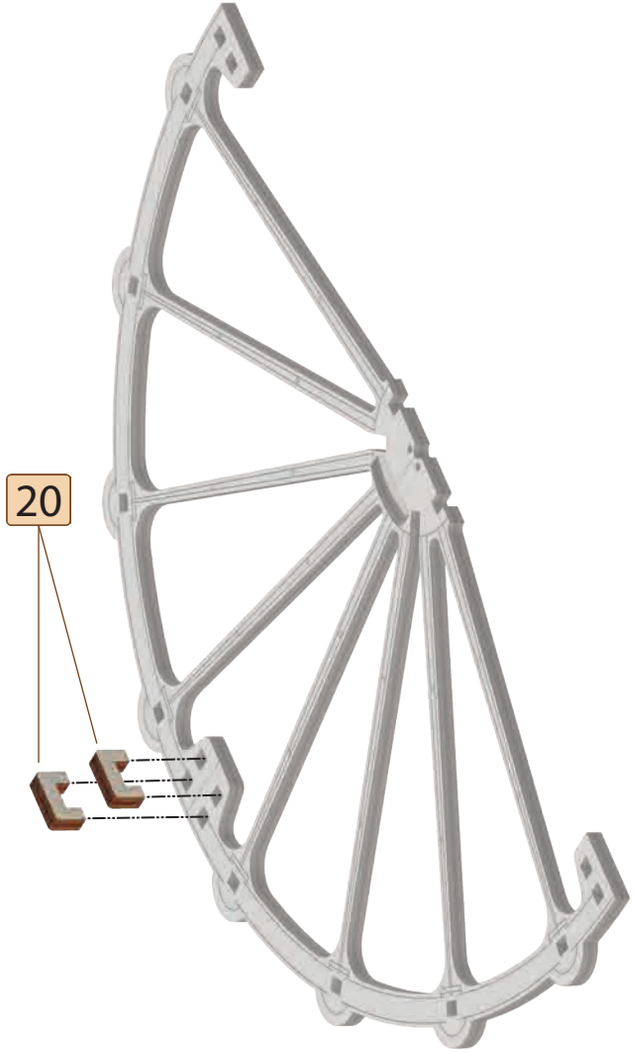
20

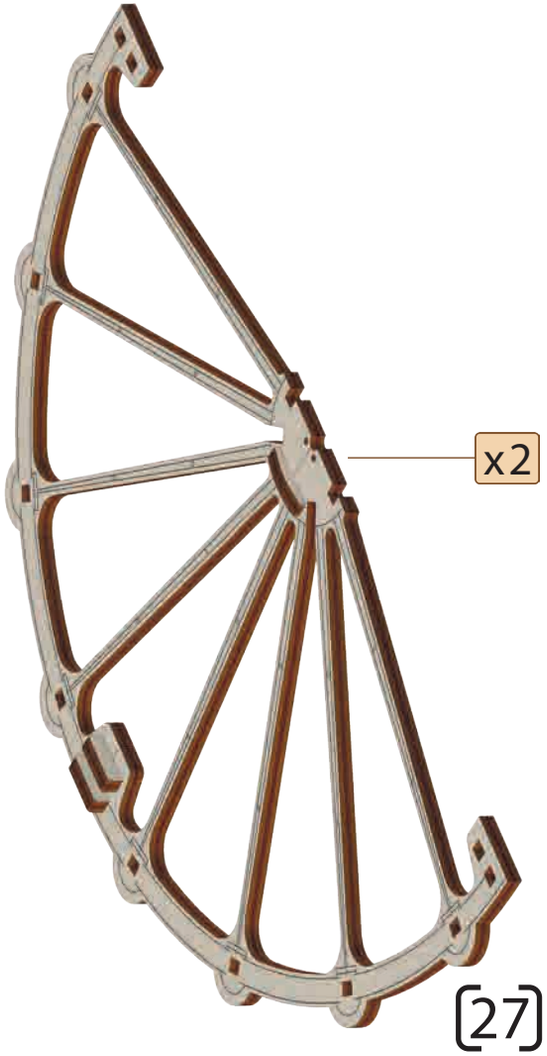
x2
27

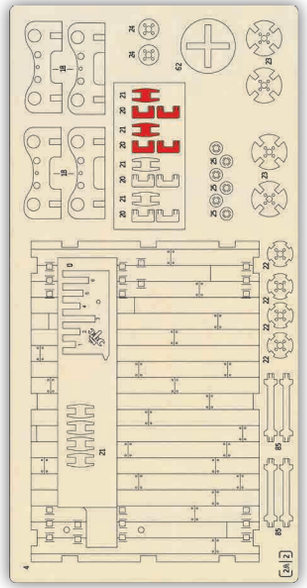

2

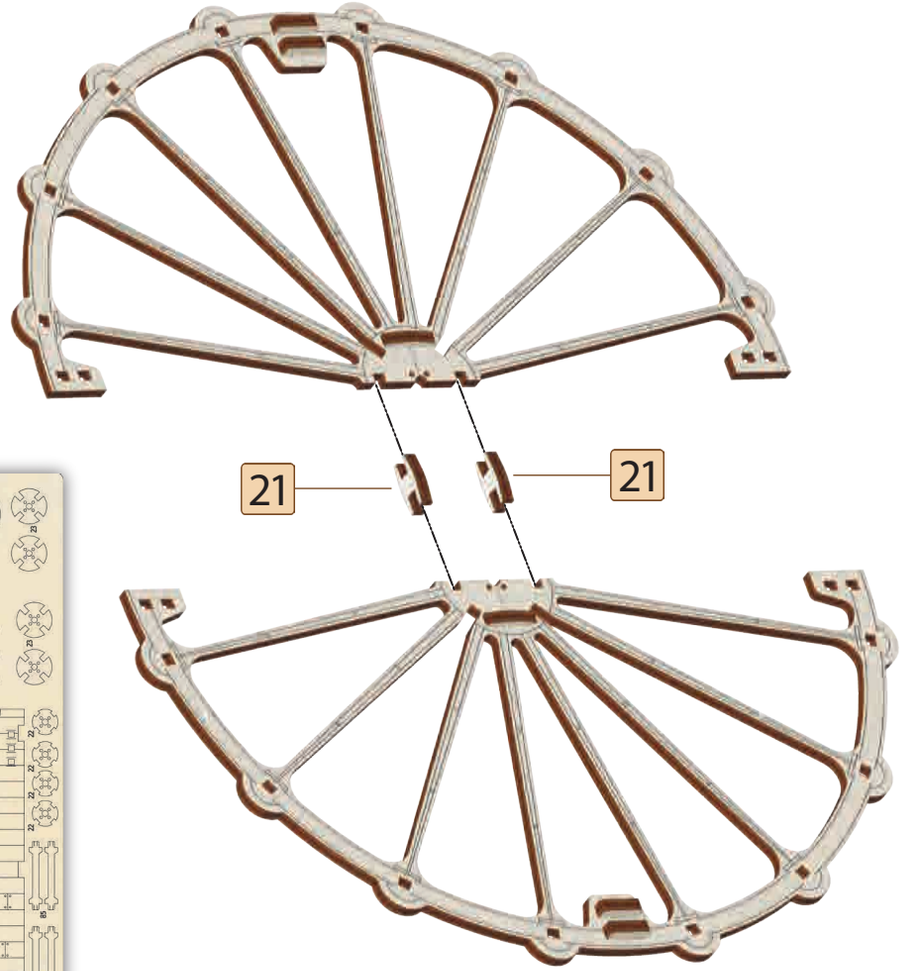

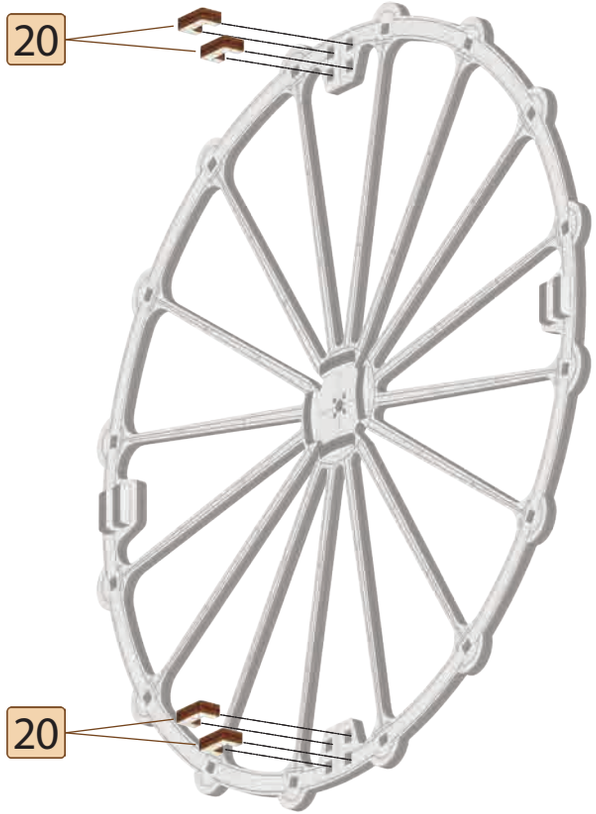

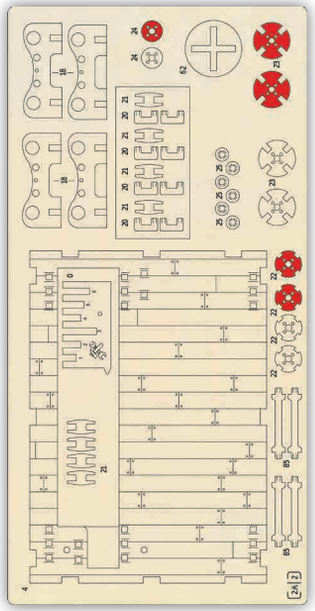

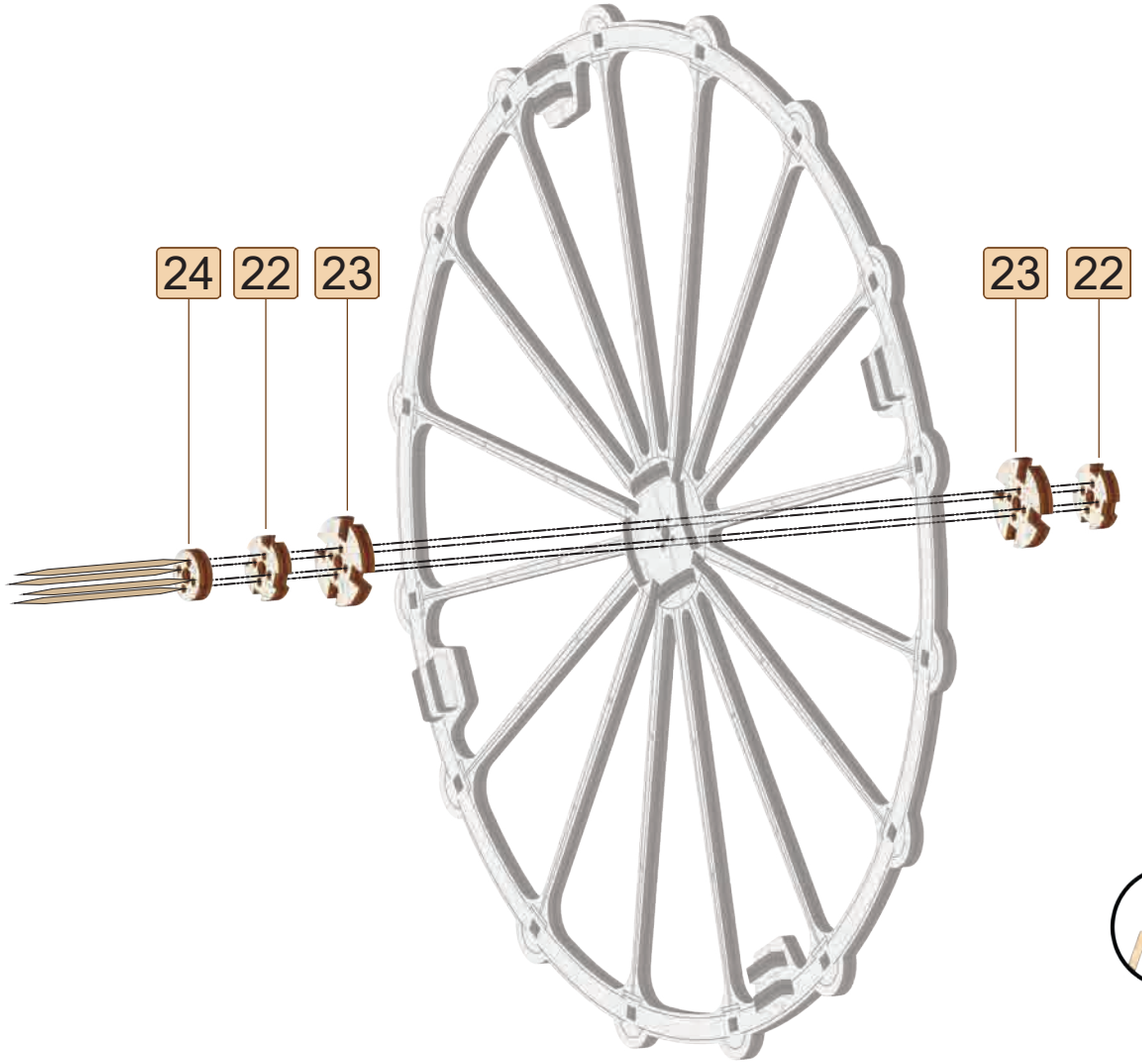

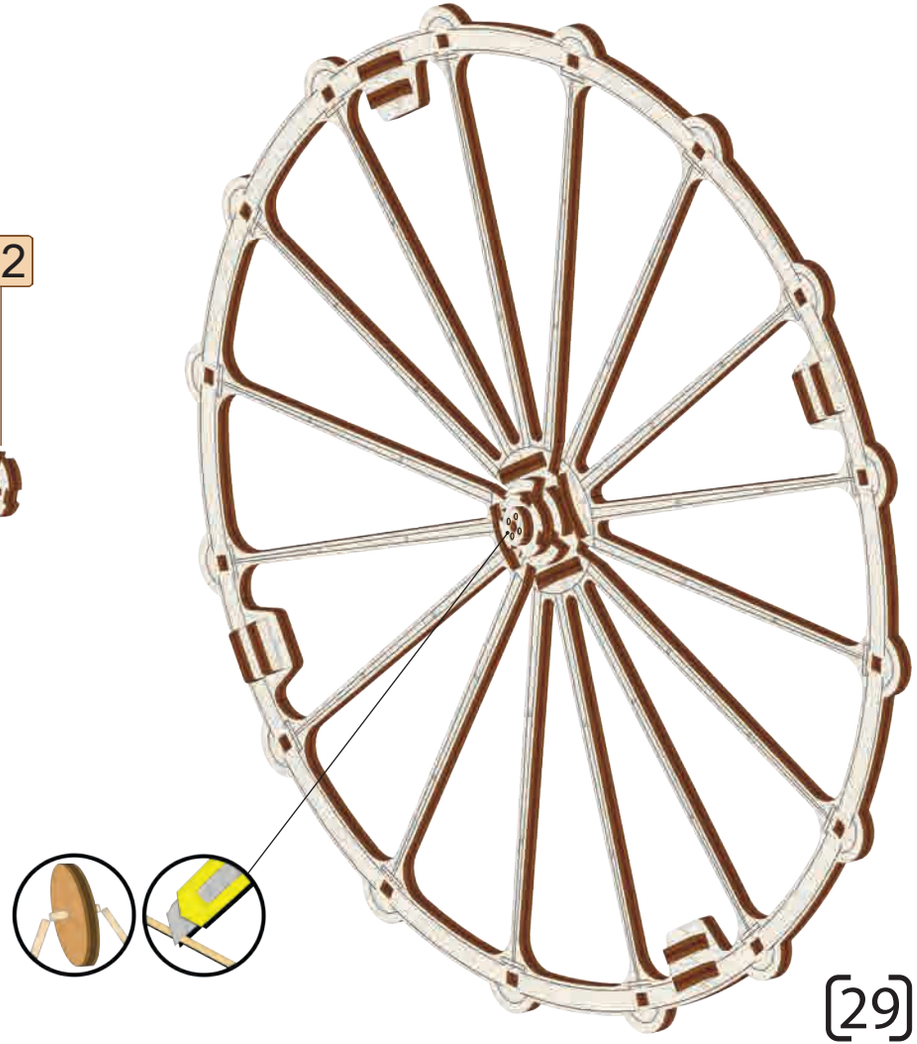

[29]

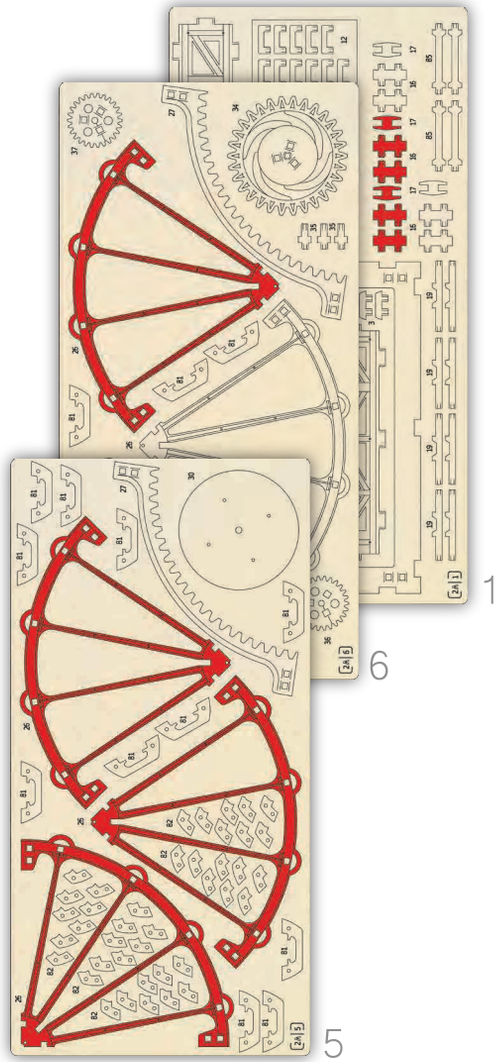
1
6
5

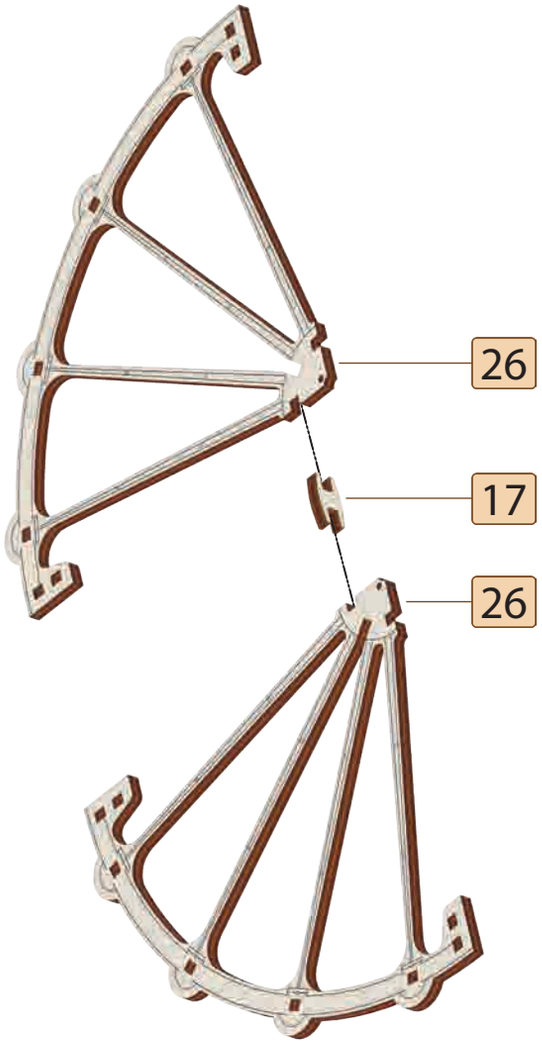
26
17
26

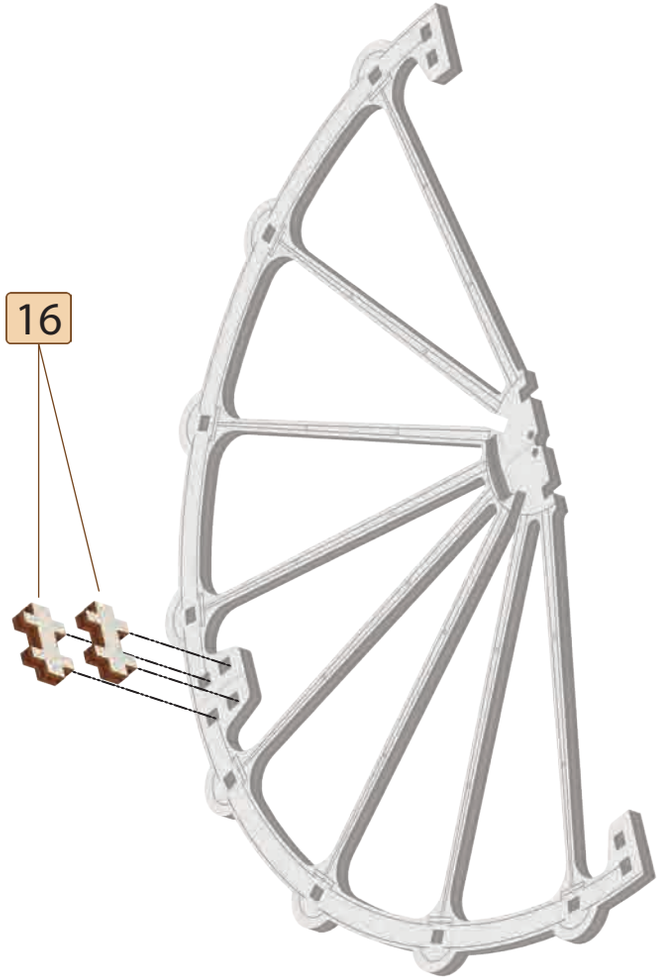
16

x2

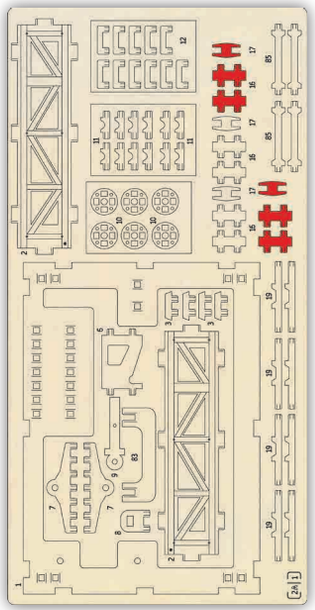

1

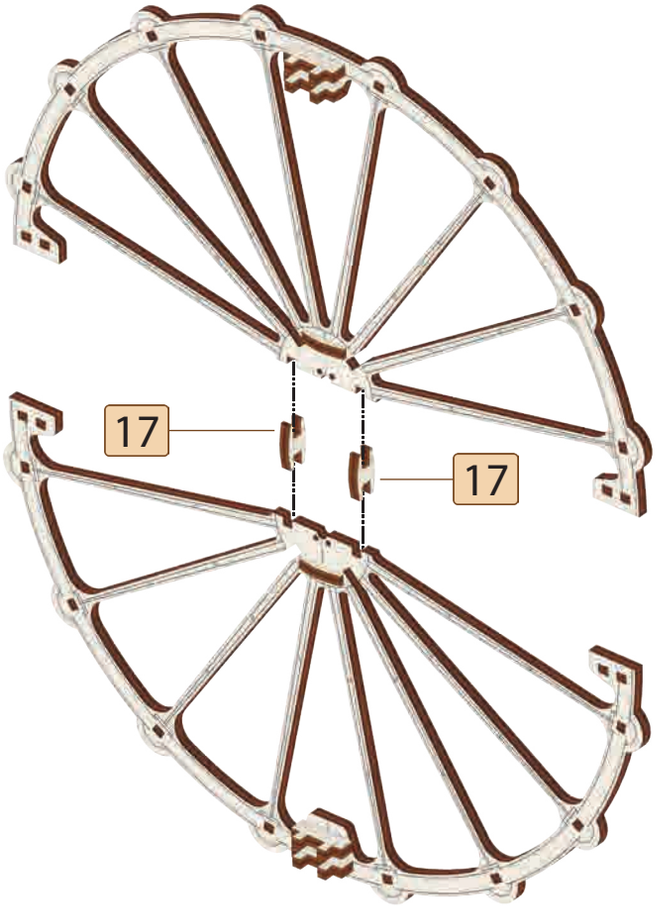

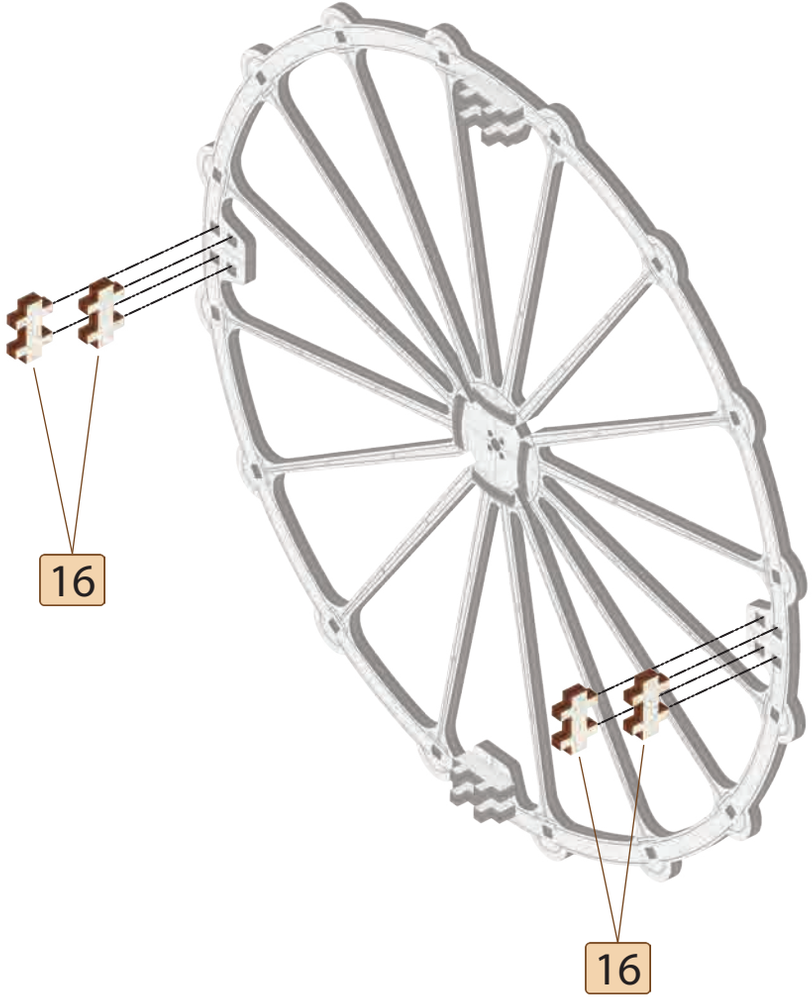

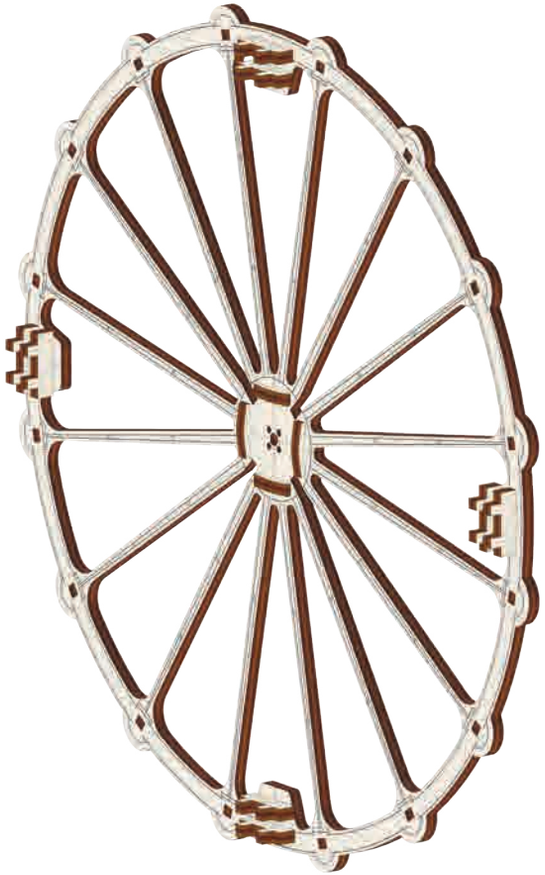

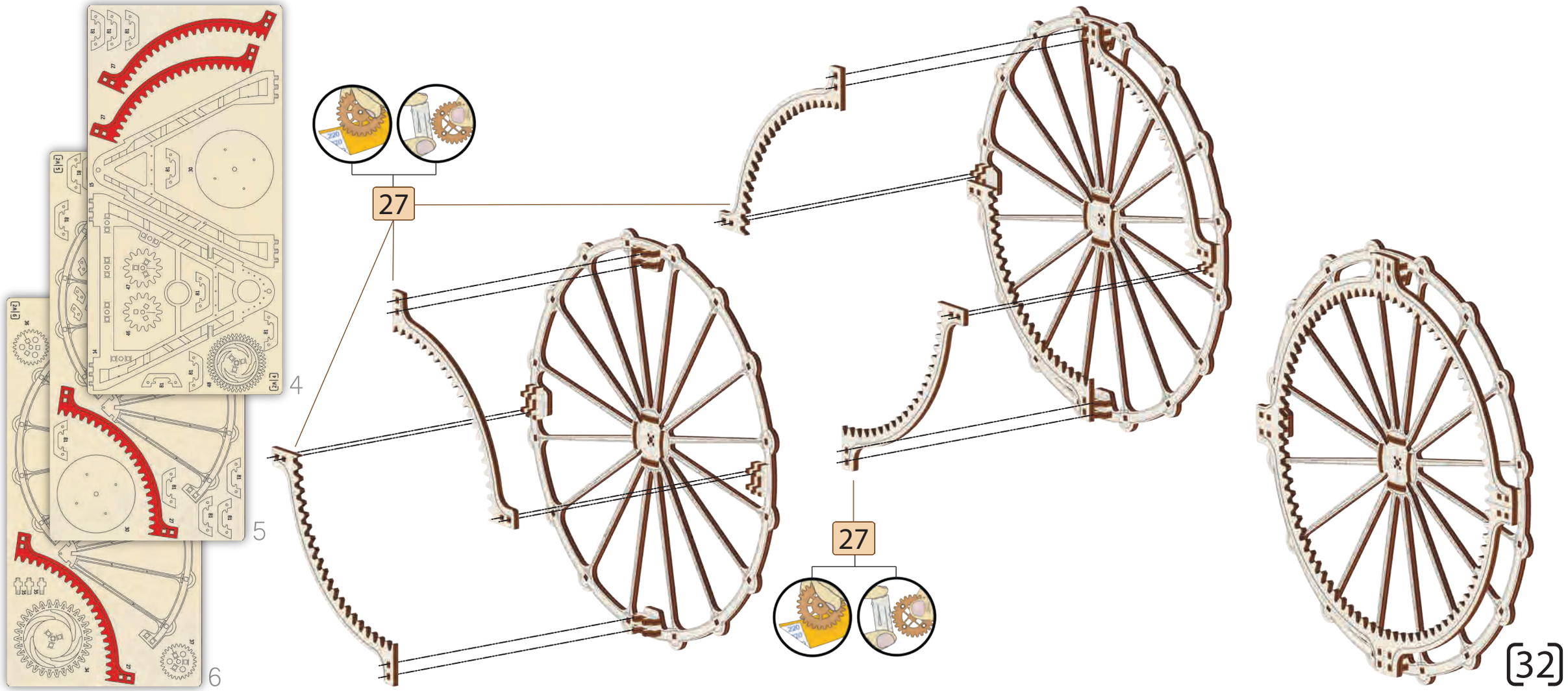
4
5
6
27
27

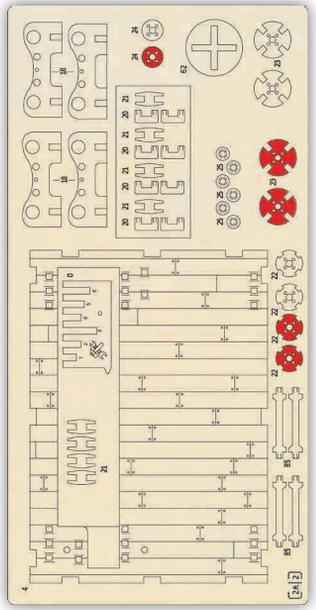

2

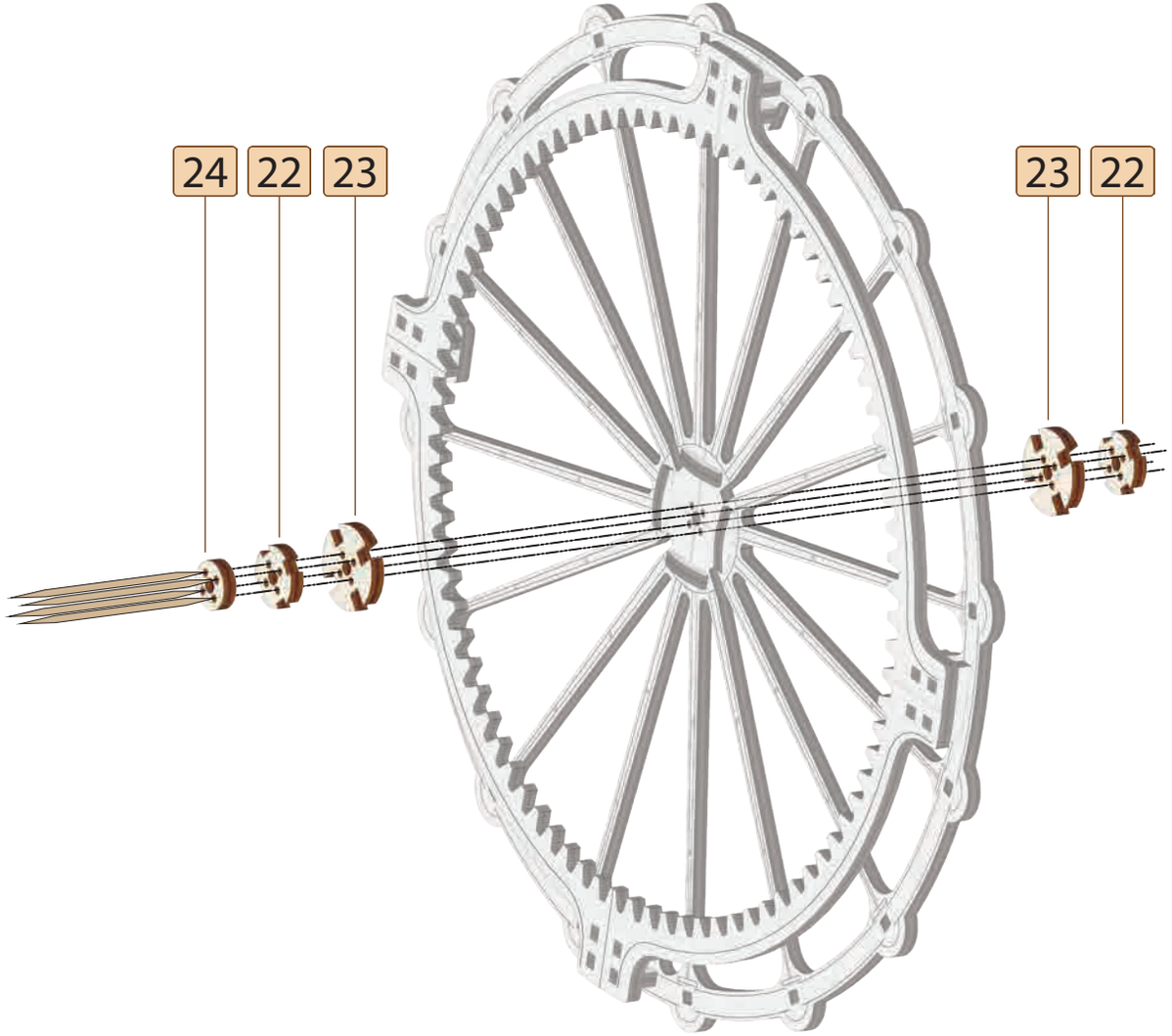

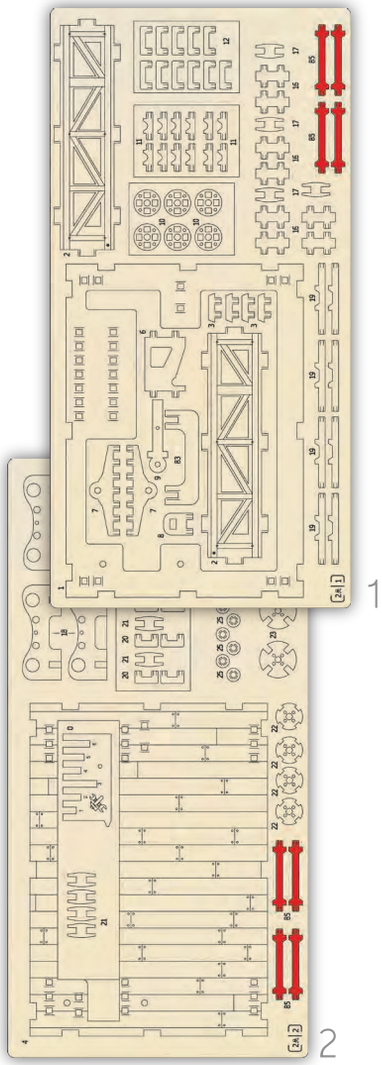
1
2

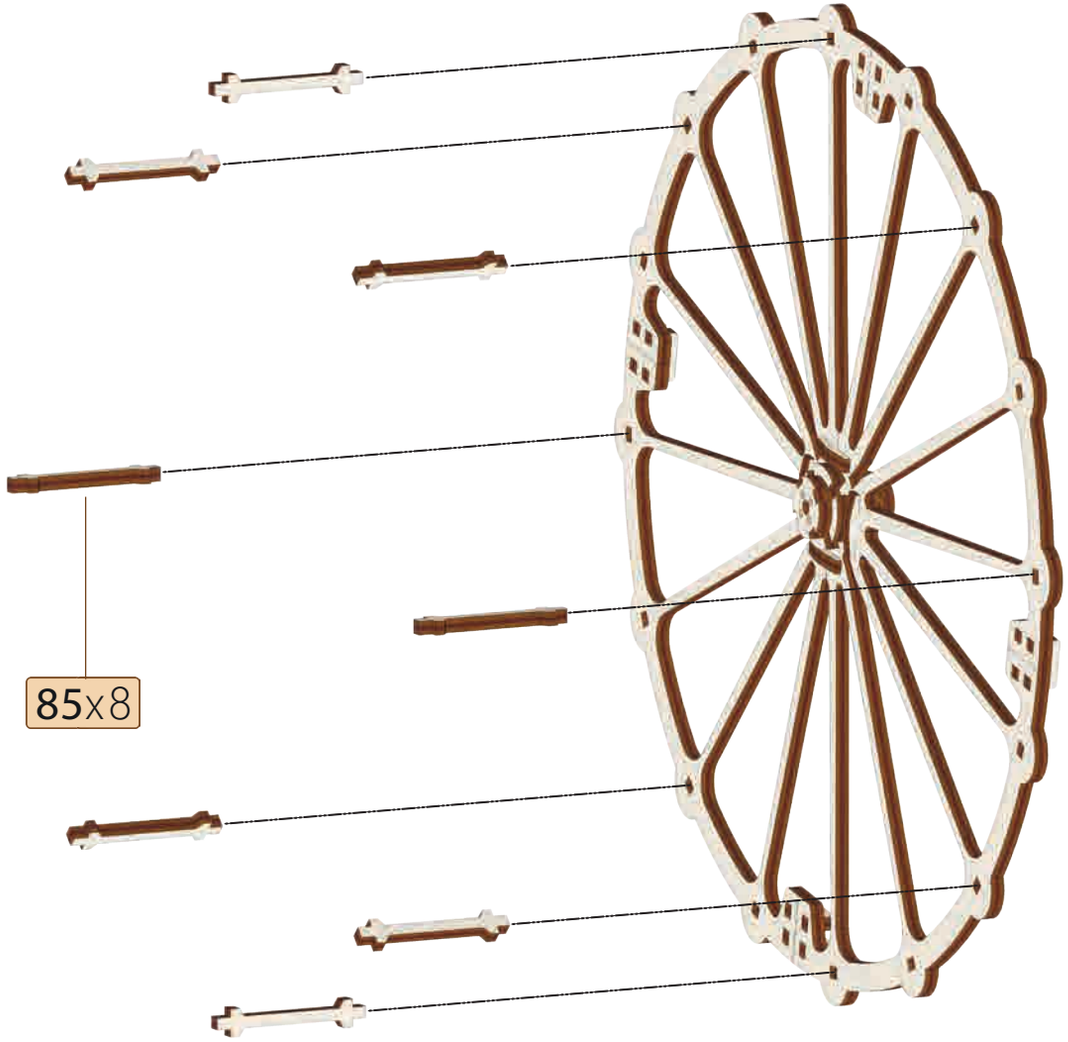
85x8

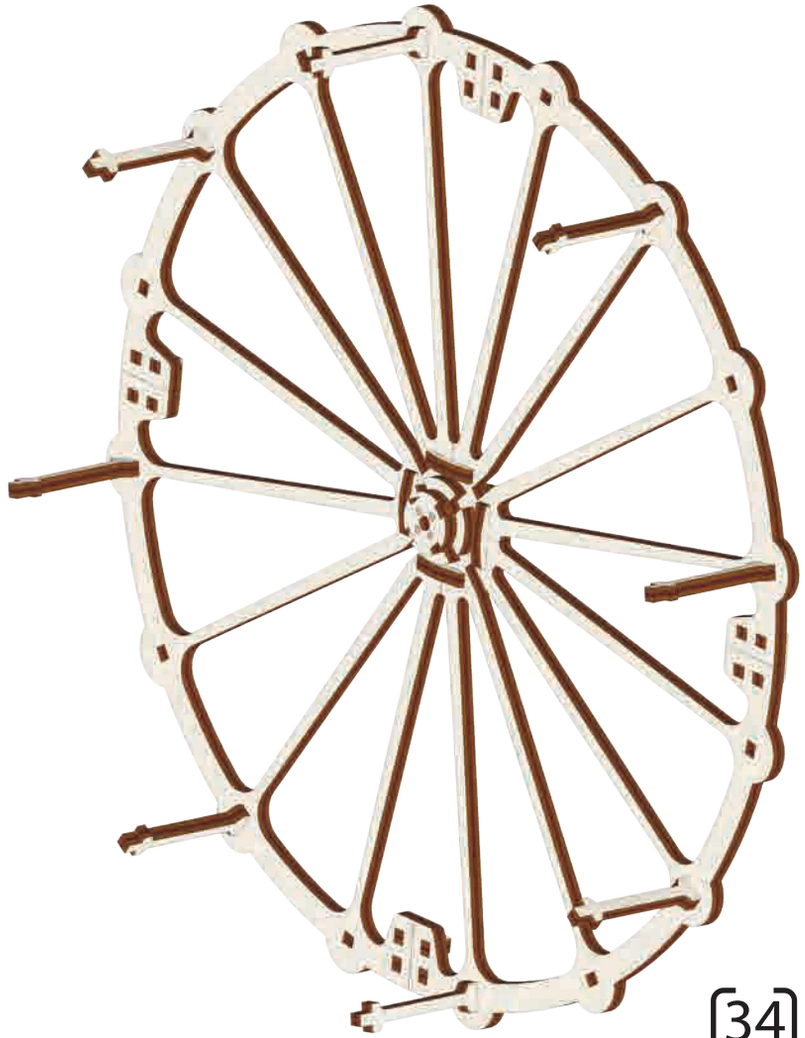

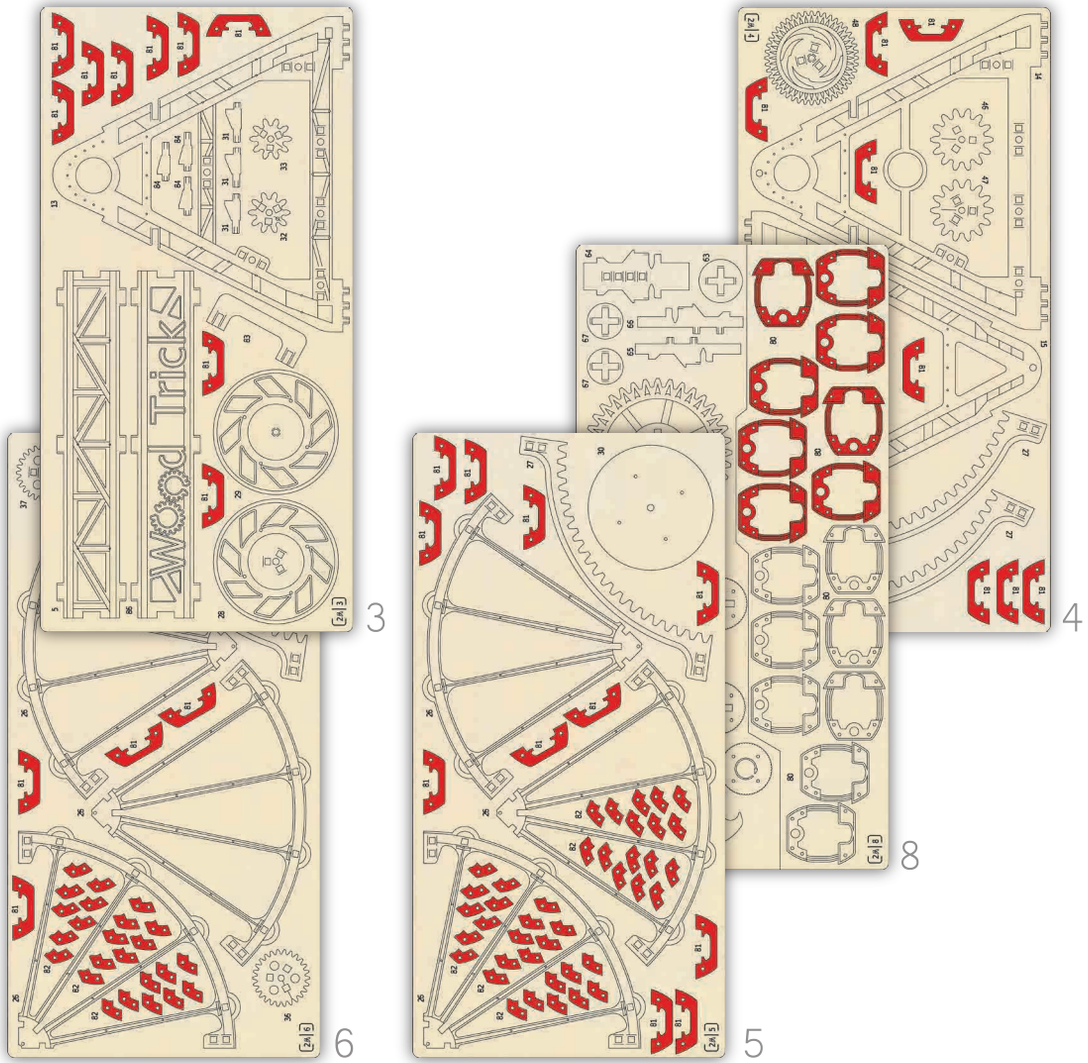
Wood Tricks
3
4
8
5
6

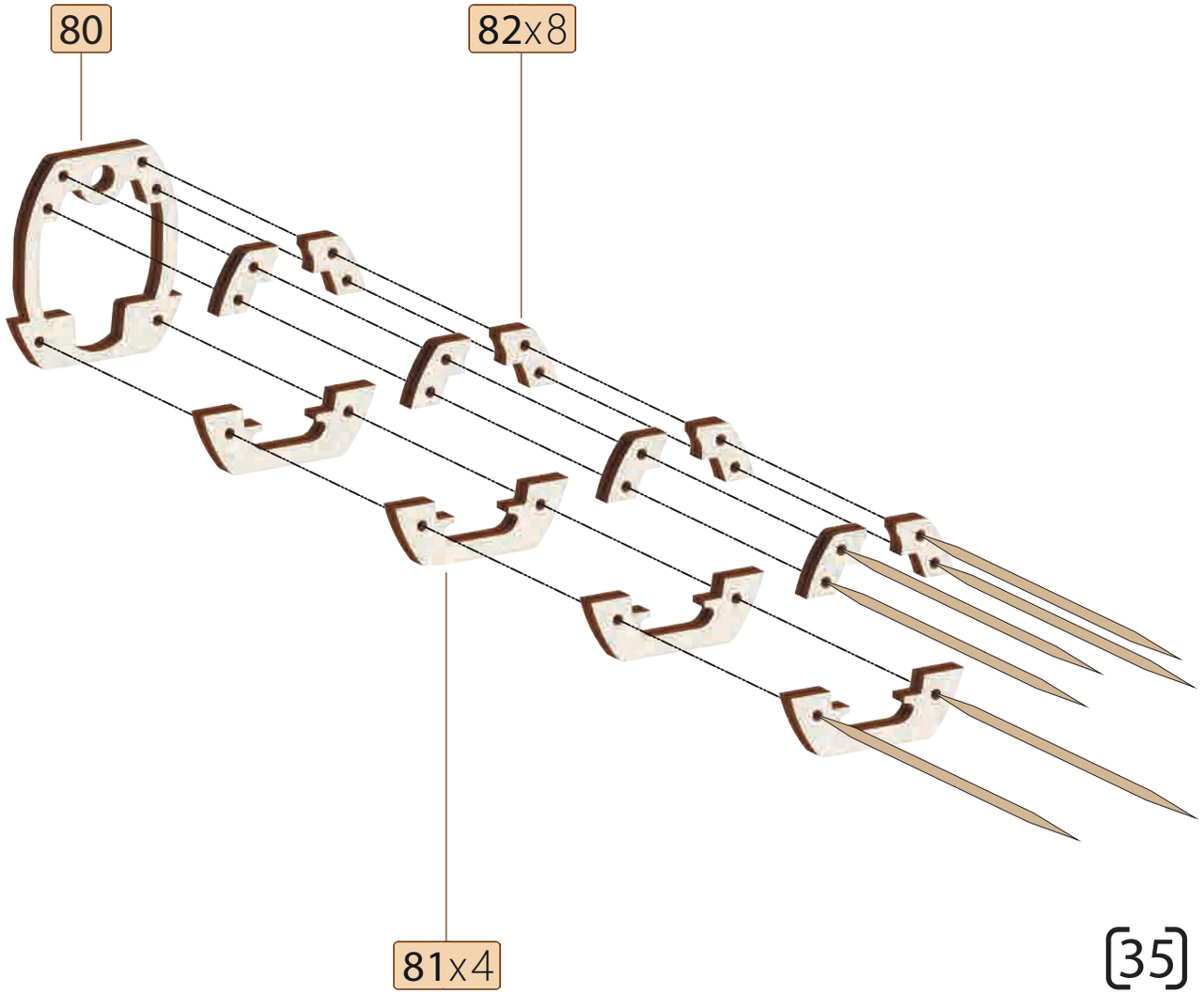
80
82x8
81x4

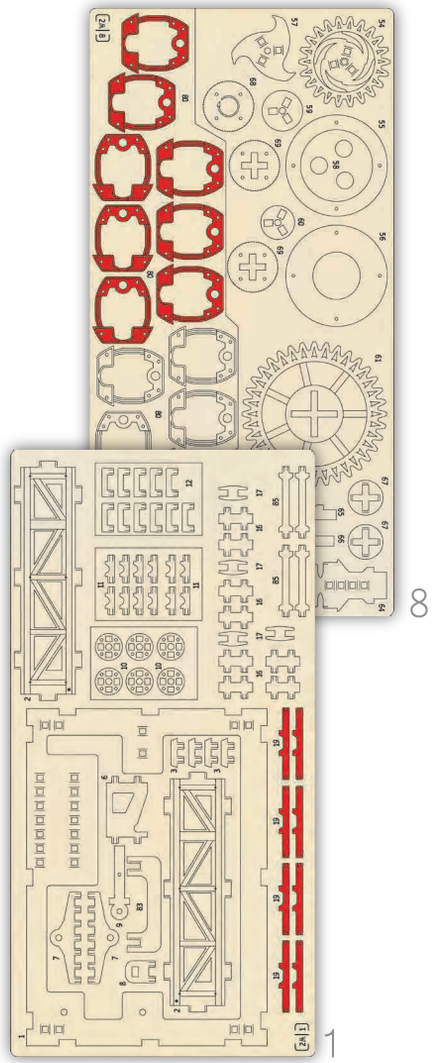
8
1

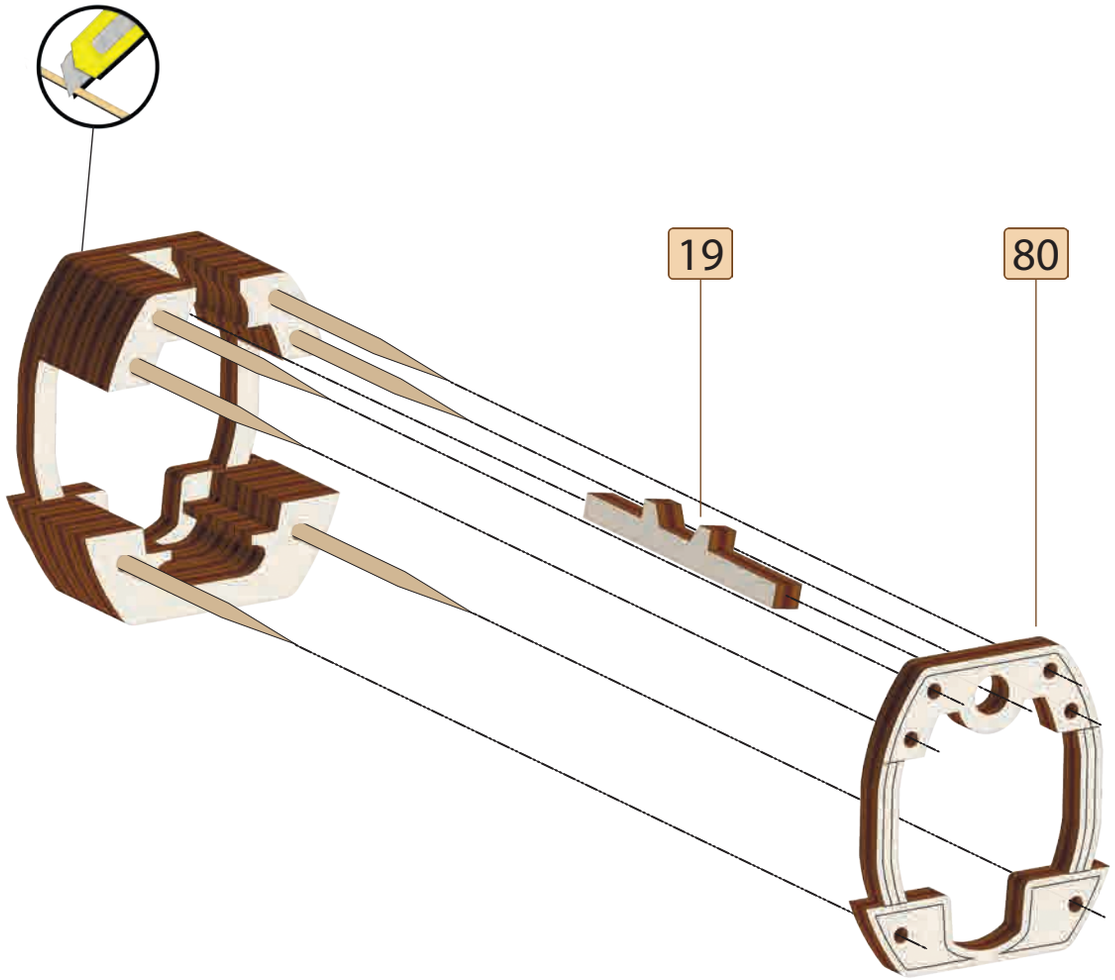
19
80

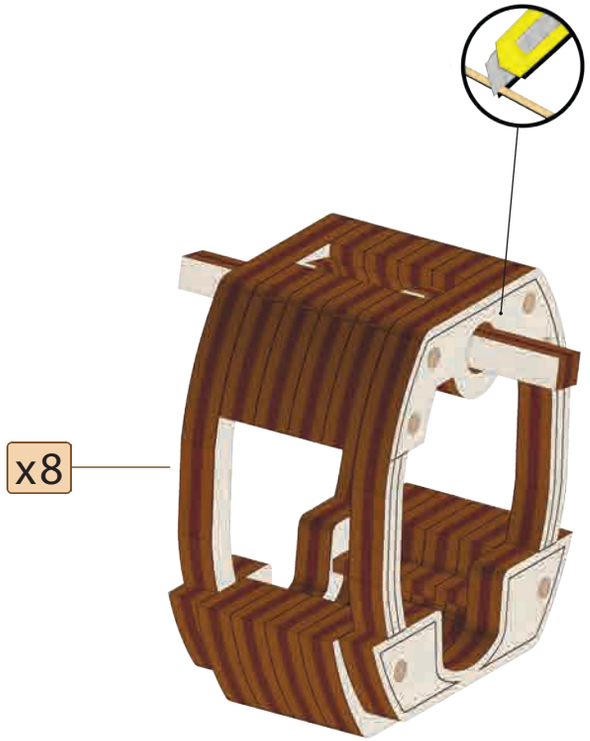
x8

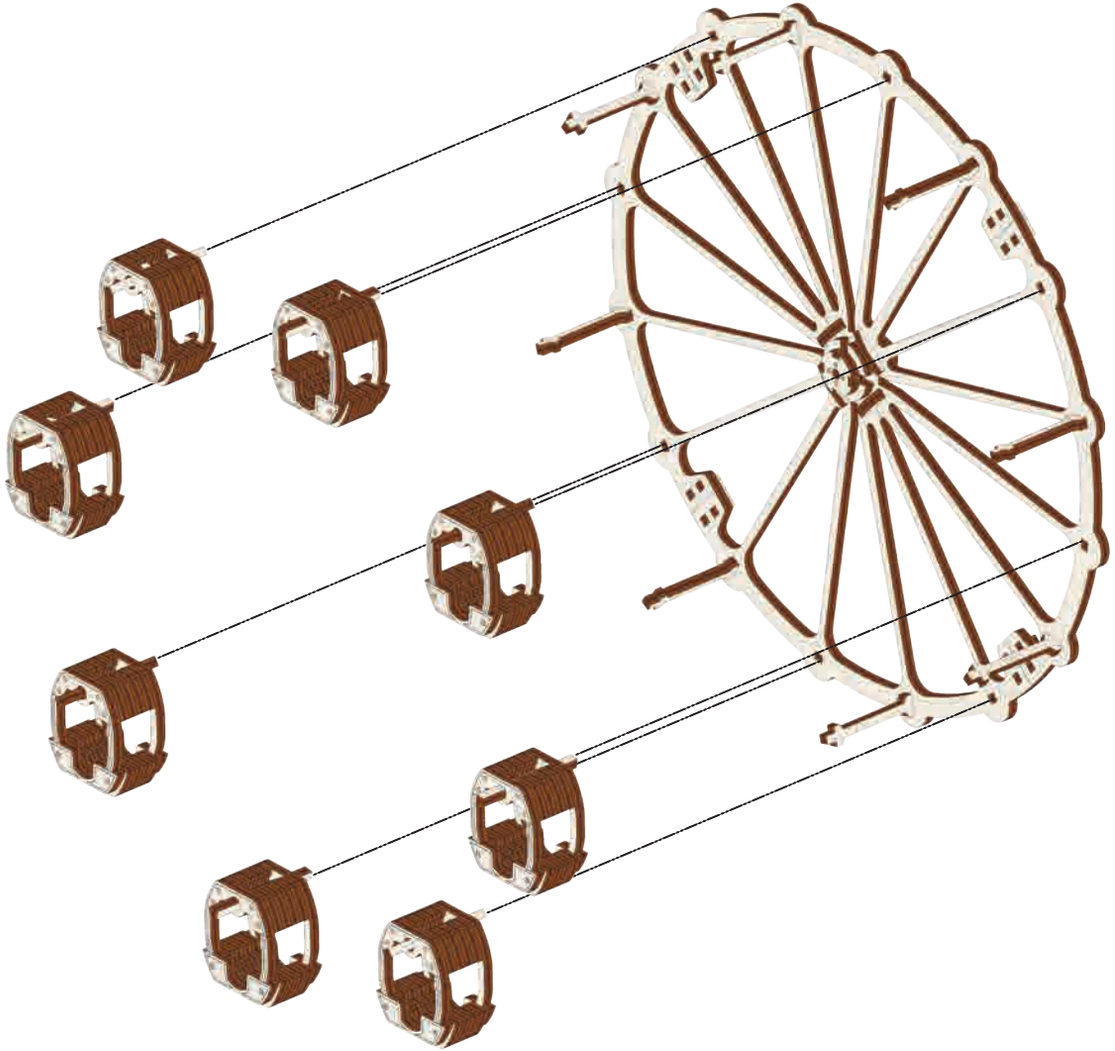

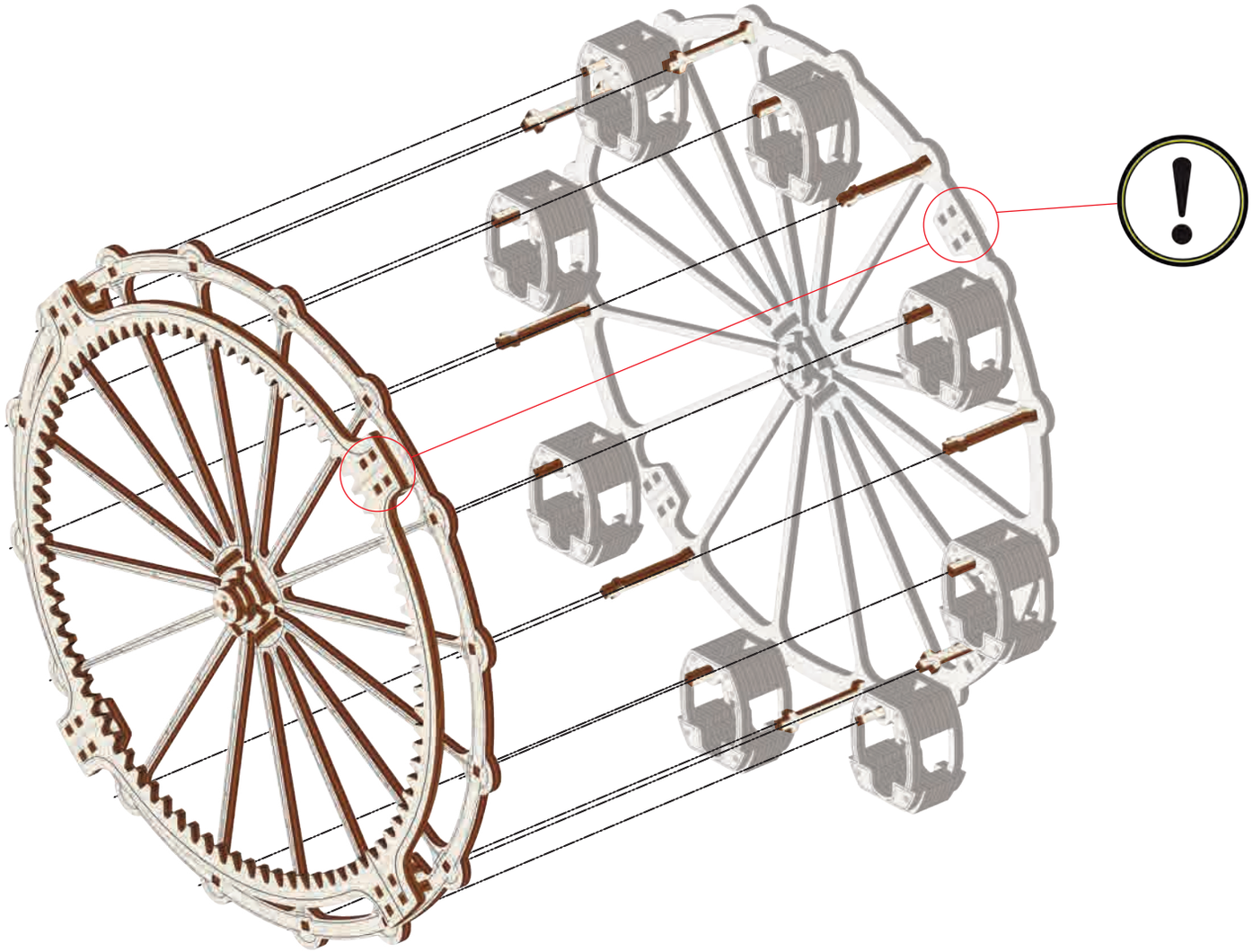

2

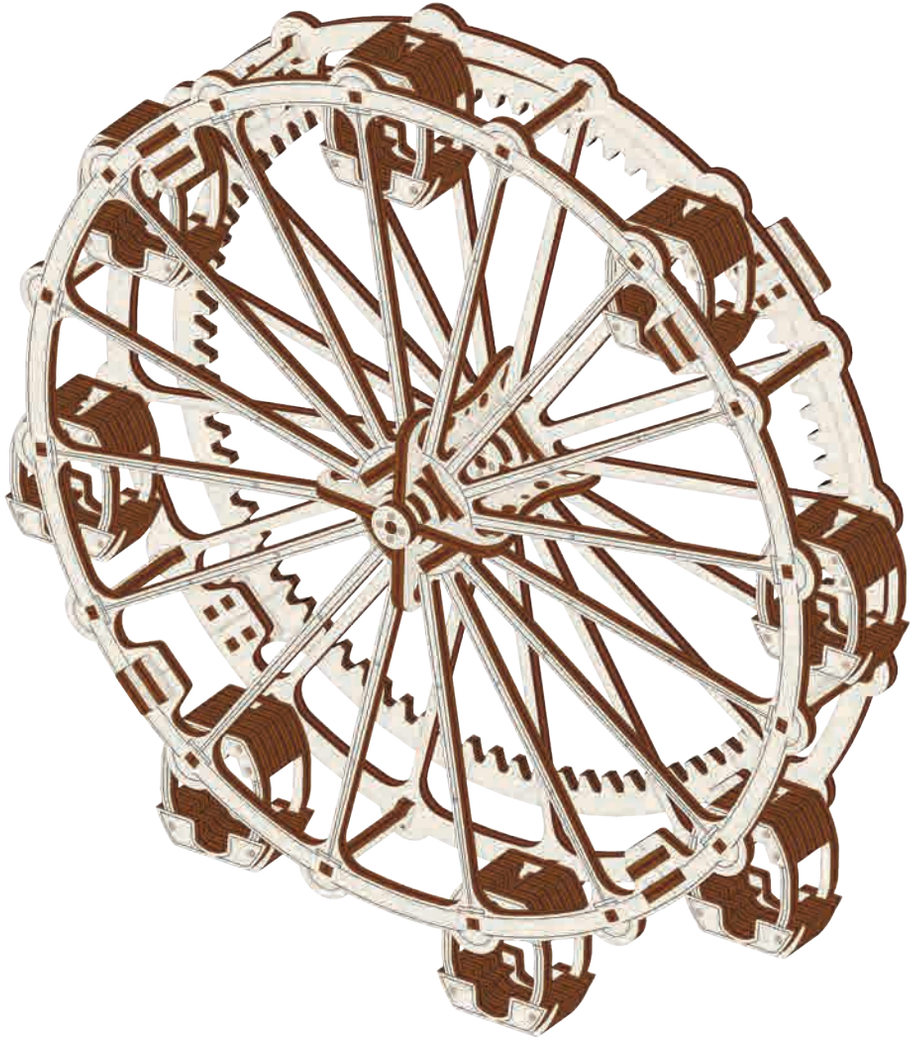

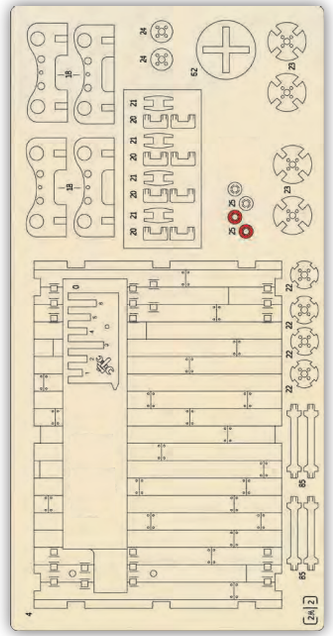

2

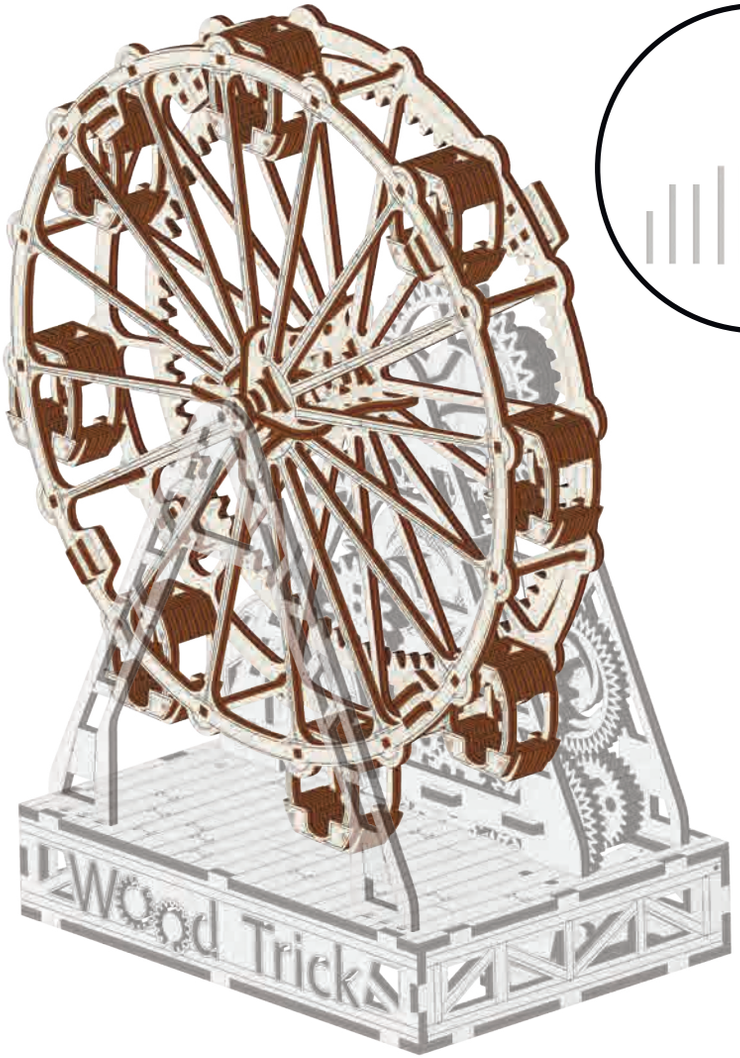

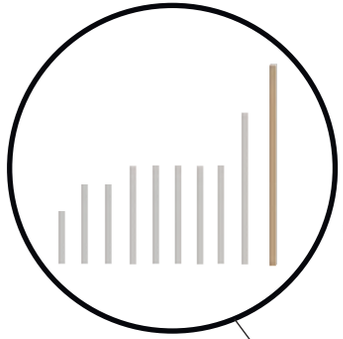

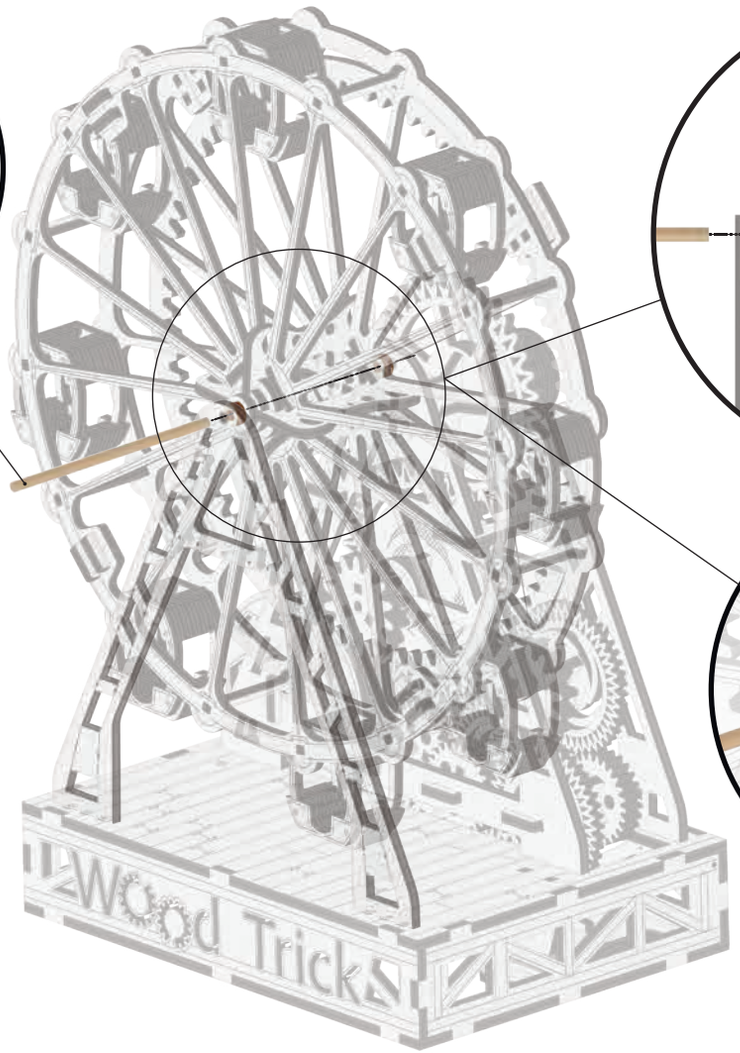

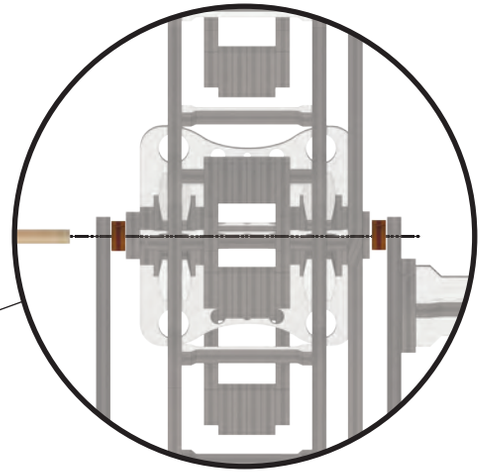

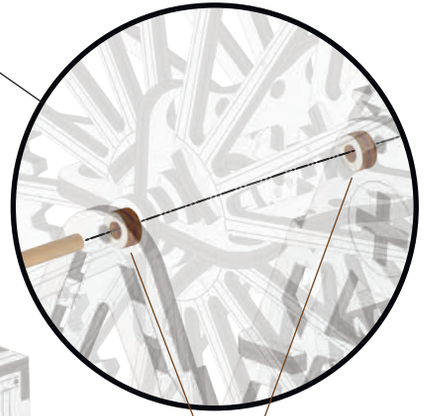

25

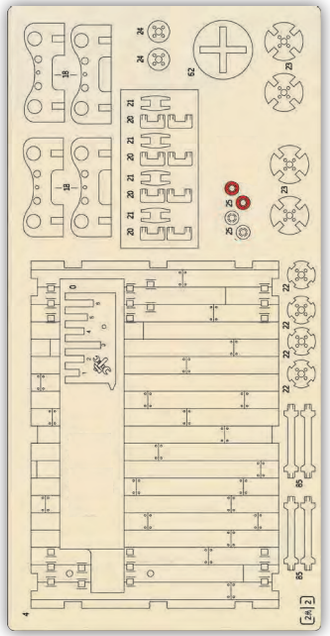

2

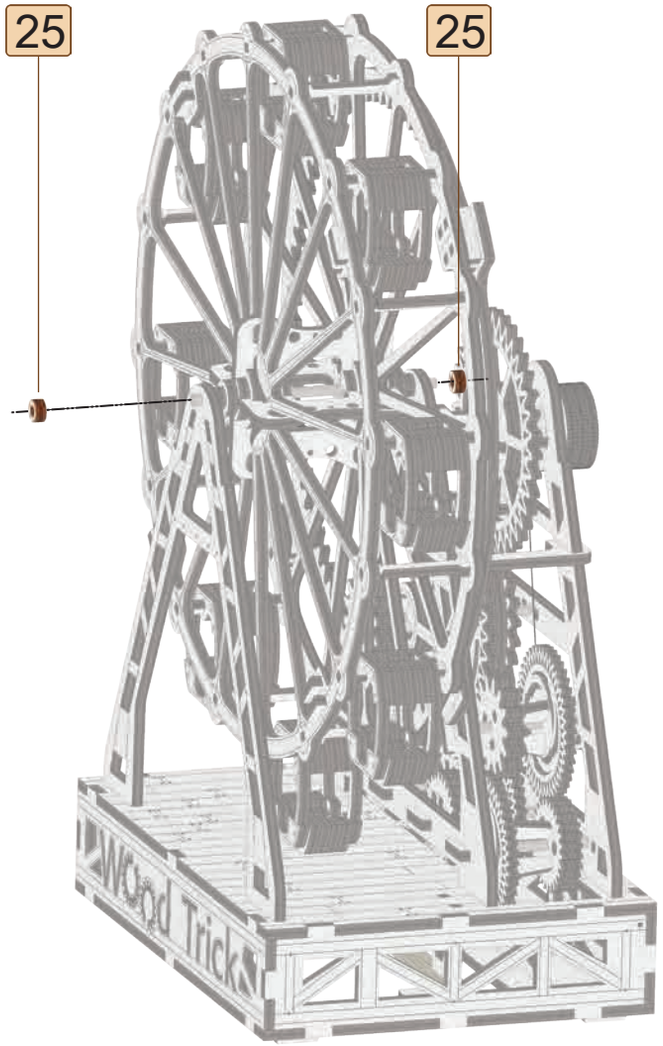

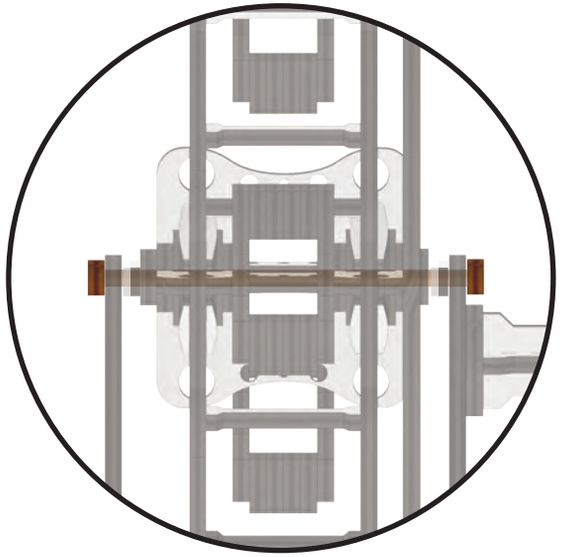

Wood Trick
Wood Trick
Wood Trick
Wood Trick
MONEY BOX
MONEY BOX