1/24 Racing Series Plastic Model kit

Ford Sierra Cosworth 4x4 Gr.A 1992

Read before assembly

- Not suitable for children under 14 years .
- Contains small parts .
- A supervising adult should read the instructions if a child assembles the model .
- Carefully study the instructions and perform a test fit before final assembly .
- Do not use cement or paints in enclosed areas or near sources of flames .

Paints required

FSC - Firescale
ZP - Zero Paint

FSC245 / TS8 Red
FSC244 / ZP1033 Blue
FSC246 / TS26 White

Tamiya (TS-X-XF-LP):

TS8 Red			
TS17 Gloss aluminium	X11 Chrome Silver	X31 Titanium gold	
TS26 White	X14 Sky blue	X32 Titanium silver	
TS30 Silver Leaf	X15 Light green	XF1 Flat black	
TS71 Smoke	X18 Semi-gloss black	XF7 Flat red	
TS100 Semi-gloss bright gun metal	X19 Smoke	XF16 Flat aluminium	
X2 White	X21 Flat base	XF56 Metallic grey	
X6 Orange	X23 Clear blue	XF59 Desert yellow	
X7 Red	X26 Clear orange	XF93 Light brown	
X8 Lemon yellow	X27 Clear Red	LP39 Ivory gloss	

Tools needed for assembly :

- Tweezers • Nippers • Drills • Files • Modeler's knife • Scissors
- Paper finishing abrasive • Masking tape • Plastic cement • Decal softener

How to apply decals :

1) Cut out the decal into the desired shape and clip the decal in water/hot water over 10 seconds.
2) Pull the decals sheet and put it on a sponge sheet or tissue paper to absorb extra water.
3) Hold the edge of decal sheet and slide it gently on the desired position.
4) Apply a little water to your fingertips and adjust the decals with a little shift.
5) Press out the extra water and air bubbles with a soft cloth or a cotton bud.
6) Be careful not to touch the decal until it is dry completely.

*1 Use a steamed towel or a decal softener to smooth the surface.

*2 Test before using clear coating.

Icon Definition

Don't glue
1.1 Drill hole .mm Diameter
x2 Make 2 pieces
Choice
74 Decal
S3 Stencil
+ And
/ Or
Cut with scissors
Same for other side

Chassis assembly

E10

E08 X7

I33

I32

I46
XF16

X7

E22 X18

XF1

I47
XF16

X18 E10
X31
XF16
X31
X18
X18

C01
TS26 / FSC 246

I33
I32
X7
XF16
X27 + X21

Front and Rear suspension assembly

Underside assembly

C02

I39
XF56
+
X21

X18

E03
TS17

C02
X31
X18
XF56 + X21
X18
X31
X18

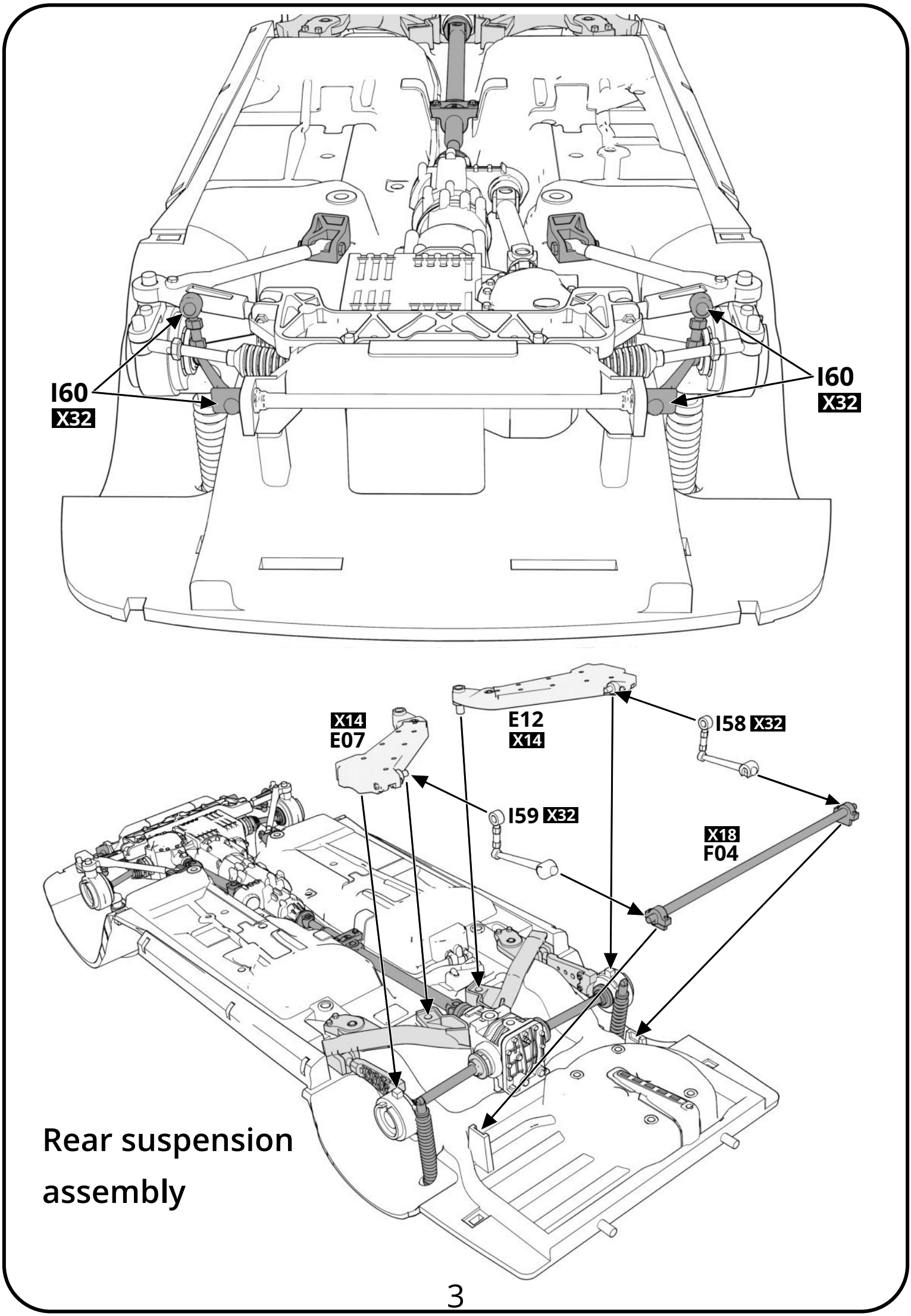

Rear suspension assembly

Brake disks assembly

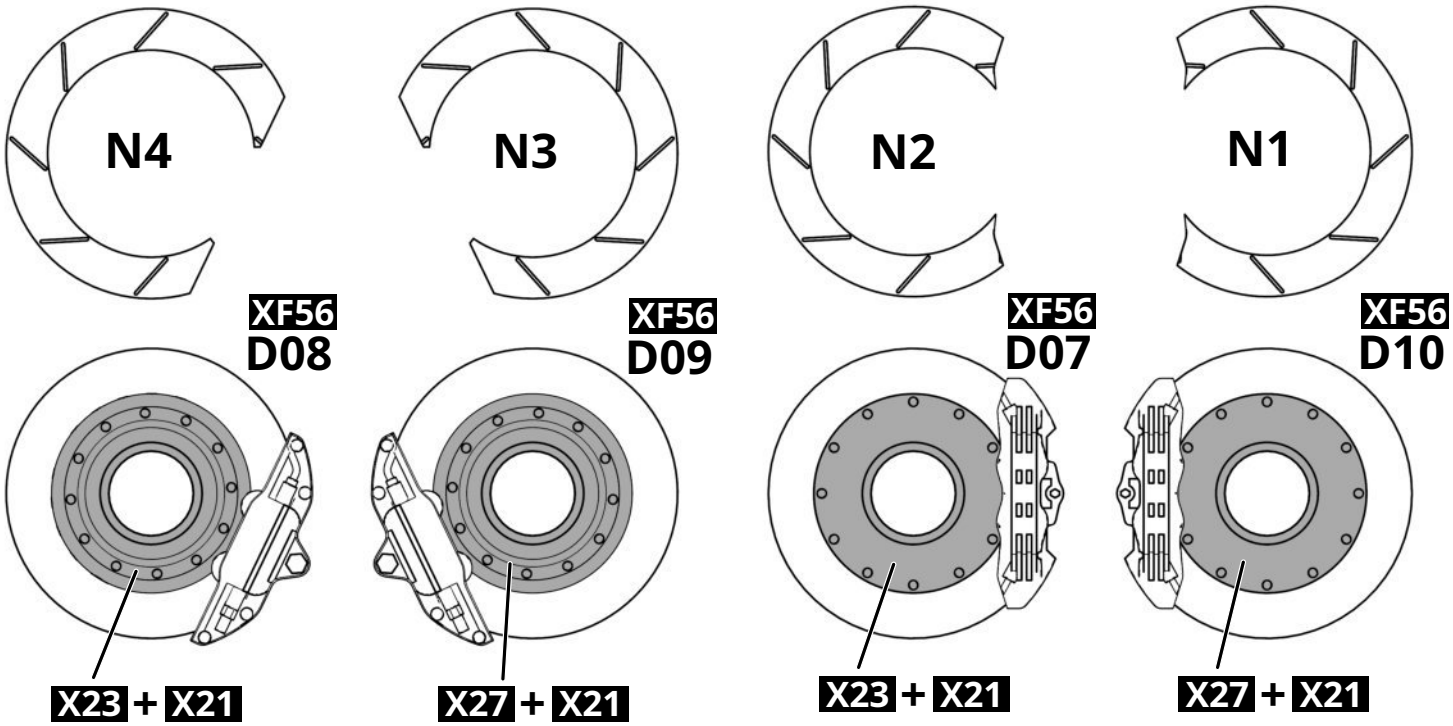

Brake disks attachment

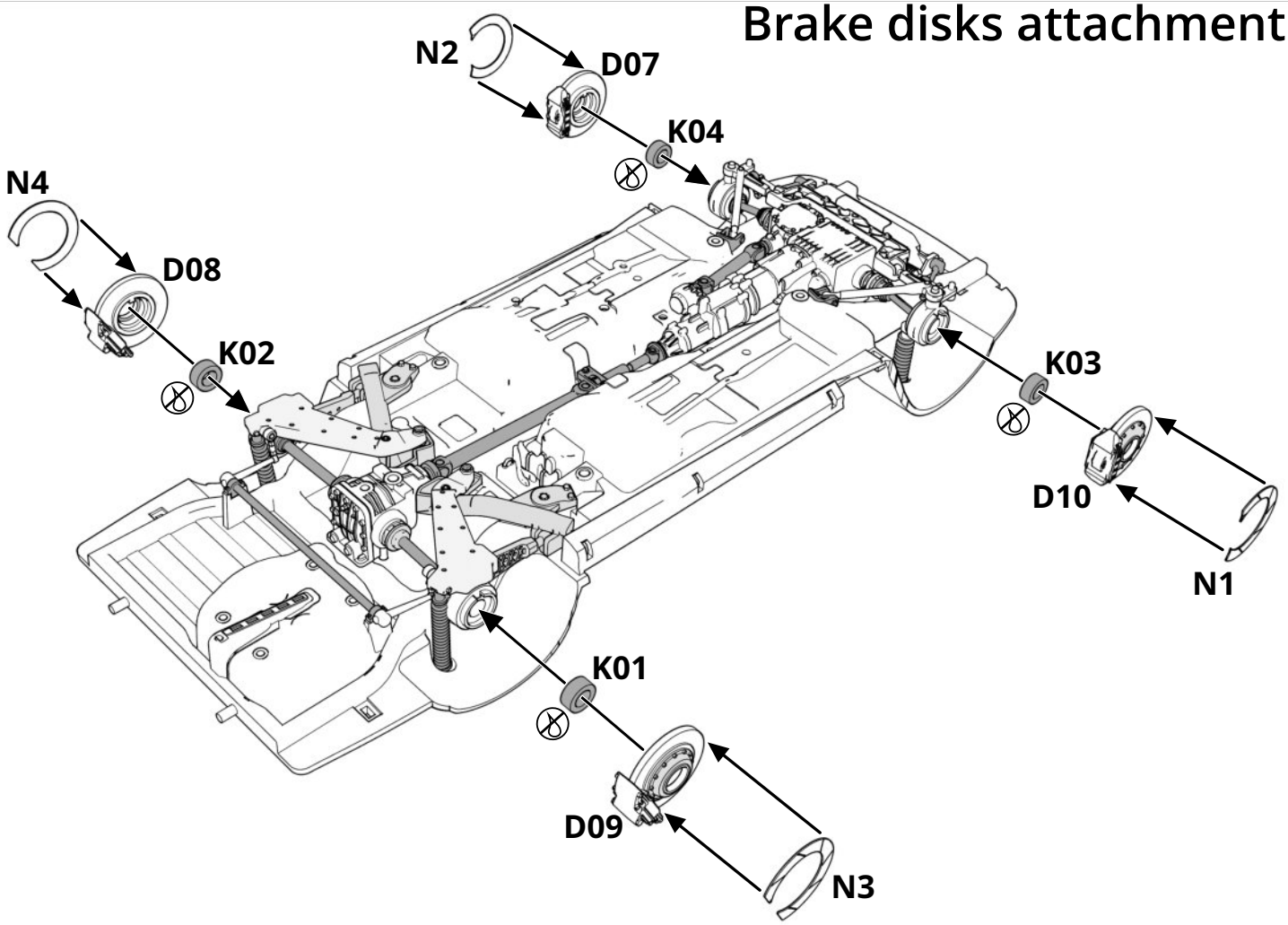

Tires assembly

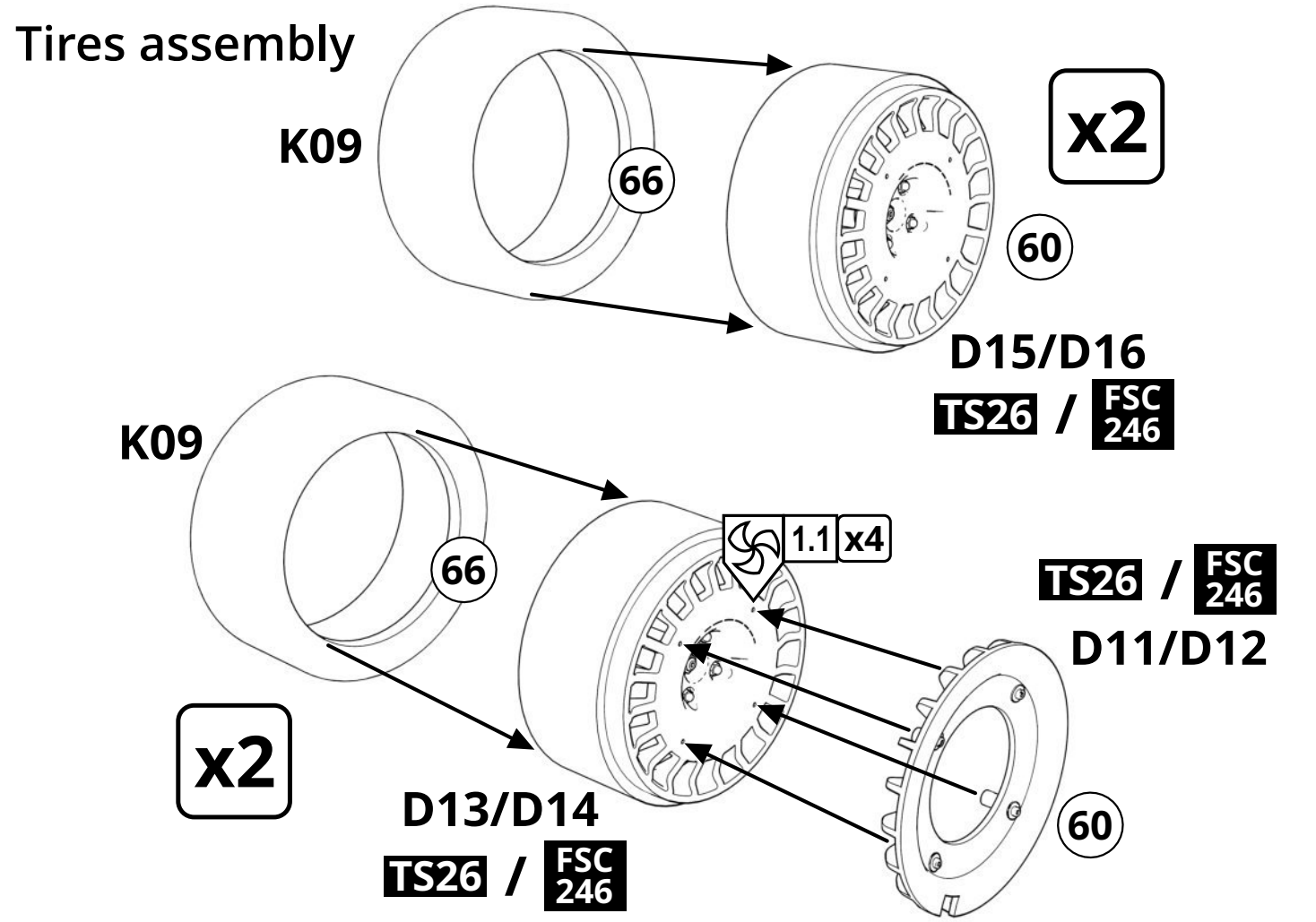

Attaching Wheels

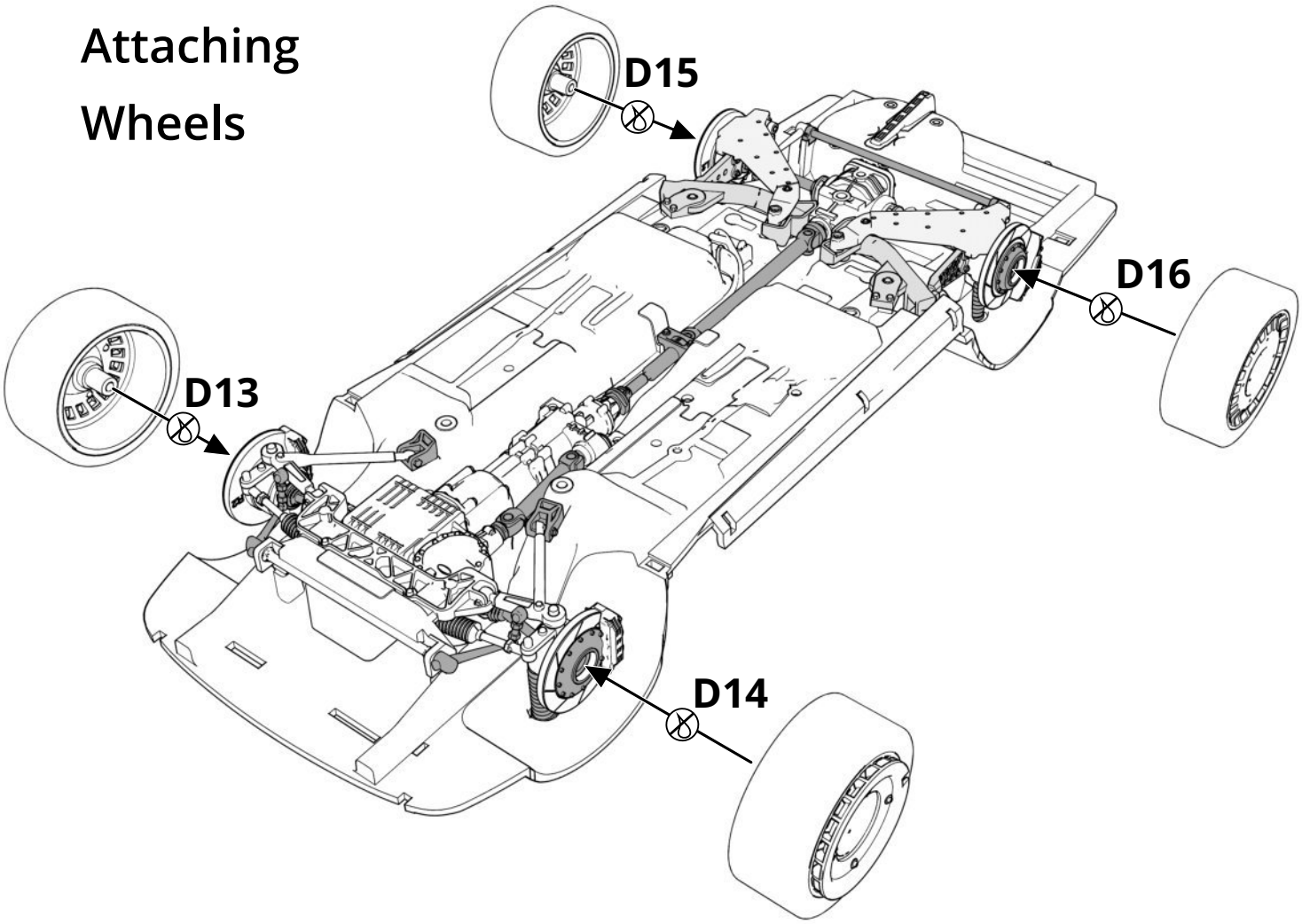

Interior assembly

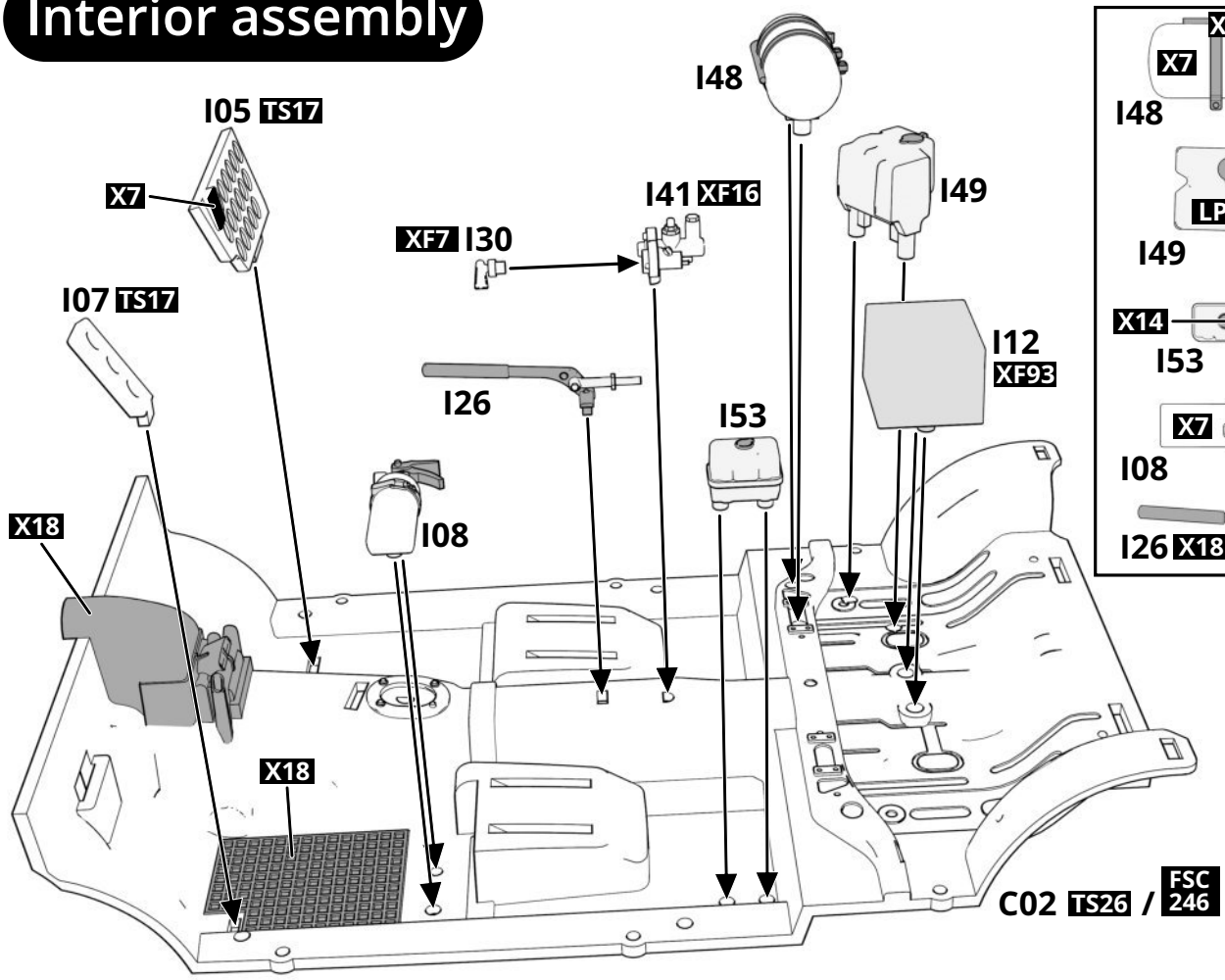

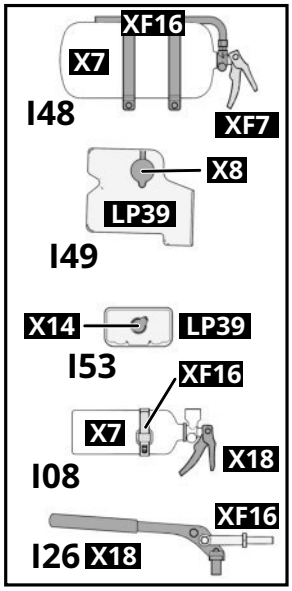

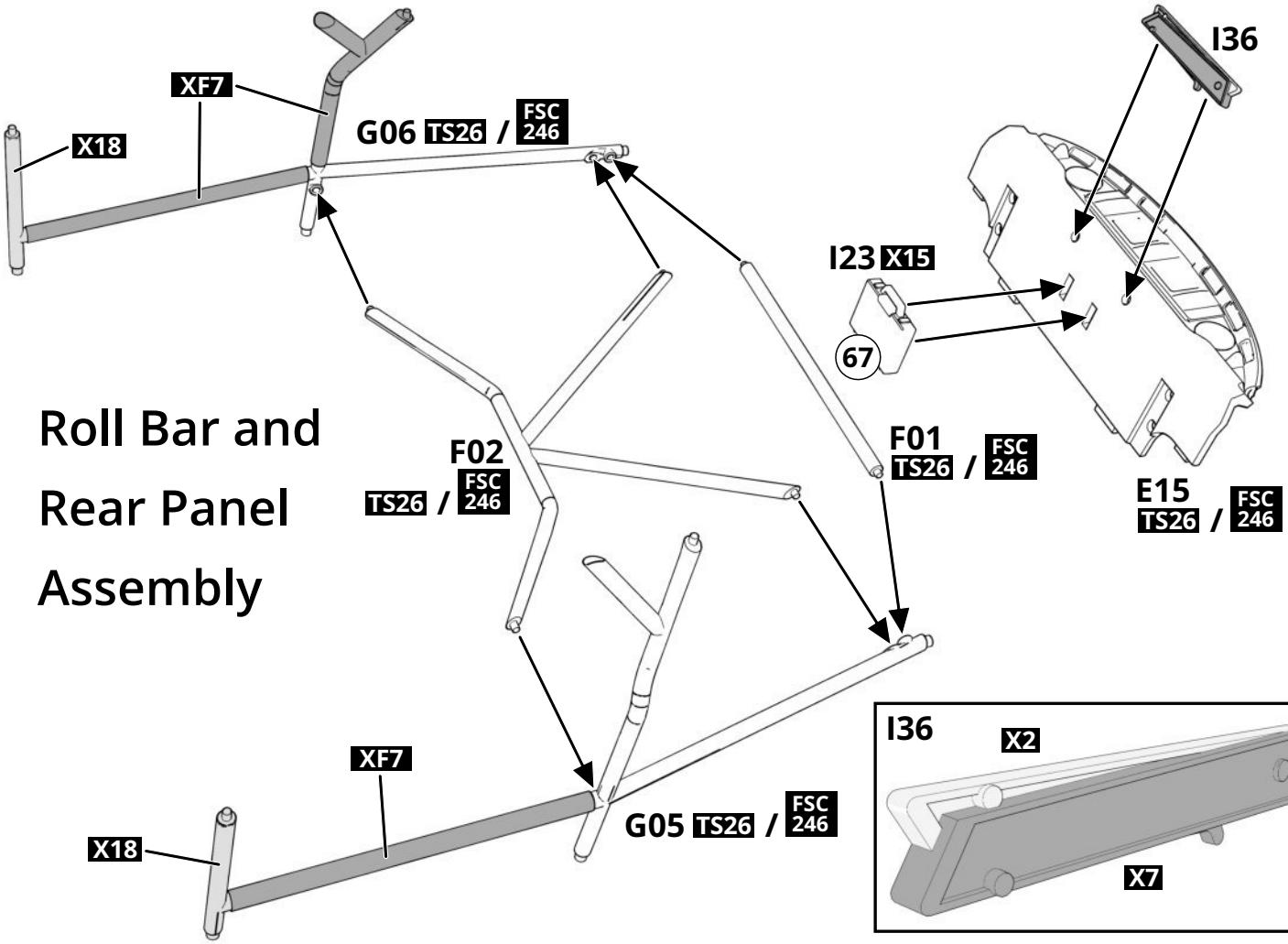

Roll Bar and Rear Panel Assembly

Attaching Roll Bar

G06

E15

G05

XF16

C02

X18

X11

I18/21
X2

I16/19
X2

x2

Headset assembly

Seats assembly

E06
XF1

E05
XF1

52

T6

N17 X6

N15

T9

52

N13
X23 + X21

N13
X23 + X21

T8

Seats assembly

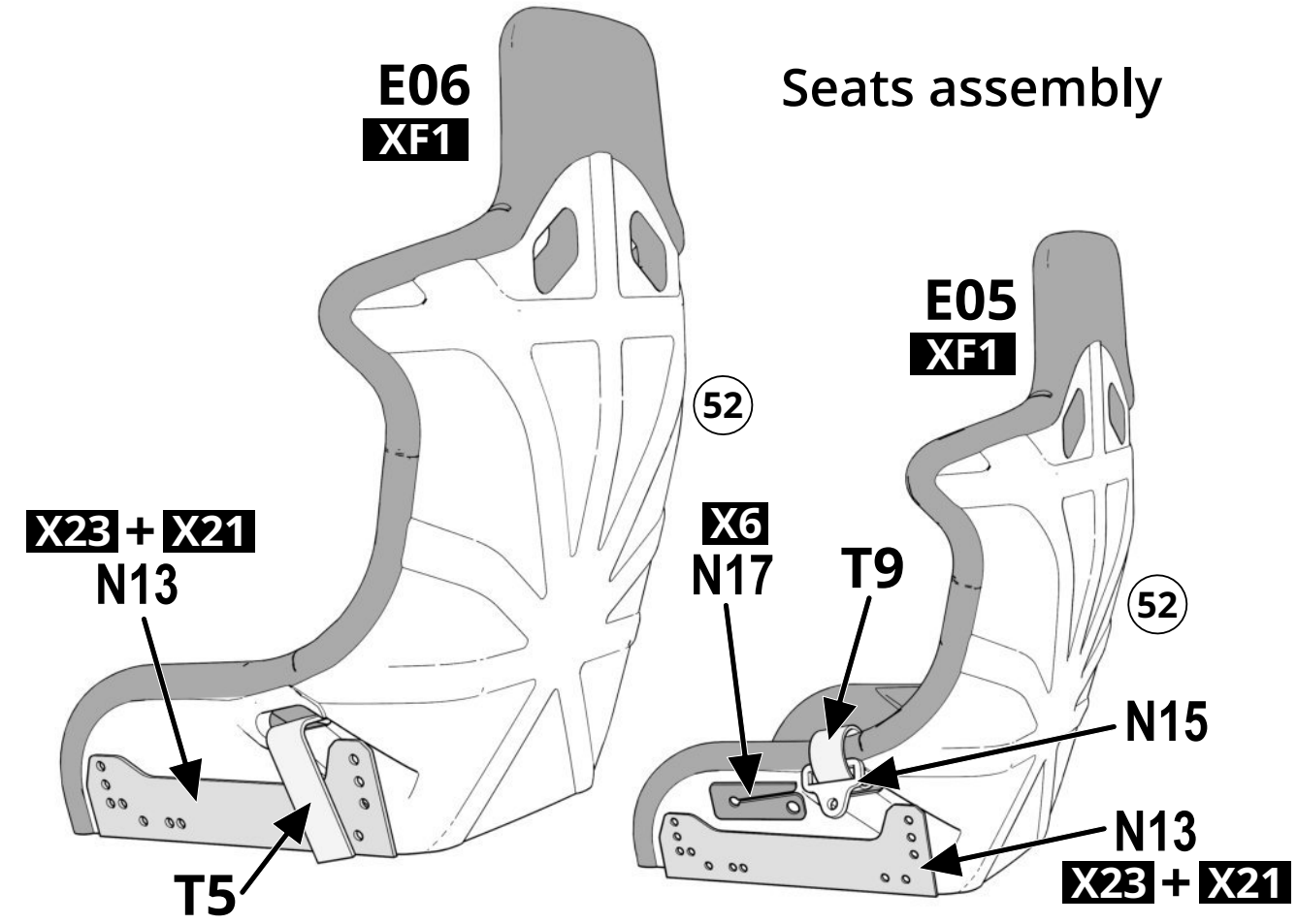

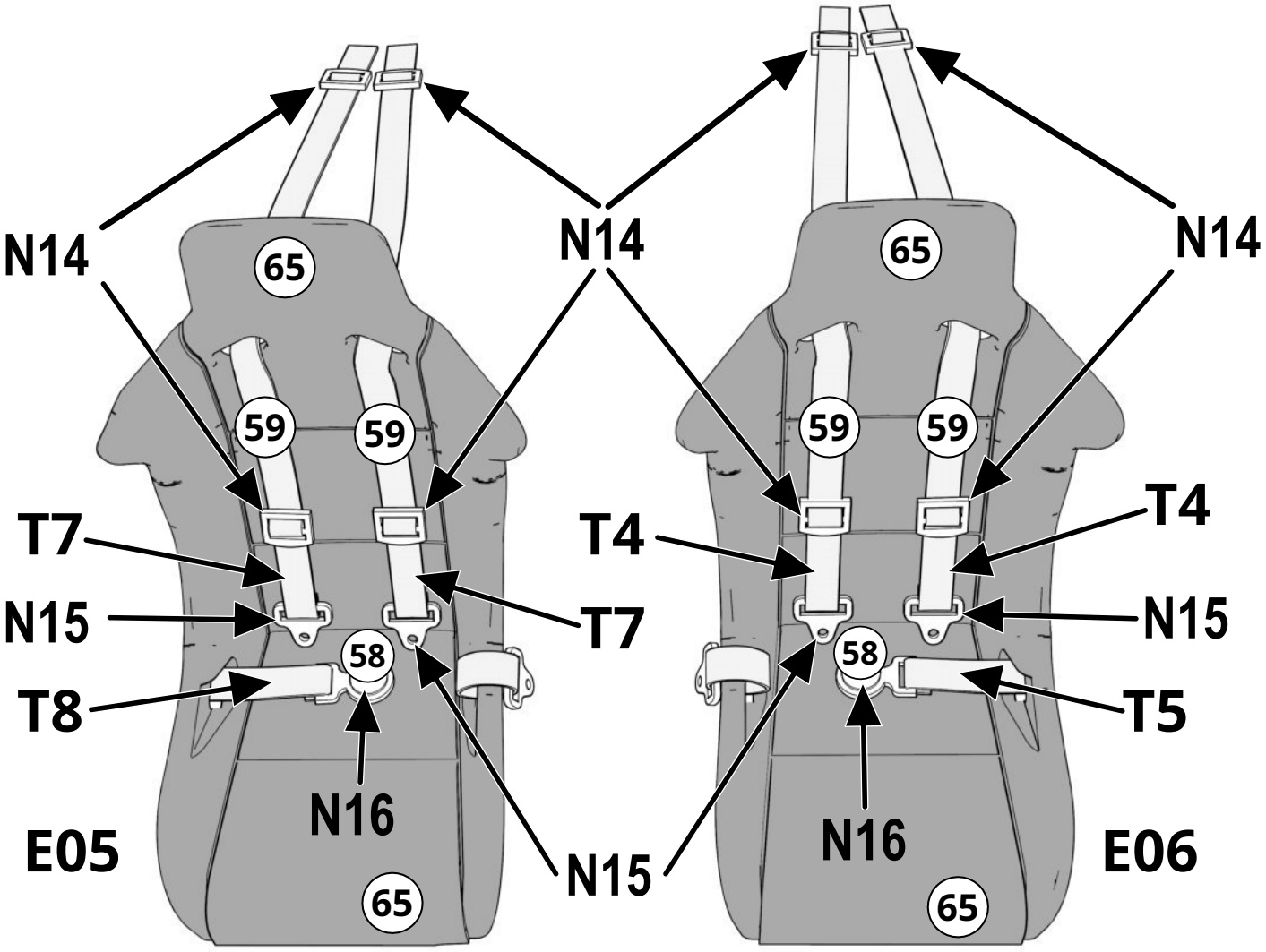

Attaching seats

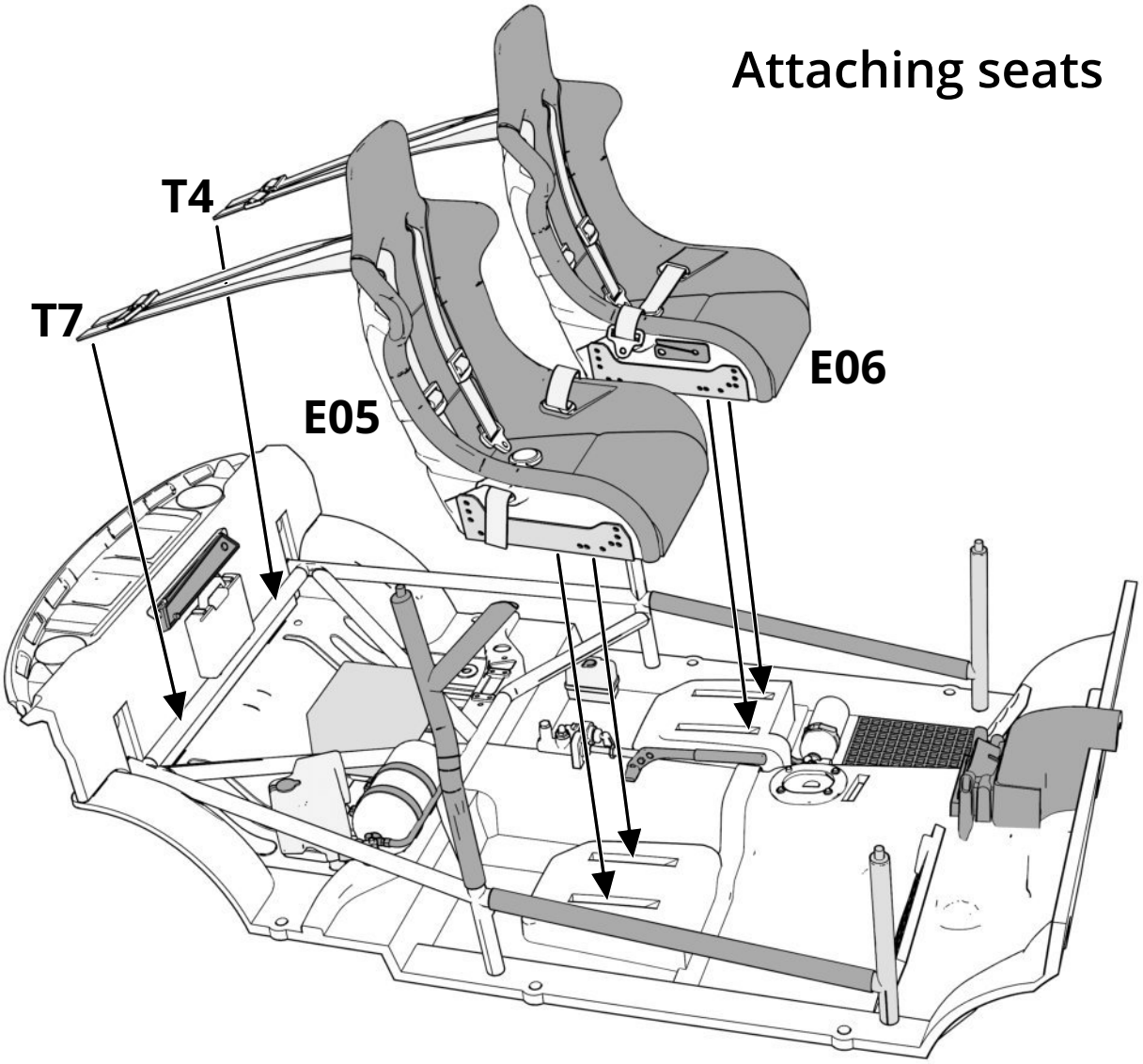

Steering wheel and Dashboard paint scheme

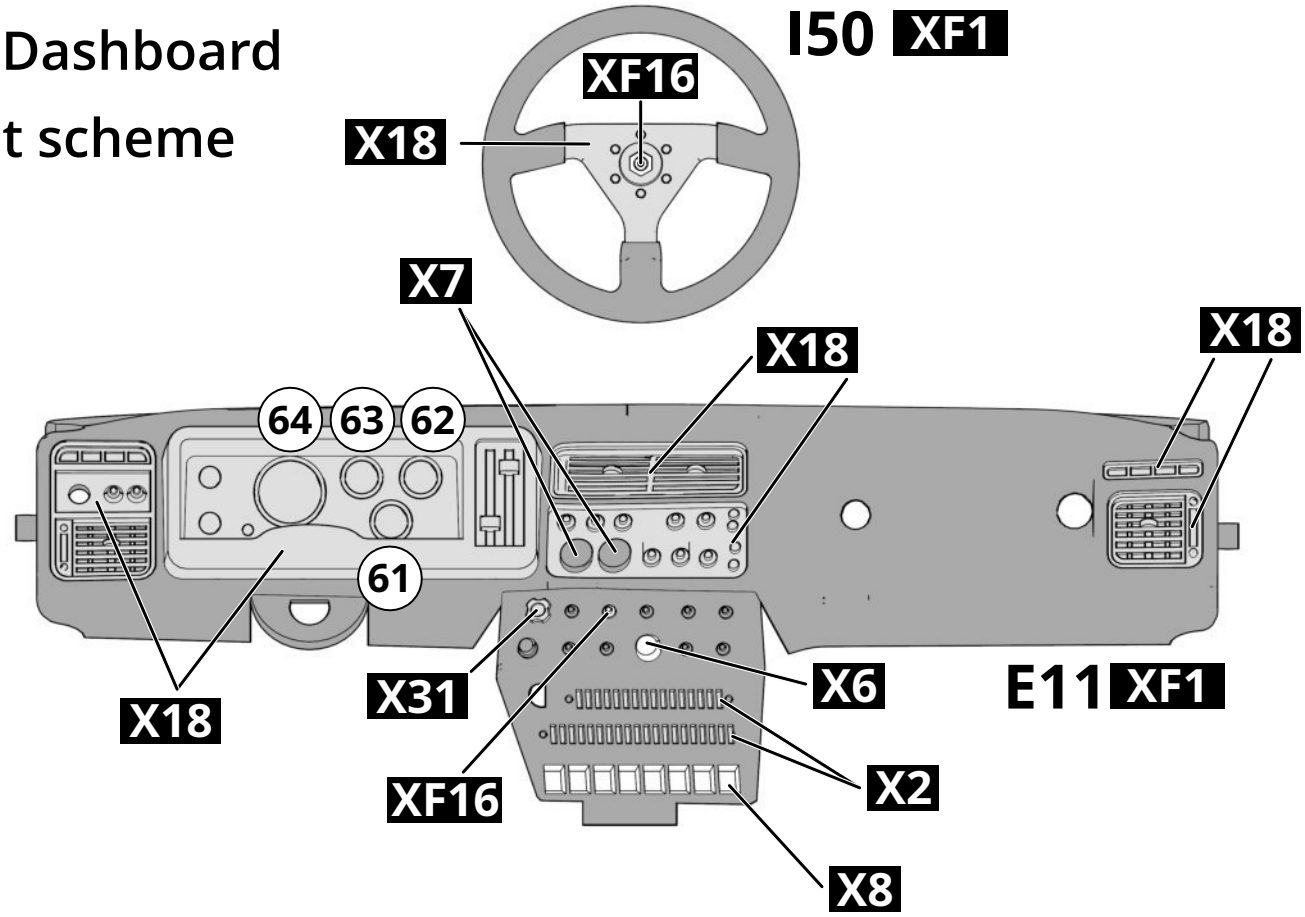

Dashboard assembly

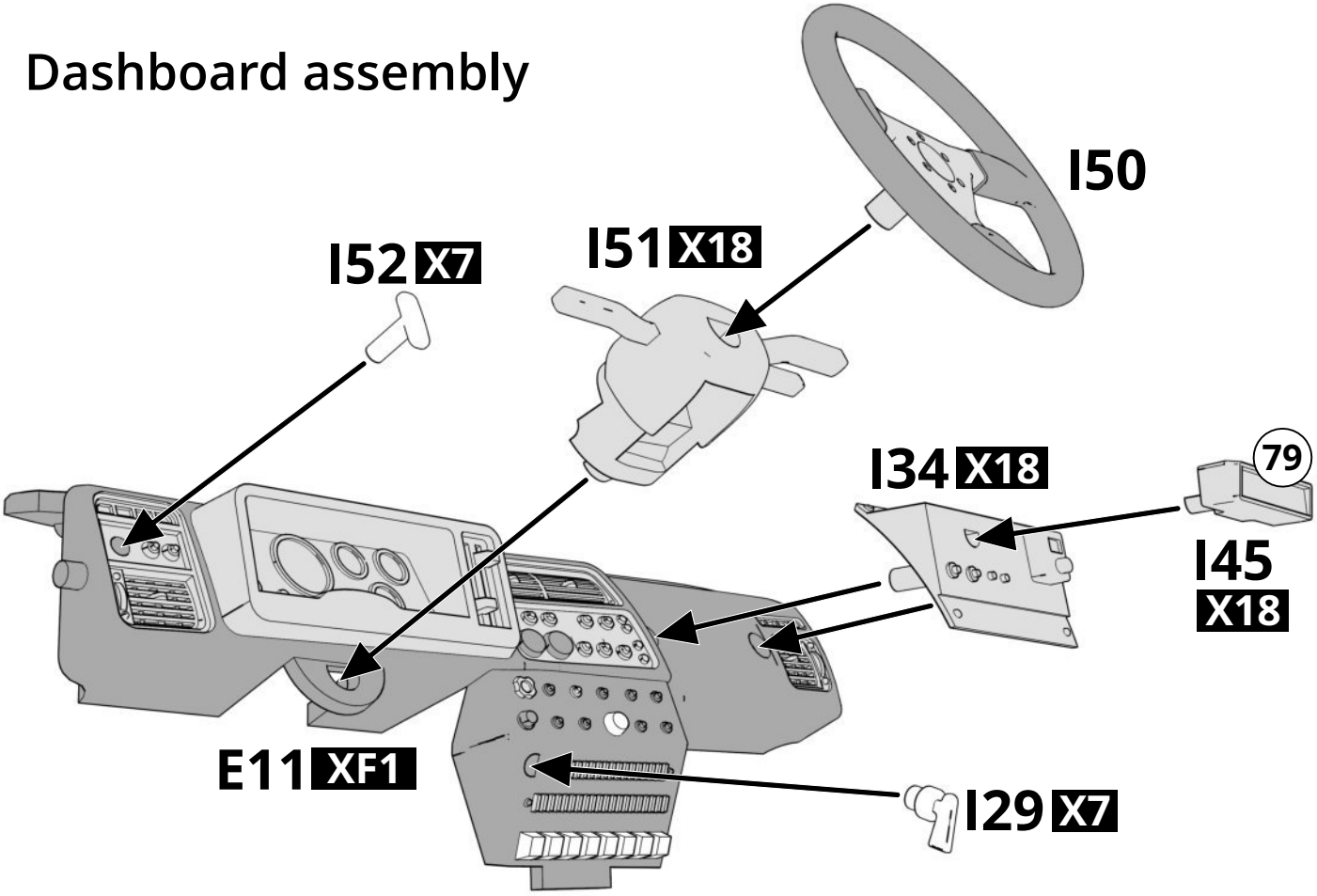

Attaching Top Roll Bar and Dashboard

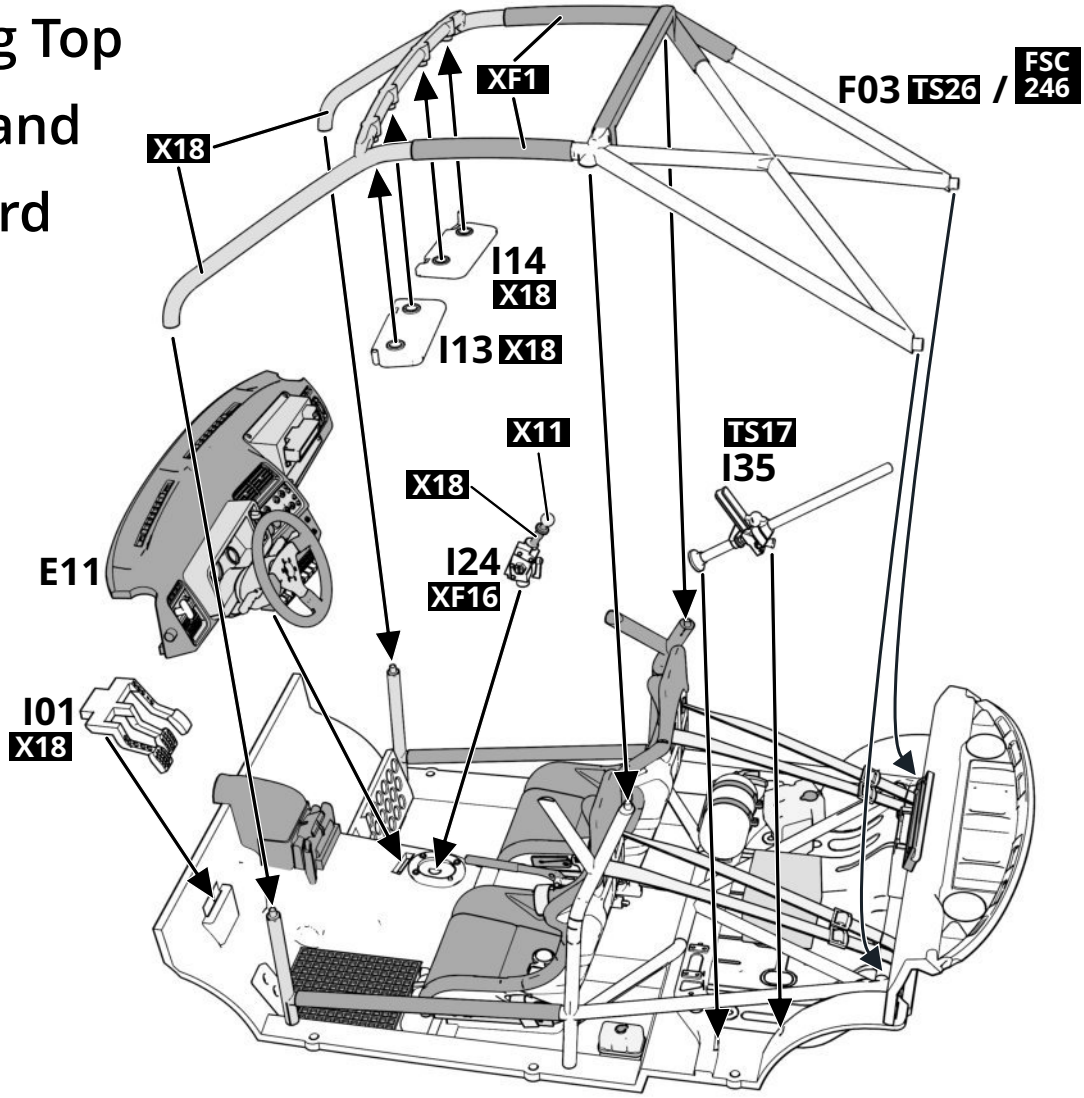

Attaching Side Panels

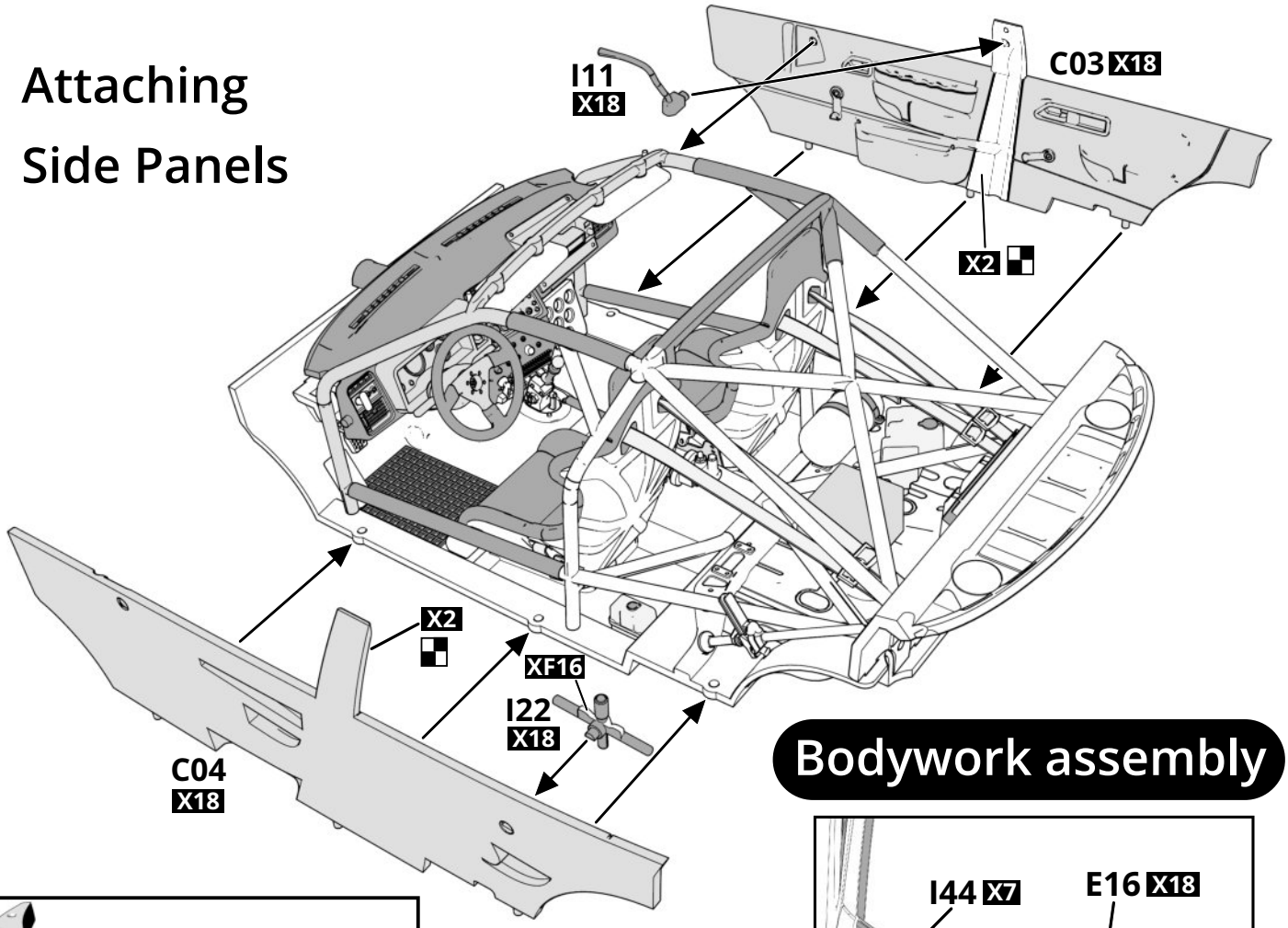

Bodywork assembly

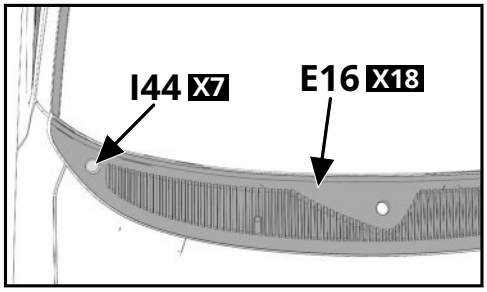

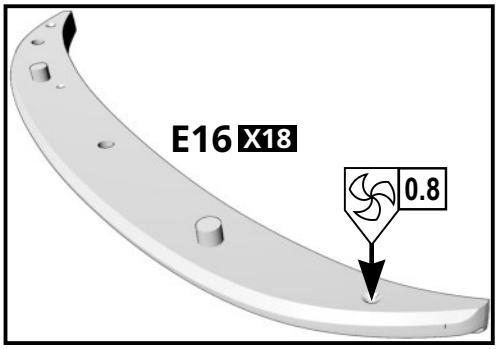

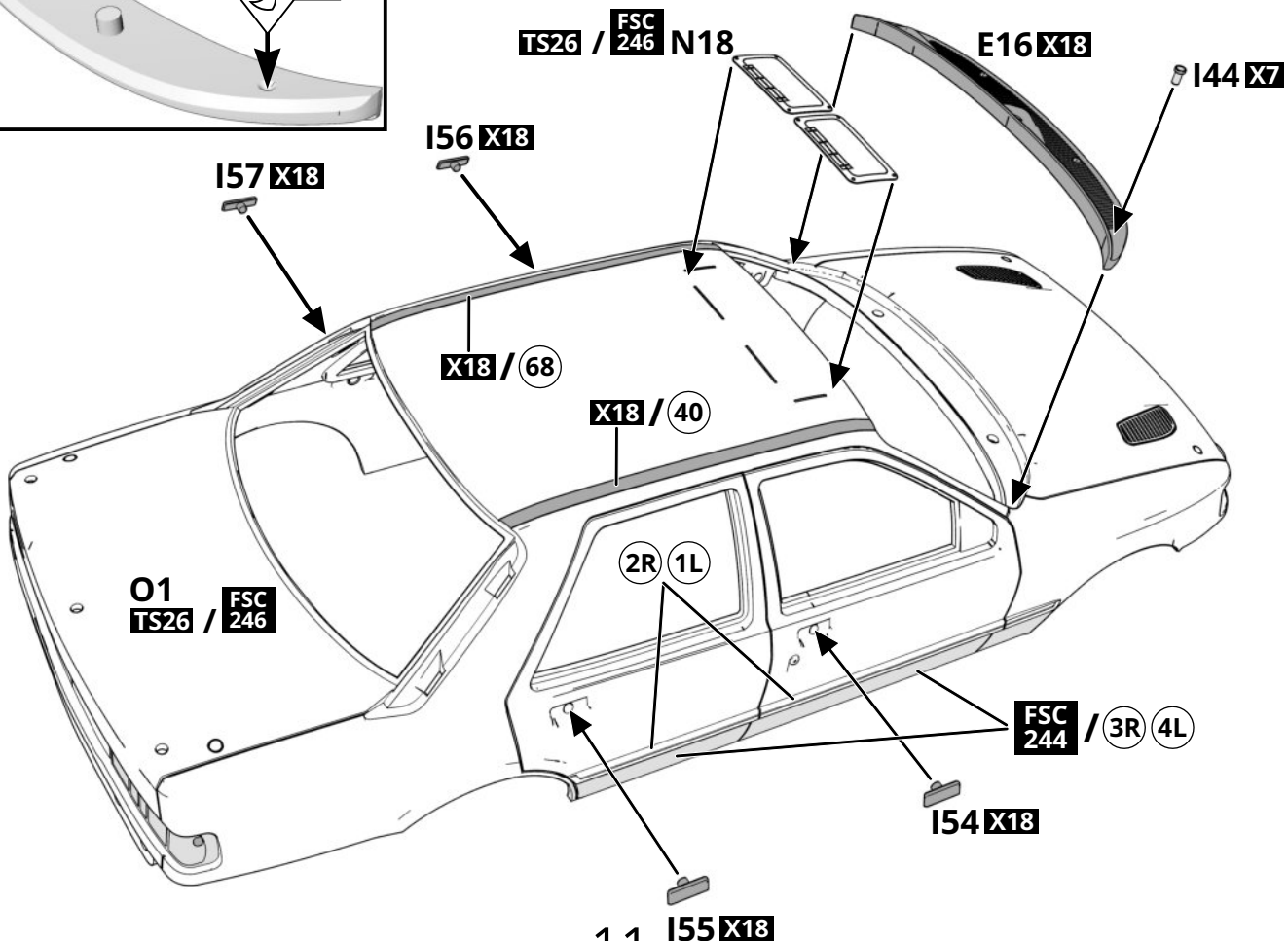

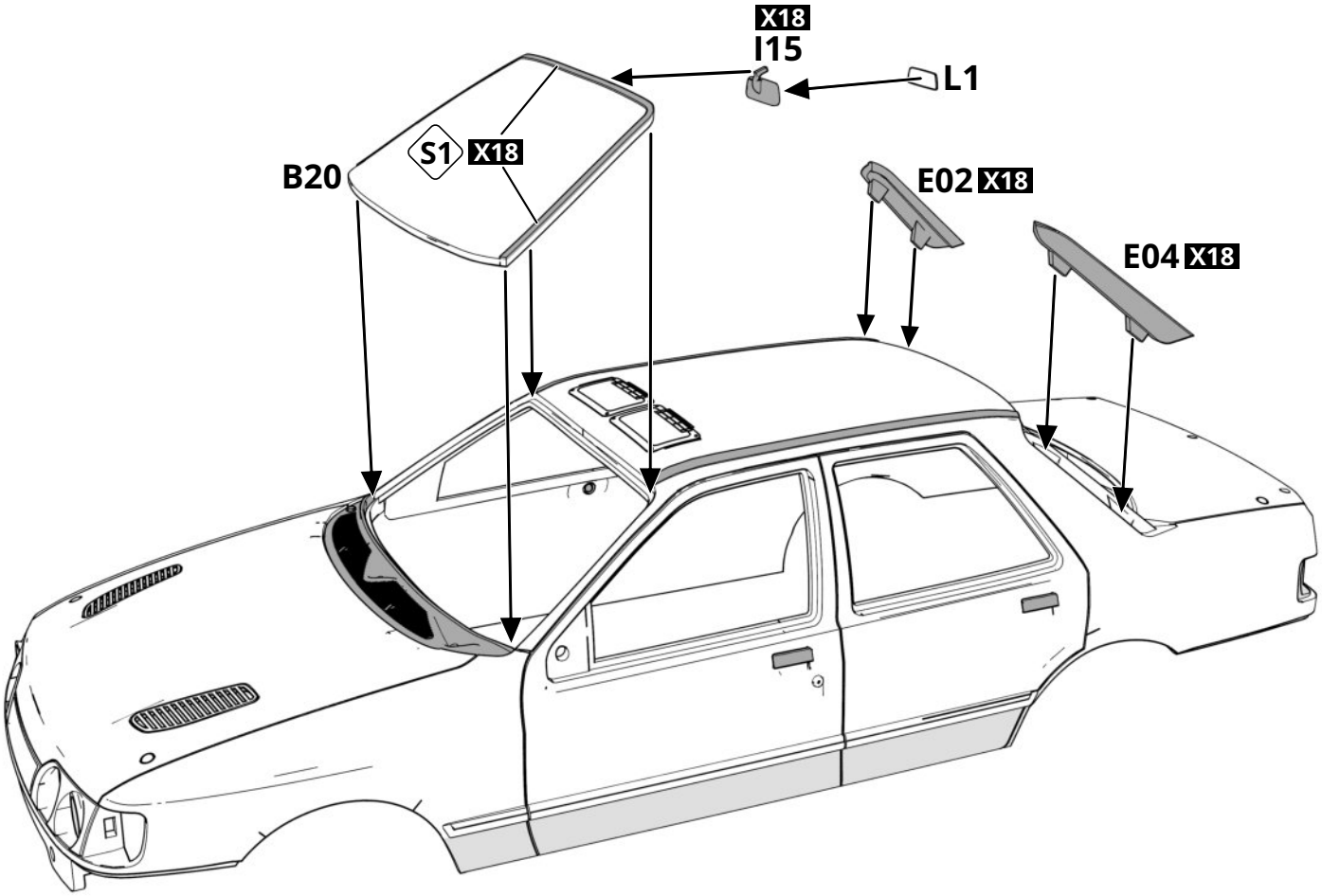

Attaching windows

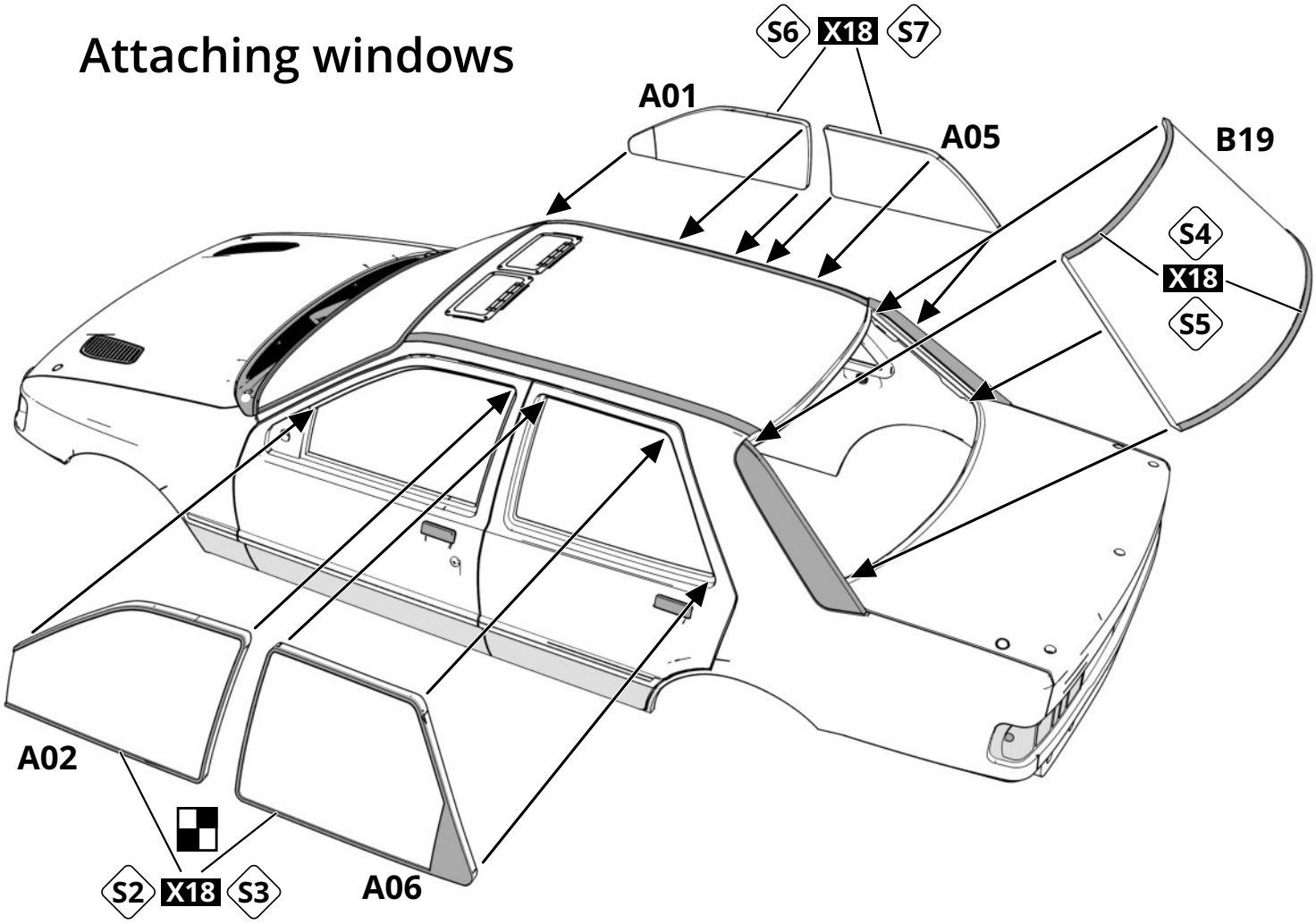

Front light assembly

N10
N09
X26
X11
X11
X26
J62
X11
J63
X11
N05 X18
A04
A12
A09
A10
A11
A03
#3 X14 / 28
#7 X7 / 27
I43 X2
29
#3 X14 / 28
#7 X7 / 27

Making holes for Top Antenna

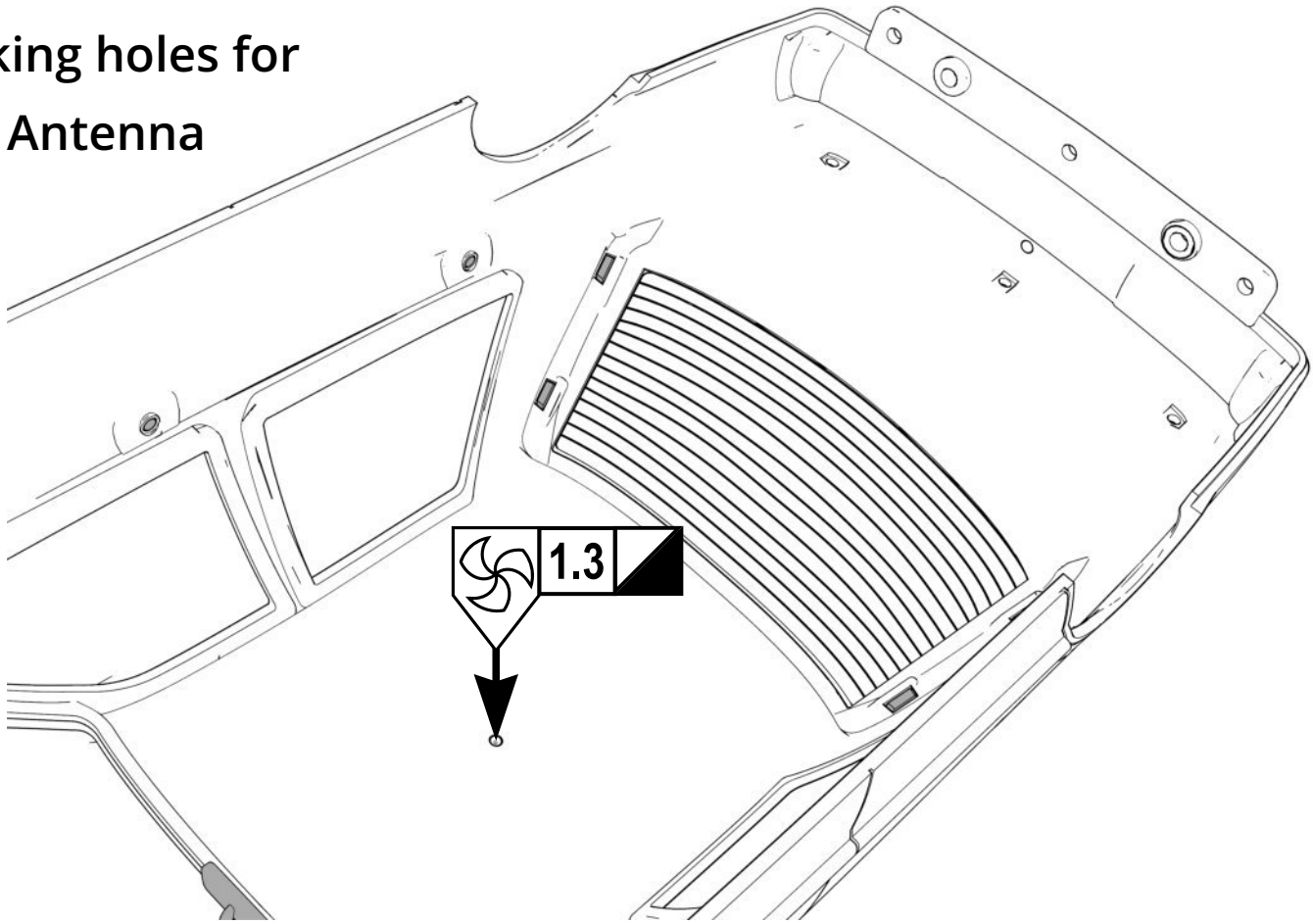

N11

X11

N12

X26

X26

N19

SIERRA

COSWORTH

N20

A08

A07

X27

X19 / TS71

X19 / TS71

X27

SIERRA N19

COSWORTH N20

Making holes for optional Headlights

1.6

1.6

General assembly

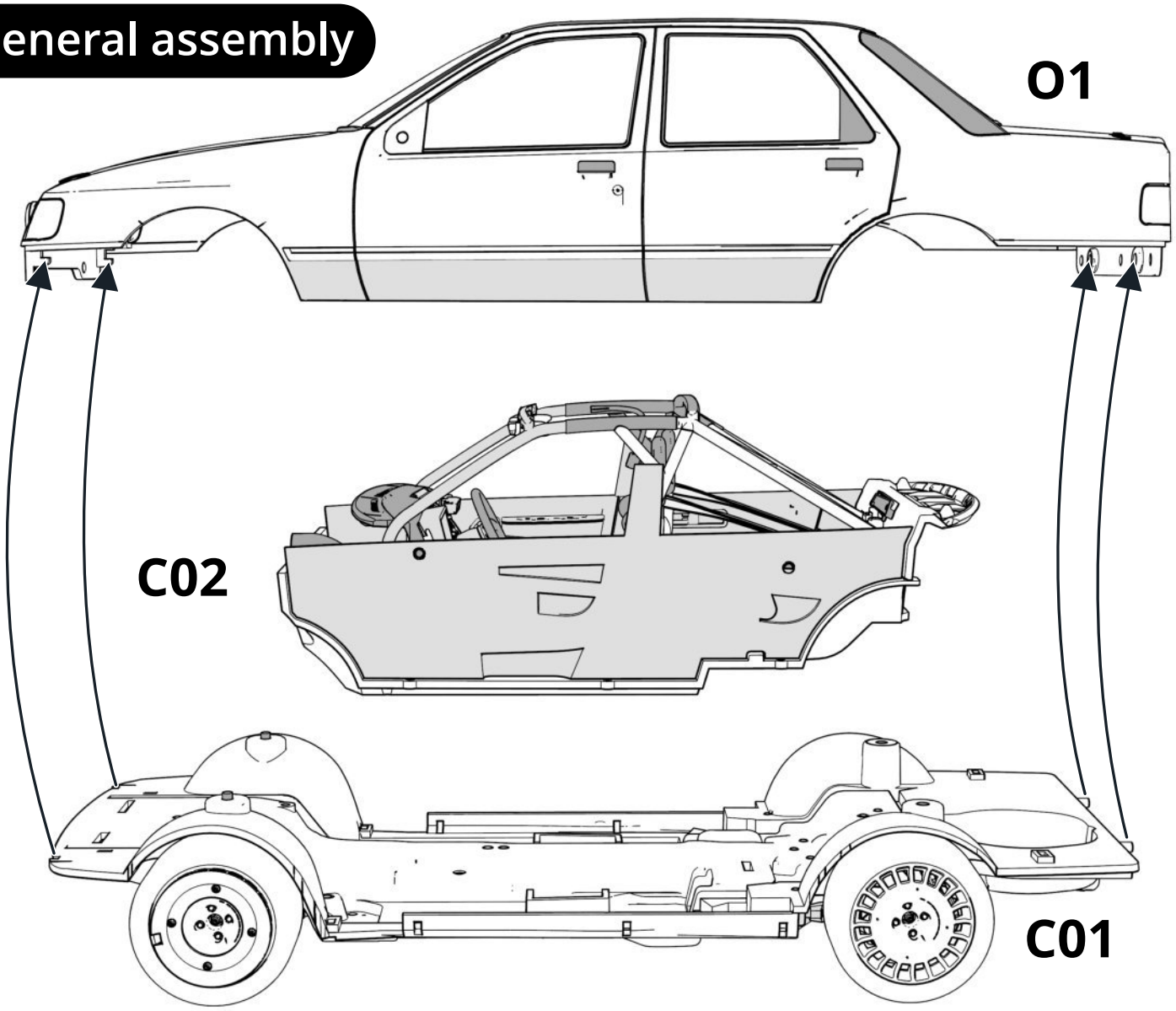

Attaching Radiator

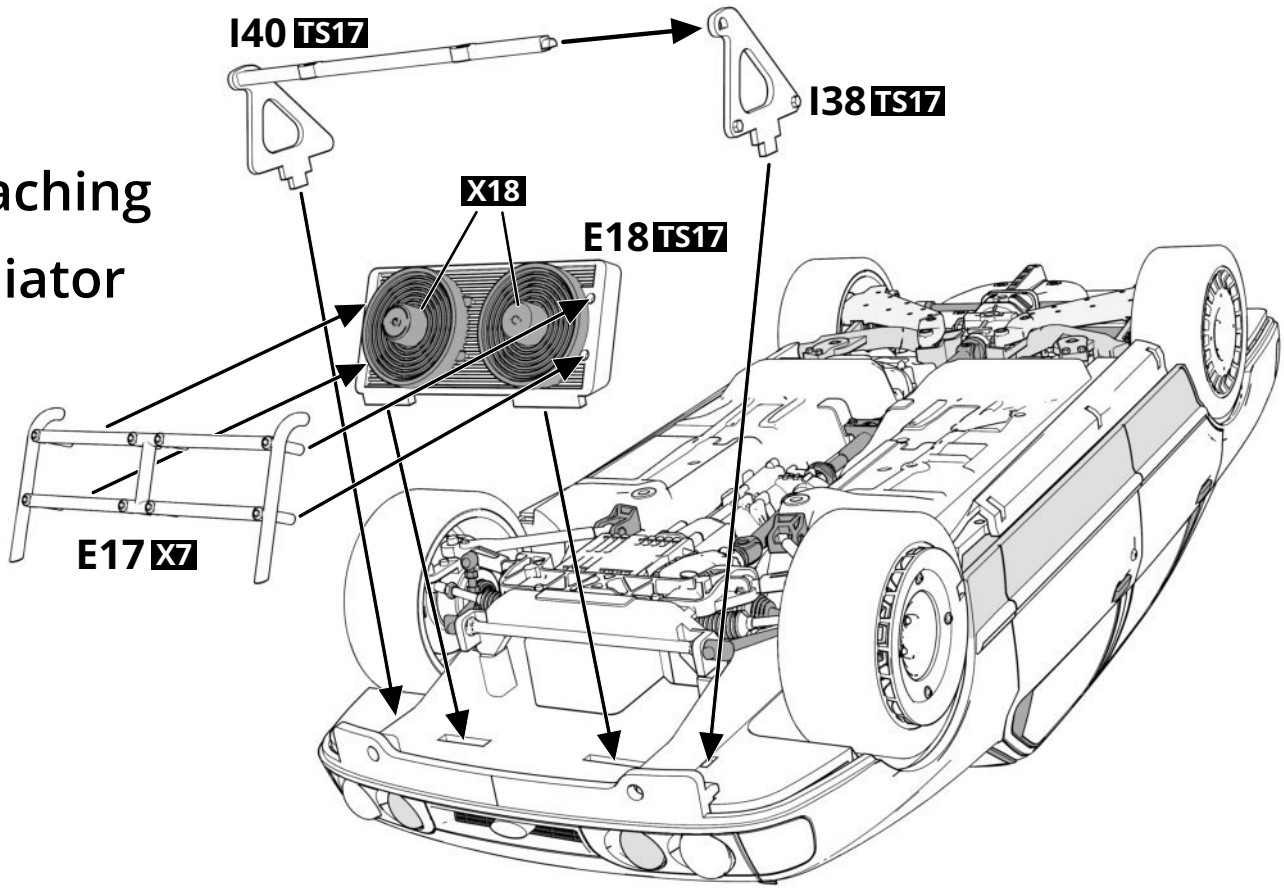

Front Bumper assembly

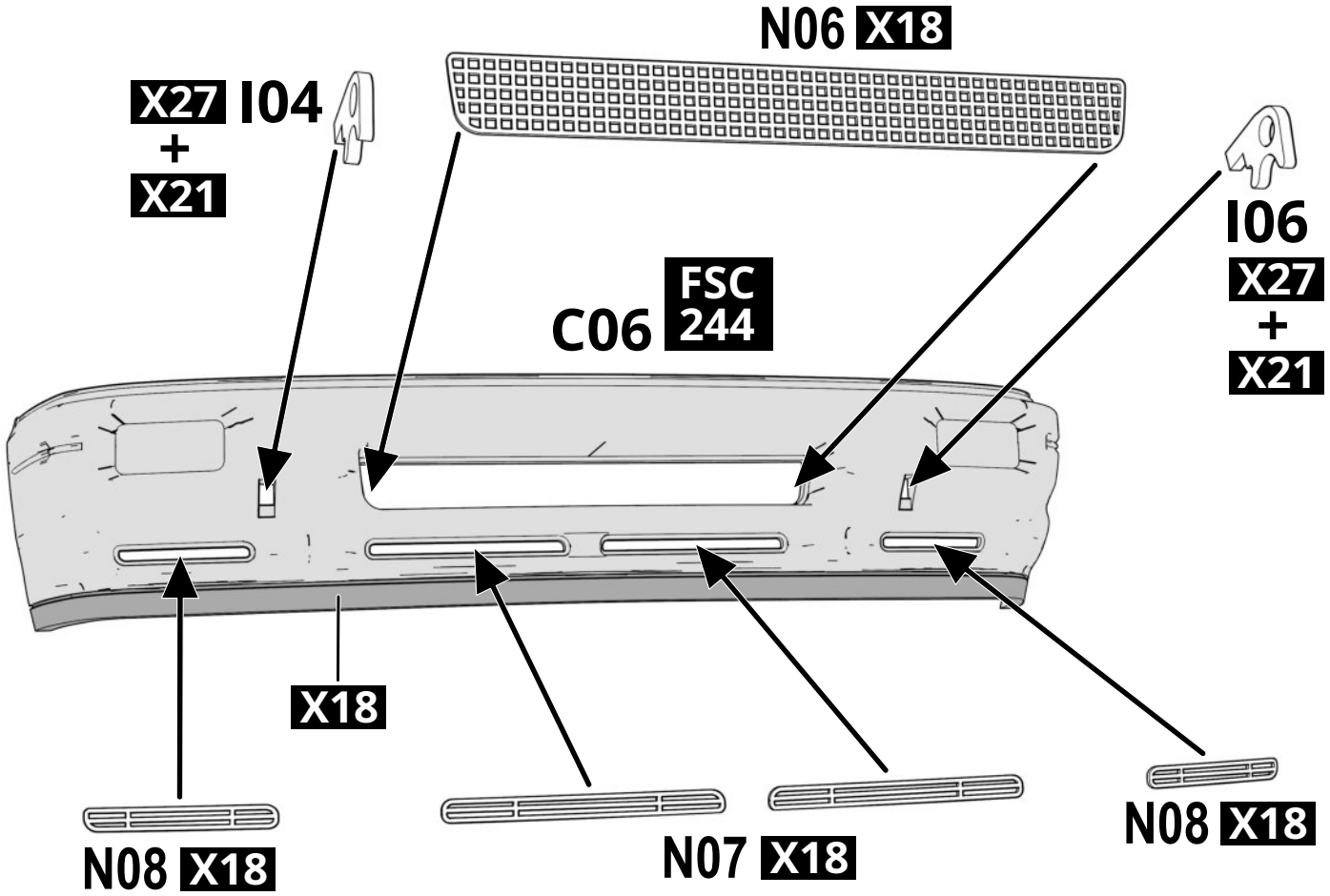

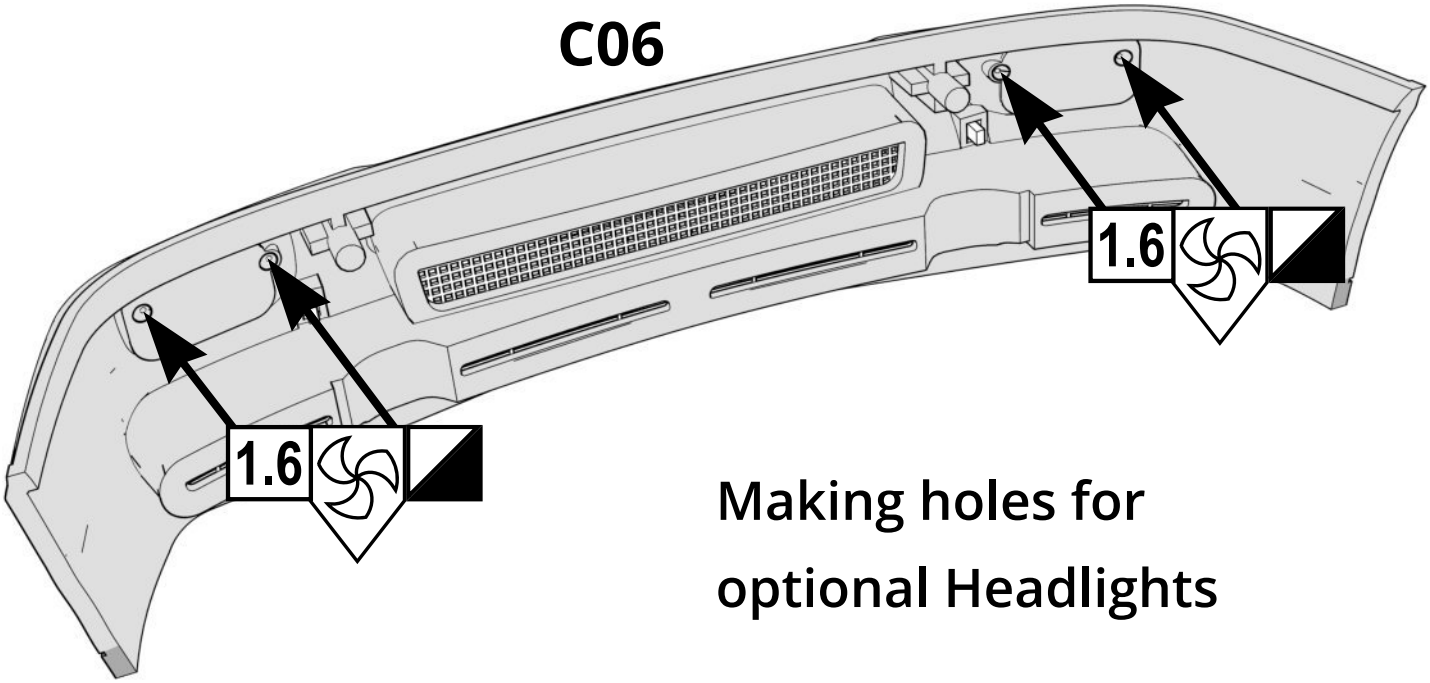

Making holes for optional Headlights

Attaching Front and Rear bumpers

C06 FSC 244

TS26 / FSC 246

X18 I27

I28 X18

X27 + X21 I03

C05 FSC 244

X27 + X21 I02

C05

0.6

0.6

Underside assembly

XF16

E01 XF59

I25 TS26 / FSC 246

I37 XF59

E20 FSC 244

TS100 E19

TS26 / FSC 246 I31

FSC 244 E21

Mudguards attachment

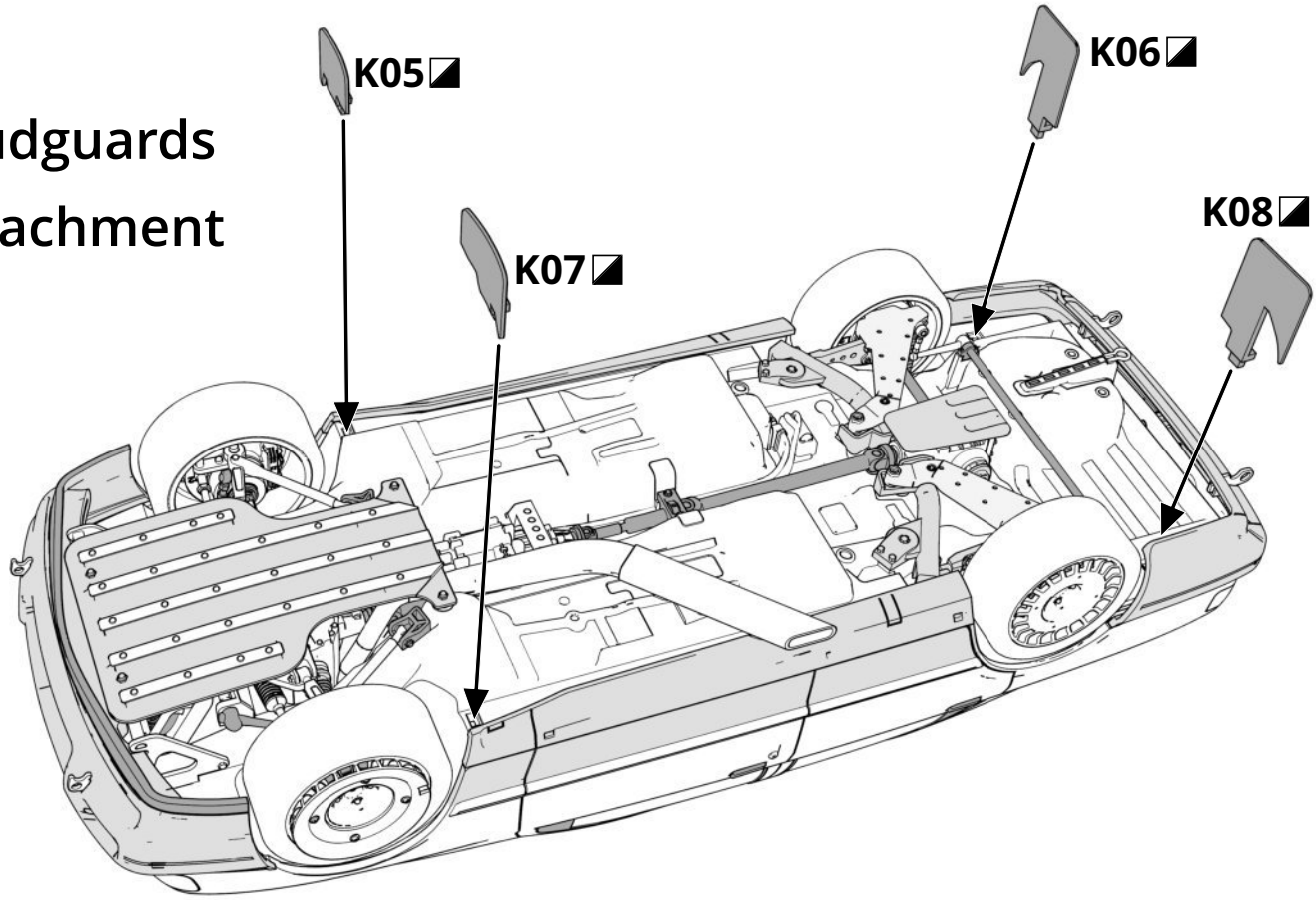

Front Bumper Extra lights assembly

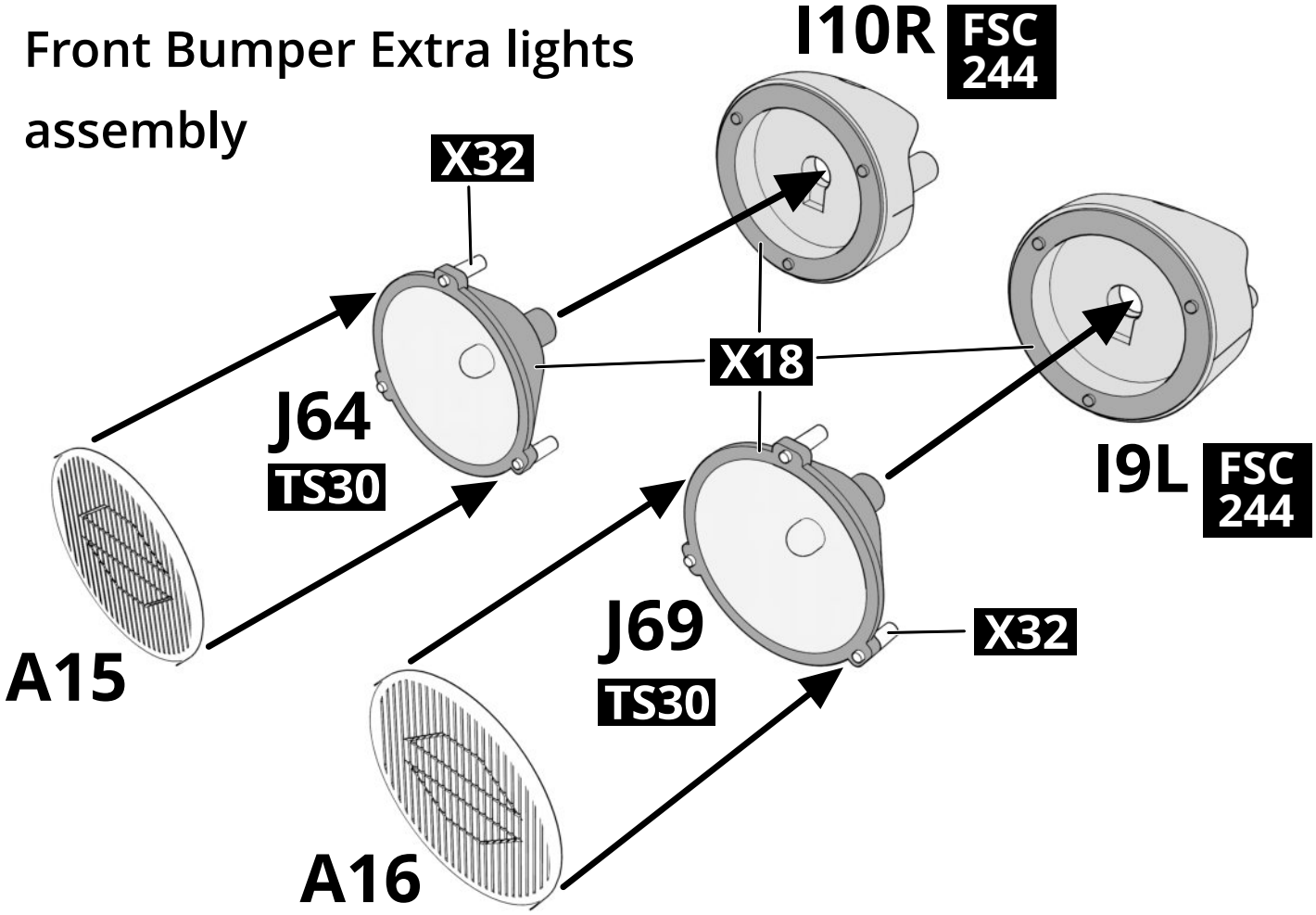

Front Bumper Extra lights attachment

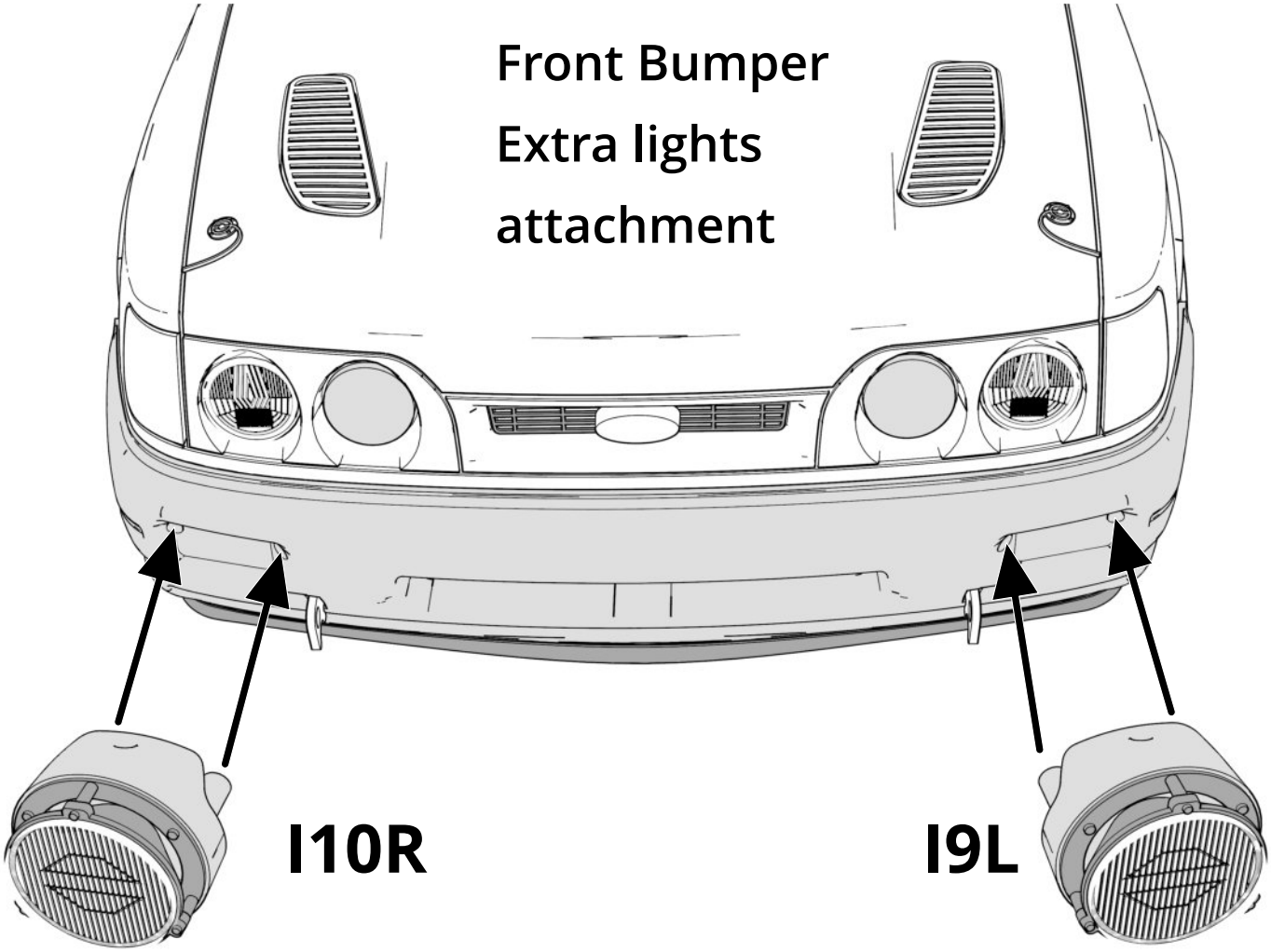

Front Extra Headlights assembly

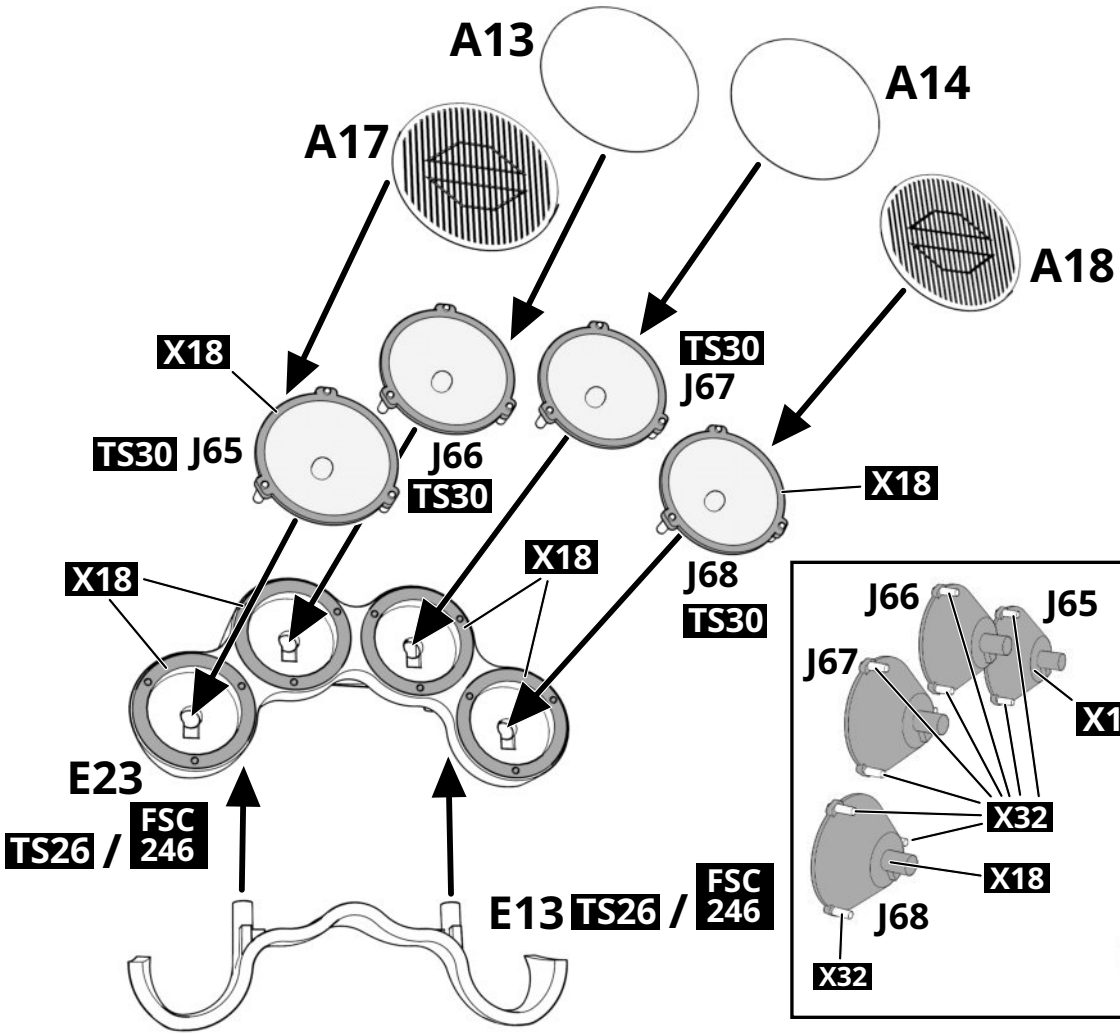

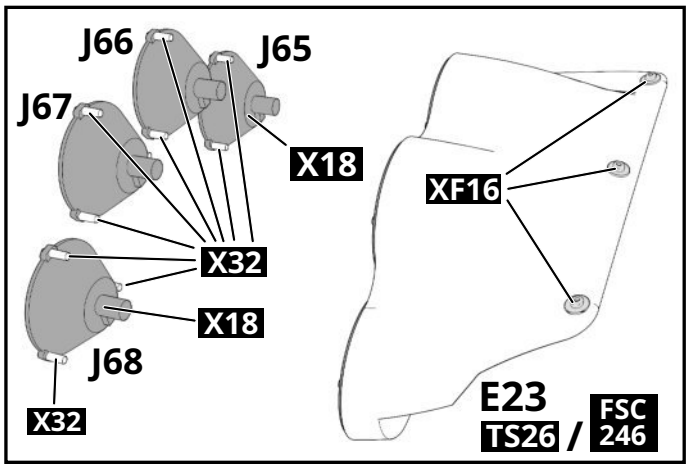

Front Extra Headlights attachment

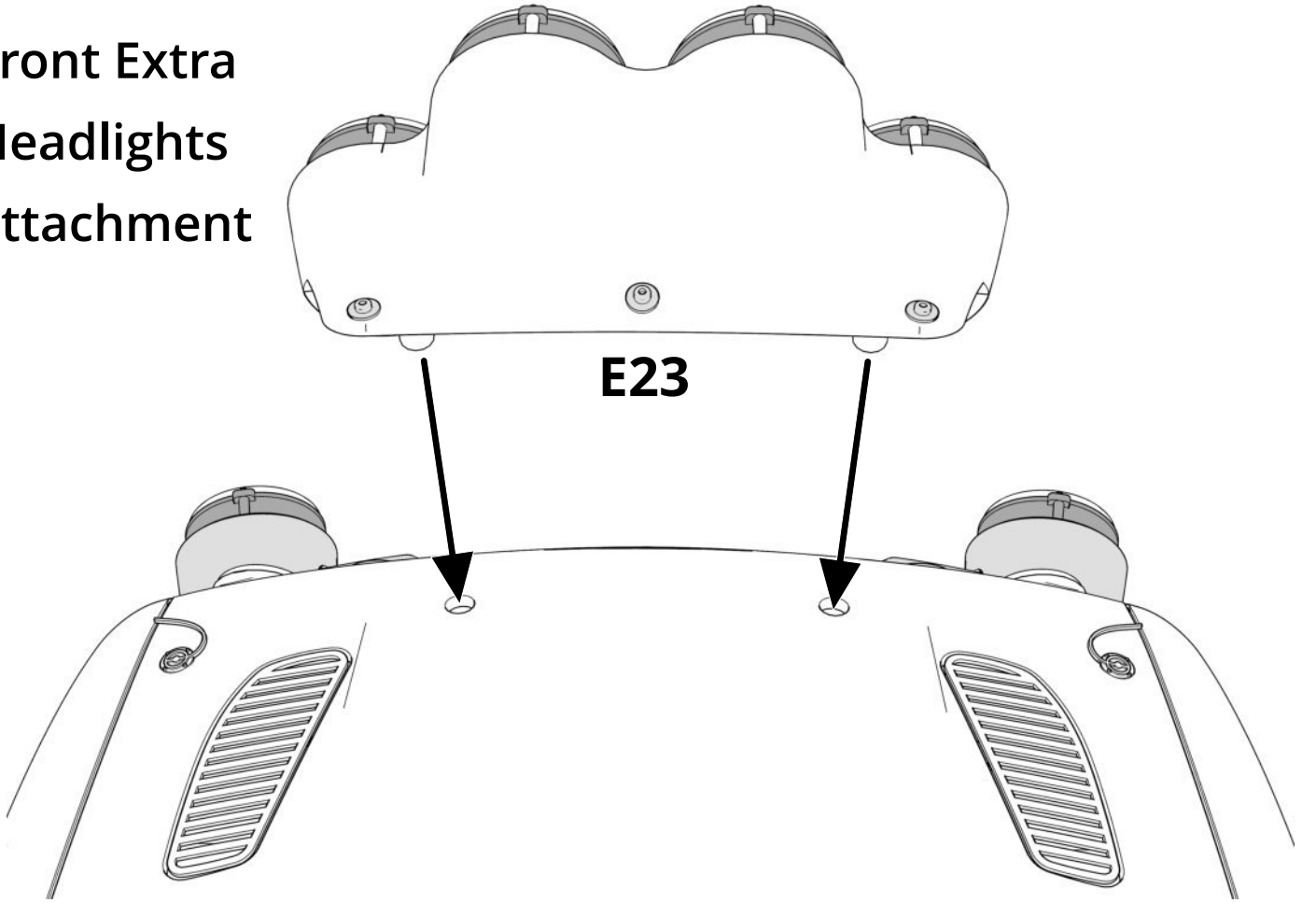

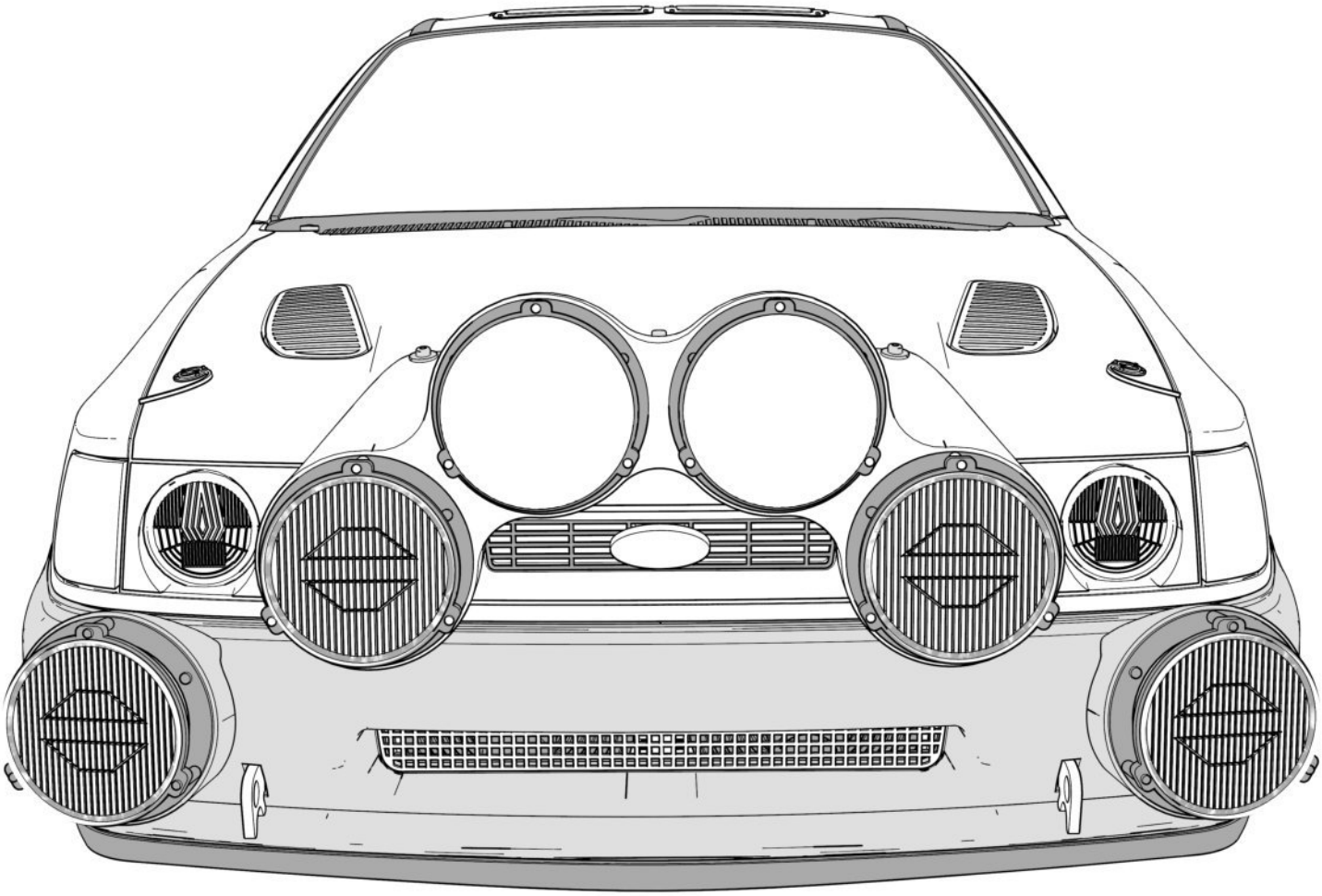

Front Extra Headlights alignment

Wipers , Side mirror , Spoiler and Antenna attachment

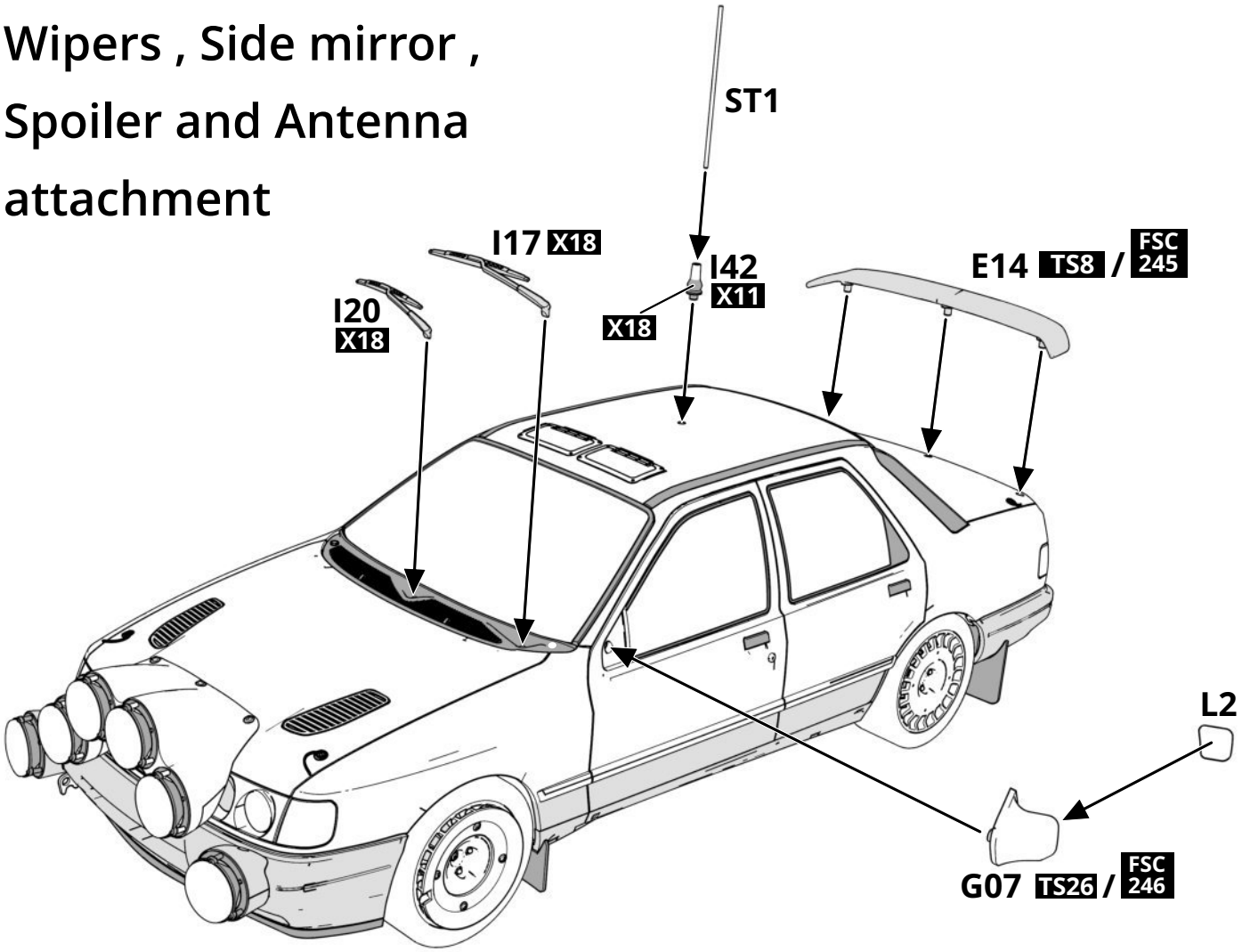

Completed

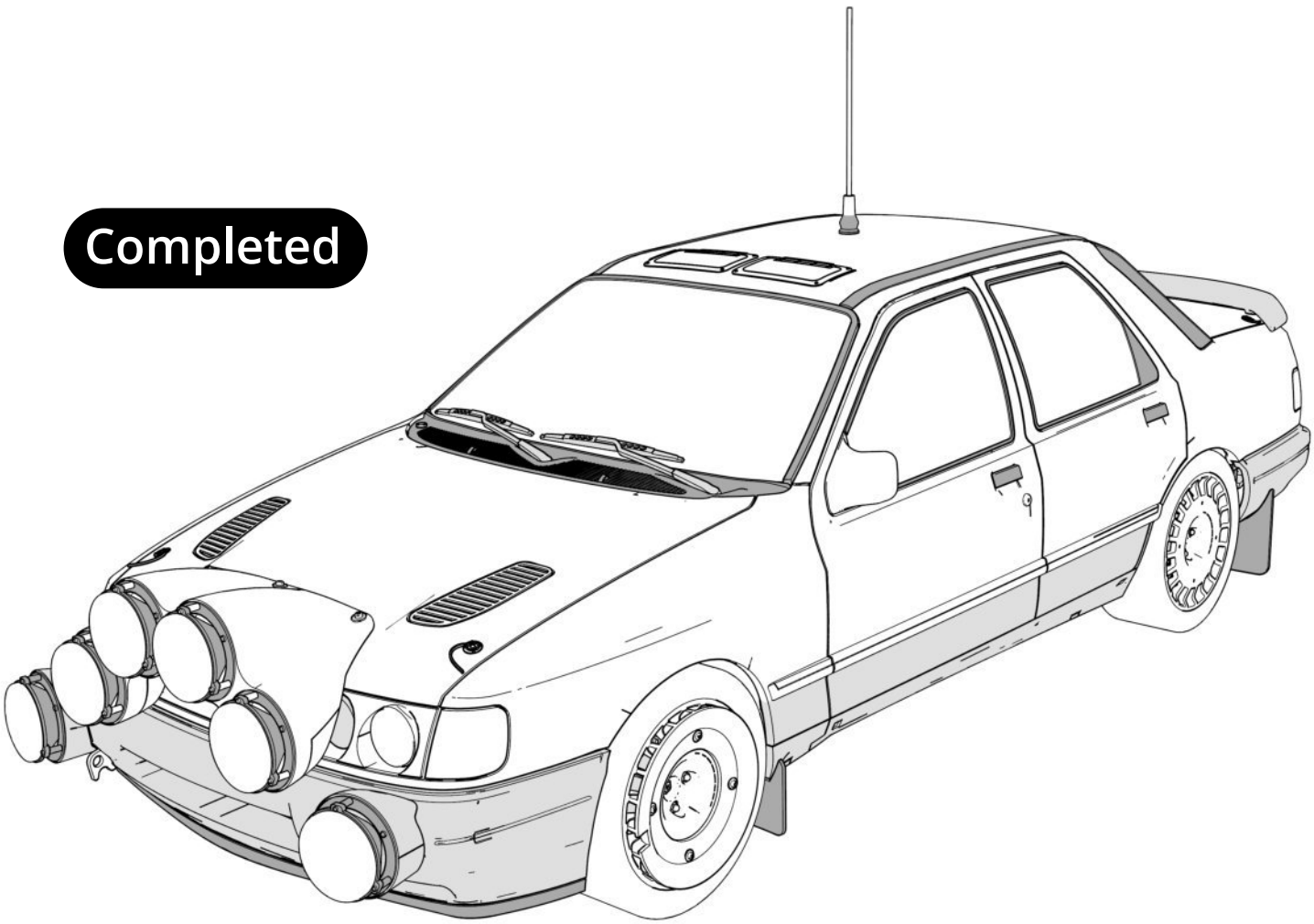

Parts

Do not use dark shaded parts

B

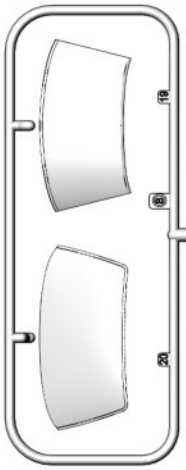

A

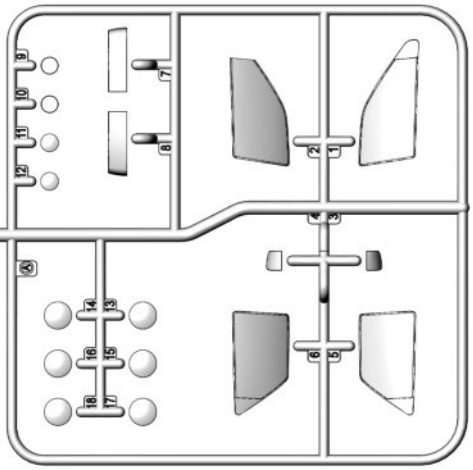

D

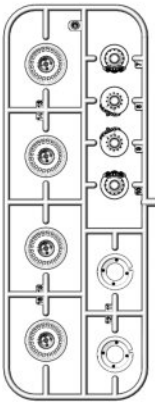

C

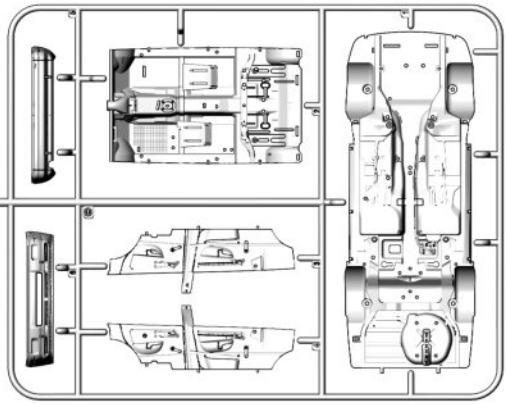

E

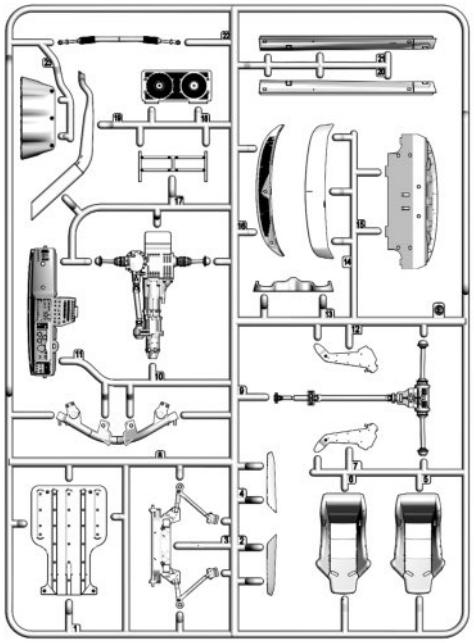

H

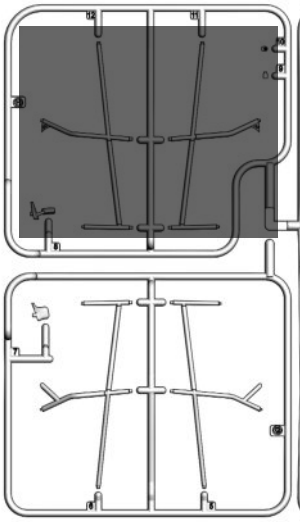

F

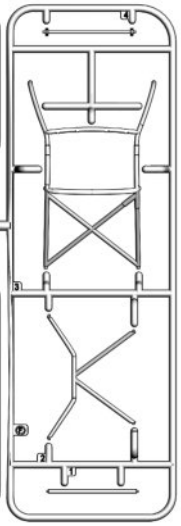

G

I

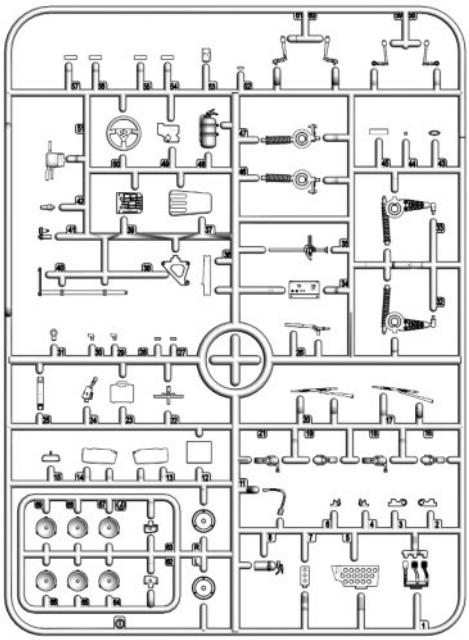

J

K

Tires

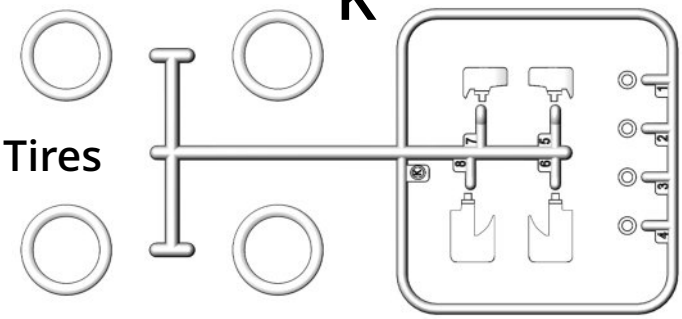

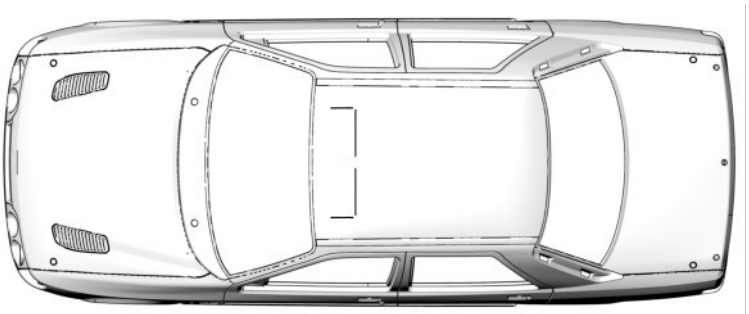

O Body

N

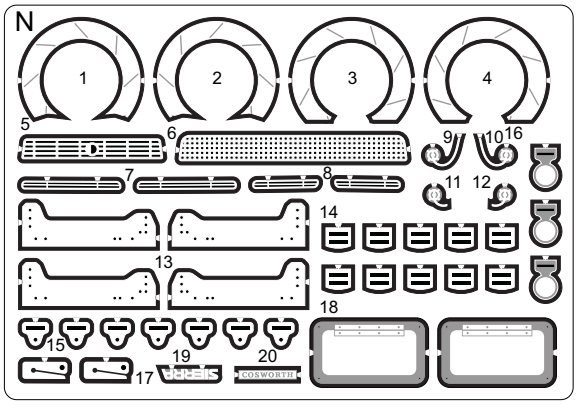

N Photo Etching

Labels

L

T Belts

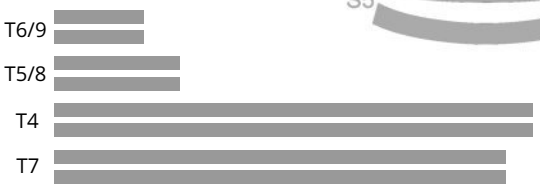

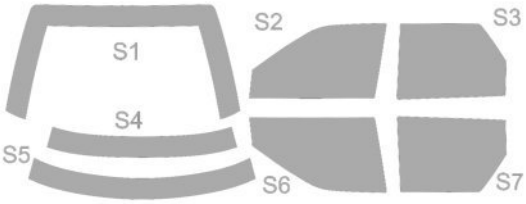

S Stencils

ST Antenna