02098-Grub screw M3*4 8P	02099-Grub screw M4*4 10P	02100-Wheel Hex. 8P	02101-Steering bushing 12p
02102- M3 nylon locknut 6P	02103- Zip Tie 6P	02138- Rolling Bearing ϕ15*ϕ10*4 - 6pcs	02139- Rolling Bearing ϕ10*ϕ5*4 - 8pcs
06003-Front Bumper	06007-Link ball head 4P 2P	08005- Front Lower Suspension Arm 2P	08006 - Rear Lower Suspension Arm 2P
08007-Body post 4P	08012-Shock Tower	08019-Rear Lower Arm Pin B 2pcs	08020-Front Lower Arm Pin B 2pcs
08021-Shock Ball Head Holder	08024-Discal screw M3*10*8	08027-Pin 2*10 10P	08029-Front/rear dogbone 88 mm 2P
08042- Front/rear link 2P	03006- Antenna Mount	03007- Motor Mount	03008- Switch Cover

EP off-road truggy (D) -spare Parts

03009- Battery cover post	03010- Battery cover	03011- Motor RC(540)	03013- Radio tray holder
03015- Drive shaft+ E-clip	03018- Electronic Speed Controller	03014-Battery Pack (7.2V 1800mA)	04001- Chassis
04002- Radio tray	04003- Centre dogbone	04004- Battery Corner Holder	11164- Diff. Main Gear (64T)
11120- Motor Gear (18T)	03300-Motor Heatproof Cover	08151-Tire Insert Sponge 2P	

102010-Aluminum Front Hub Carrier (L/R)	102011-Aluminum Steering Hub(L/R)	102012-Aluminum Rear Hub Carrier (L/R)	102042-Aluminum Wheel Hex. Mount 4P
102048-Aluminum Nut M3 8P	102049-Aluminum Nut M4 4P	106017-Aluminum Front/rear & Servo Link 2P	108015-Universal **Drive Joint 2P**
108019-Aluminum Front **Lower Arm 2P**	108021-Aluminum Rear **Lower Arm 2P**	108022-Aluminum Shock Tower	108037-Aluminum Body Post 4P
110004-Aluminum Shock Absorber 2P	107050-Battery pack (7.2V,3000mAh)	107051-Brushless Motor KV:3300 Taiwan	107052T-Brushless Electronic Speed Control Output:75A Taiwan
28446- Motor RC(550) ★ Taiwan	03028- Fail Safe Taiwan	28435-Electronic speed controller 20T Taiwan	28437-Electronic speed controller 15T Taiwan
28430-Lithium battery Charger Taiwan	28453-2CH CHARGER Taiwan	28454-3Power Switch	28456-3CH CHARGER

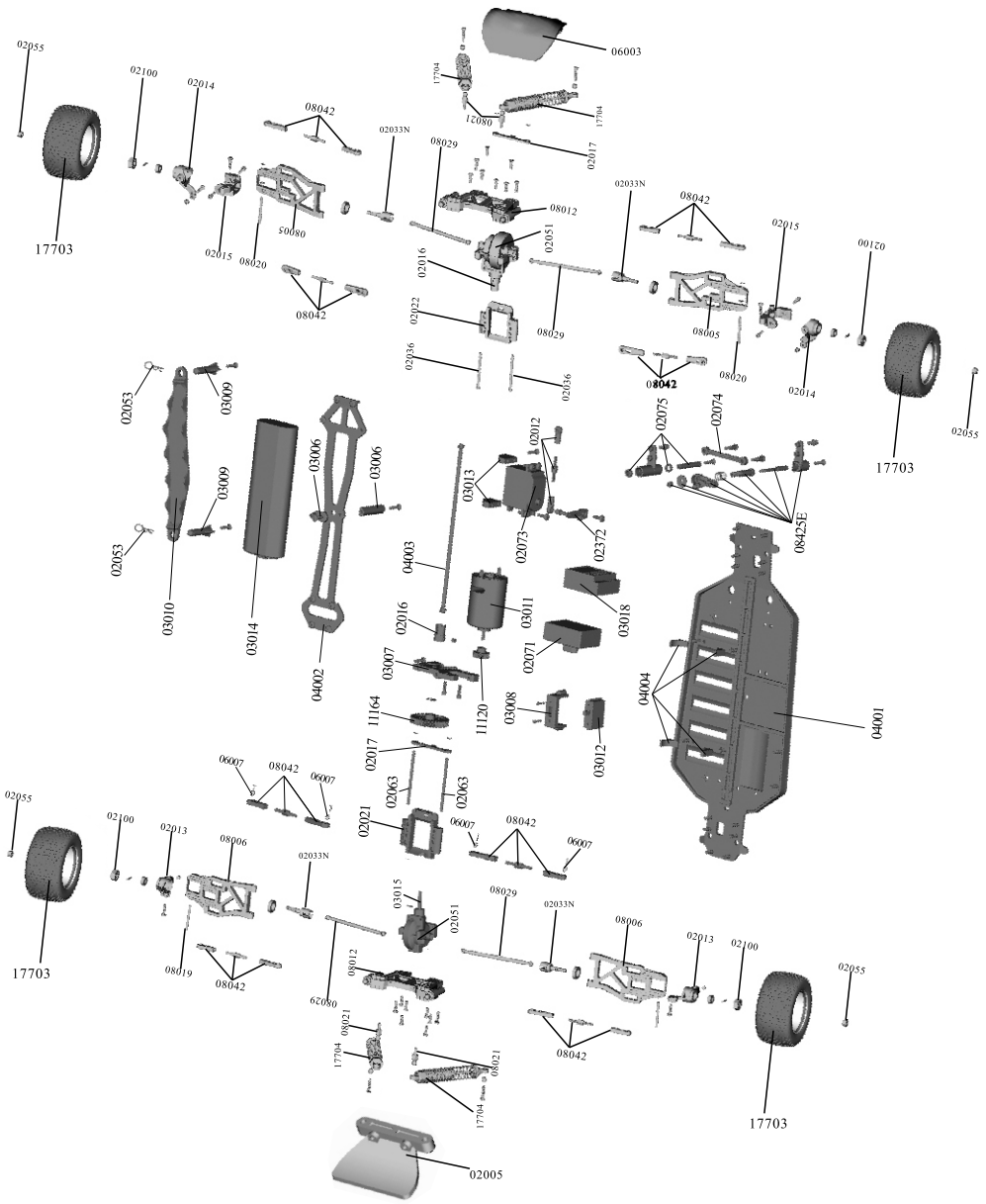

Full Assembly View

The actual received parts may vary from the images!

Optional parts are subject to change without prior notice.