INSTRUCTION MANUAL

1/10TH SCALE ELECTRIC POWERED ROCK CRAWLER

SERIE 3500 CRAWLER

Notes:

- The radio controlled racing models is not toy. It is suited for experienced operators. Read and understand the instructions carefully before operating or assembling your racing model.
- Specifications are subject to change without prior notice, and actual received model may vary from the images and/or descriptions in this manual.

1/10th Electric Powered Crawler is equipped with single motors,a lot of metal parts to make sure the construction solidly.The high precision ESC is also equipped on the Car. You are not only have a chance to see the beautiful nature scene but also climb over the most chanlleging rugged terrain.

Additional Items Needed For Running Your Model

Transmitter

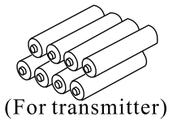

(For transmitter)

Ni-Ca batteries 6V 500mA
or aa alkaline dry batteries

Technical Data:

Length.....450mm/ 470mm(Extra loner version)
Height.....200mm(body excluded)
Wheel Diameter.....126mm
Wheel Width.....56mm
Motor.....7.2V RC540
Steering Angel:40-50°
Maximum Torque Angel:90°

Width.....258mm
Gear Ratio.....1:48
Wheelbase.....320mm
Weight.....2100g.
Battery.....7.2V SC2000mAh NI-mh
Air Current:about 1A,Climb Current:about 15A

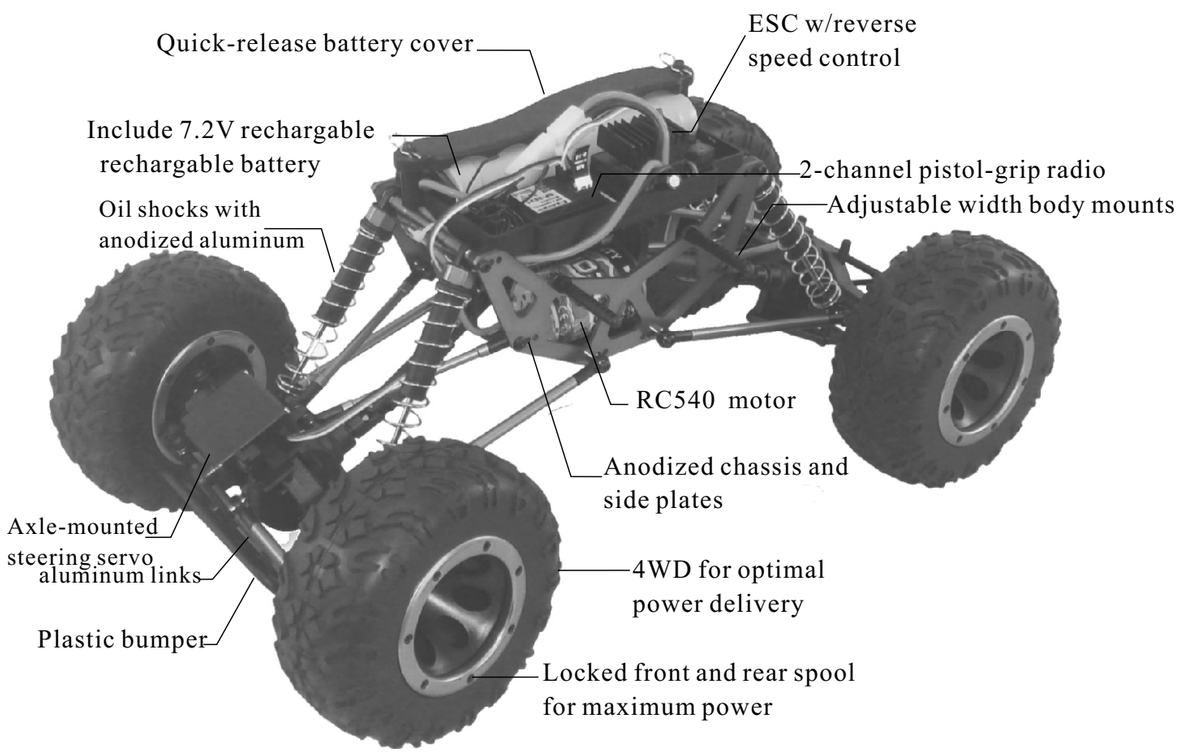

Use of the transmitter to control your EP vehicle...

Transmitter A

Please install eight "AA" batteries to the transmitter.

Slide the battery cover to open the battery compartment.

Replace the battery cover after eight AA batteries are installed.

Battery Precautions:

1.In order to maintain good performance ,we warmly recommend you to use the 1.5V alkaline batteries instead of the 1.2 V chargeable batteries.
2.The batteries may leak in the event that they are installed with wrong polarities.
3.Do not use batteries of different types.
4.Do not mix the old and new batteries.
5. Please replace batteries when power indicators are weak.

Function Switches On This Transmitter

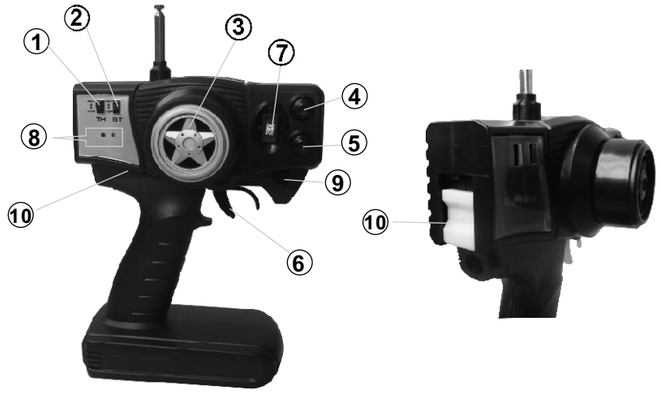

1.Throttle Reverse Switch
2.Steering Reverse Switch
3.Control Wheel
4.Steering Trim
5.Throttle Trim
6.Trigger
7.Crystal(To change please pull out)
8.Power Indicators
9.Trigger Setup Trim
10.Power Switch

1. Trigger at the neutral position

2. Pull the trigger inward to drive the car forward.

3. Release the trigger back to neutral position to slow down the car.

4. Push the trigger outward to stop the car immediately completely (breaking)

5. Release the trigger back to the neutral position again (required step to activate the backward feature on the ESC)

6. Push the trigger outward again to drive the car backward.

General information

1.It is used for the crawler only.
2.It contains various steering modes which makes the crawler perfect for crawling on road or rocks.
3.Fully extend its antenna while using it.
4.Various frequencies of AM crystals are available at factory
5.This radio control is a high precision product and allowed itself to be used with your good care.

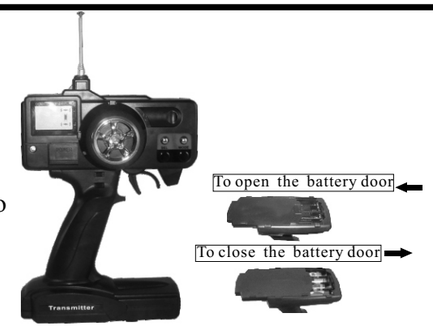

Transmitter B(Optional)

Full function AM radio controller

1.Antenna
2.LCD Screen
3.Steering Control Wheel
4.Steering Trim/Reverse Switch
5.Throttle Trim
6.Power Switch(Slide it to turn on/off)
7.Working Indicator
8.Servo steering Trim（Angel)
9.Trigger
10.Trim Switch(rear wheels)
11.Steering Mode Switch
12.SEL function button

Full function steering modes

This AM radio controller contains various steering modes which are perfect for the rock crawler.

LCD Screen

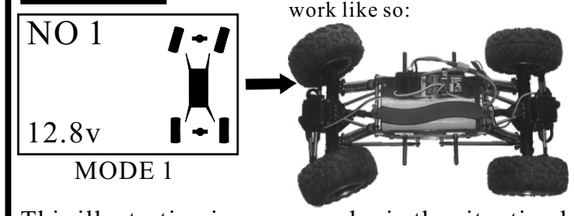

MODE 1

Your crawler will work like so:

This illustration is your crawler in the situation by performing the first mode on the radio control. Front steering is to turn to the left or right but rear steering remains aligned.

LCD Screen

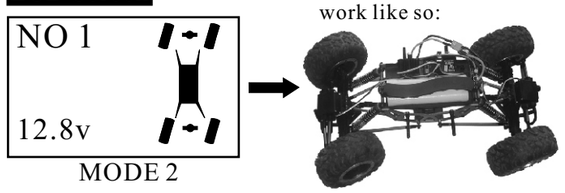

MODE 2

Your crawler will work like so:

This illustration is your crawler in the situation by performing the second mode on the radio control. Front steering is to turn to the left and rear steering is to do likewise.

LCD Screen

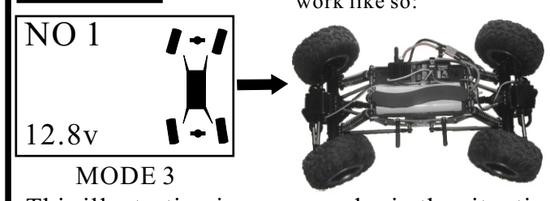

MODE 3

Your crawler will work like so:

This illustration is your crawler in the situation by performing the third mode on the radio control. Front steering is to turn to the left but rear steering is to trun right.

LCD Screen

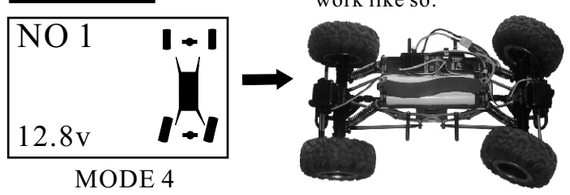

MODE 4

Your crawler will work like so:

This illustration is your crawler in the situation by performing the fourth mode on the radio control. Rear steering is to turn to the left or right but front steering remains aligned.

Throttle/Brake Trigger

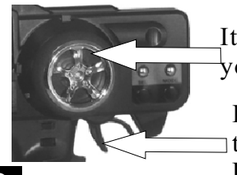

It controls the steering of your rock crawler.Turn the wheel to the right and your crawler turns right.Turn the wheel to the left and your crawler turn left.

It controls the speed and braking ability of your rock crawler.Pull the trigger to speed up.release the trigger to decelerate,and push the trigger to brake. Pushing the trigger a second time and activates the reverse function.

SEL funciton button

This AM radio controller contains a variety of select functions.Once your press SEL button,different functions will come up in turn with LCD indicators on.

Steering Trim/Steering Reverse Function

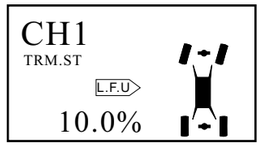

TRM.ST(Steering Trim)range is around 0-10.0% for both left and right steering on front wheels. Tune this switch to select your desired steering trim volume.

To switch to steering Reverse program:
Press **SEL**(Select Button)on your radio once,this LCD display appears Channel 1(NOR)
Tune the Switch(Steering Trim/Reverse Switch)to change NOR into the REV as shown below:

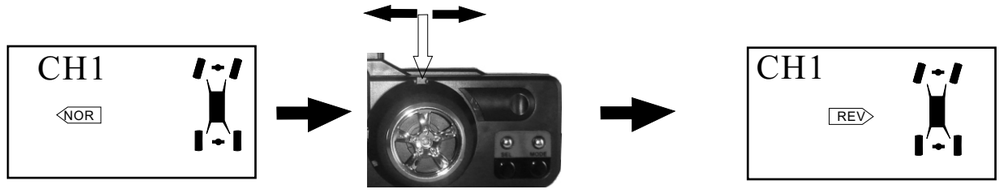

Throttle Trim/Throttle Reverse Switch

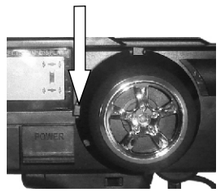

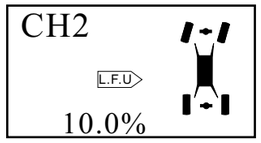

TRM.TH(THrottle Trim)range is around 0-10%.Tune this switch to select your desired throttle trim volume.

To switch to Throttle Reverse program:
Press SEL(Selecct Button)on your radio once,this LCD display appears Channel 1(NOR.)
Tune the SWITCH(Steering Trim/Reverse Switch)to change NOR into REV as shown below:

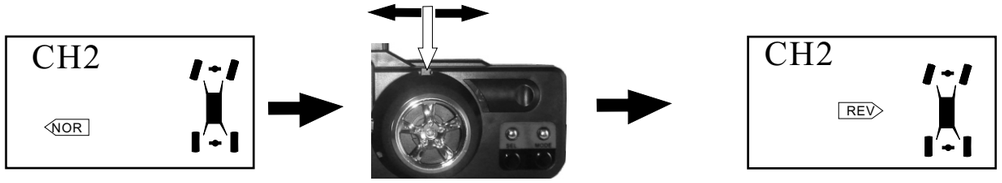

Steering Dual Rate Control Dial(D/R)

This dial adjusts the overall travel of the steering servo,push the dial forward for maximum steering.Pull the dial back to reduce steering travel.D/R adjustable range is around 5-10%

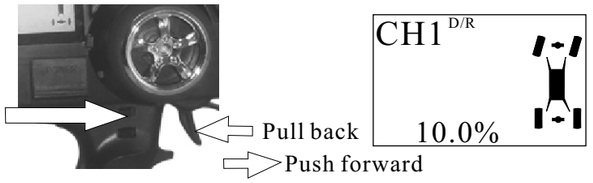

Trim Switch(For Rear Wheels)

This dial is to centre the rear wheels.The range is around 0-10% on the left or right rear wheel.

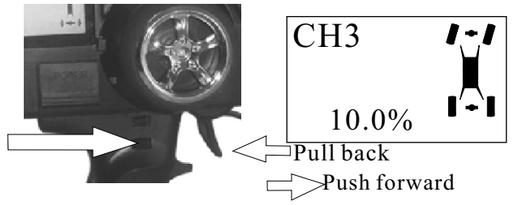

Electronic Speed Controller-ESC(18051)

Good performance of EP vehicles rely on the Electronic speed controller and motor, The new style ESC(18051)works on 1/10 Crawler ,is a new kind of drive FET amp with high frequency and reverse function. Unlike the other ESC,the setting have been simplied.,It is suitable for the novice and the experience operator. If the running speed is bigger than the original data of ESC,the ESC will update the full speed automatically, forward means forward,backward means backward,center position means brake automatically.

Technical Data

- ●Input Voltage:6V-8.4V DC
- ●BEC:5V 1A
- ●Current Capacity(FET range):Forward=100A;Backward=50A
- ●Case Dimensions:L35*W33*H30(include protective heat guard)
- ●Weight:46.3g
- ●Correspond Motor:540/23T or above

Connections

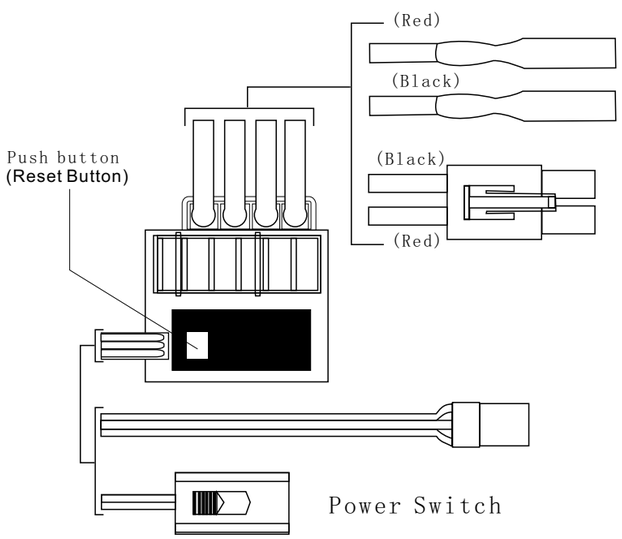

Motor Connector
Note: Red is "+",and Black is "-".
Reverse connectors if the motor works in the wrong direction.

Battery connector
Note: Red is "+",and Black is "-".

Receiver connector
It will be connected to the receiver throttle channel.

Connector Setting:

1.Neutral Set:The ESC sustain the car foward,backward with a distance 50%/50%&70%/30%center position of transmitter motor control mode. While you adjust to the above mode.We recommend you adjust the speed range of transmitter to the normal.The ESC will update the full speed automatically.The LED blink in red and yellow indicates searing the neutral

2.According to the diagram above,perform the correct collections,turn on the transmitter then the ESC, Once ESC is turned on,it automatically switched to Neutral,you can hear a subtly confirmed sound(DO, RE MI)that indicates ESC is set at netural .If the motor can't stop running after the neutral position is settd for a period of time,please close the ESC switch then reopen it,the neutral position should be reset it.

Features:

1.Pull your transmitter trigger back to expect your car to go forward.in this way,LED is supposed to blink slowly in red.As the running speed of your Car rises,LED blink faster.If the full speed reaches,LED will become steady in red.

2.Push the trigger outward to stop the car immediately(breaking).LED blink slowly in red,If the full speed of brake reaches,LED will become steady in red.

3.Push the trigger outward again to drive the car backward.LED blink slowly in red.If the full speed reaches, Led will become steady in red.

Note:

1.The ESC is not waterproof,so the water can't flow into the ESC.The battery plug should pull outed immediately once water flowed,use the blower to dry it before electrify test.

2.The ESC is hot in use.and the Heat Guard of ESC is very high after operation.so it can't be touched in use or after operation.

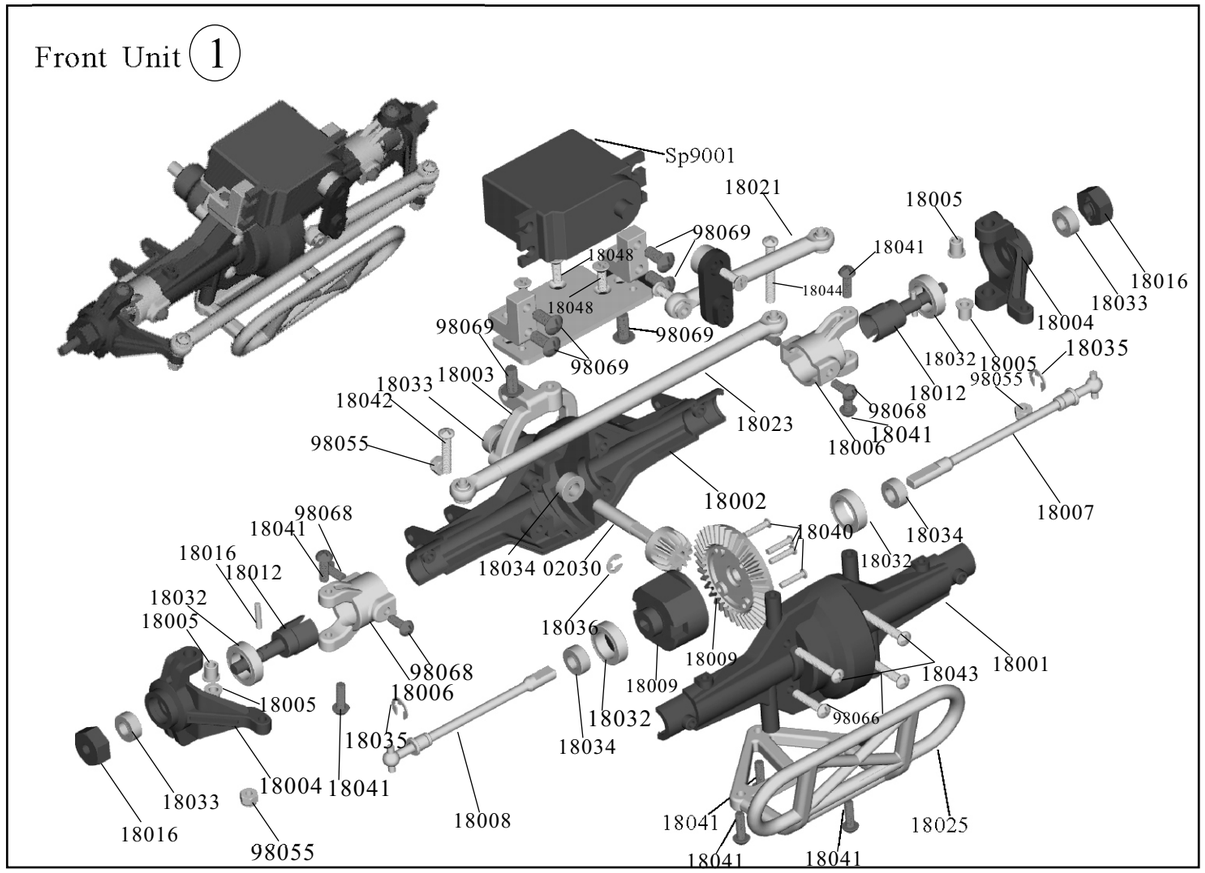

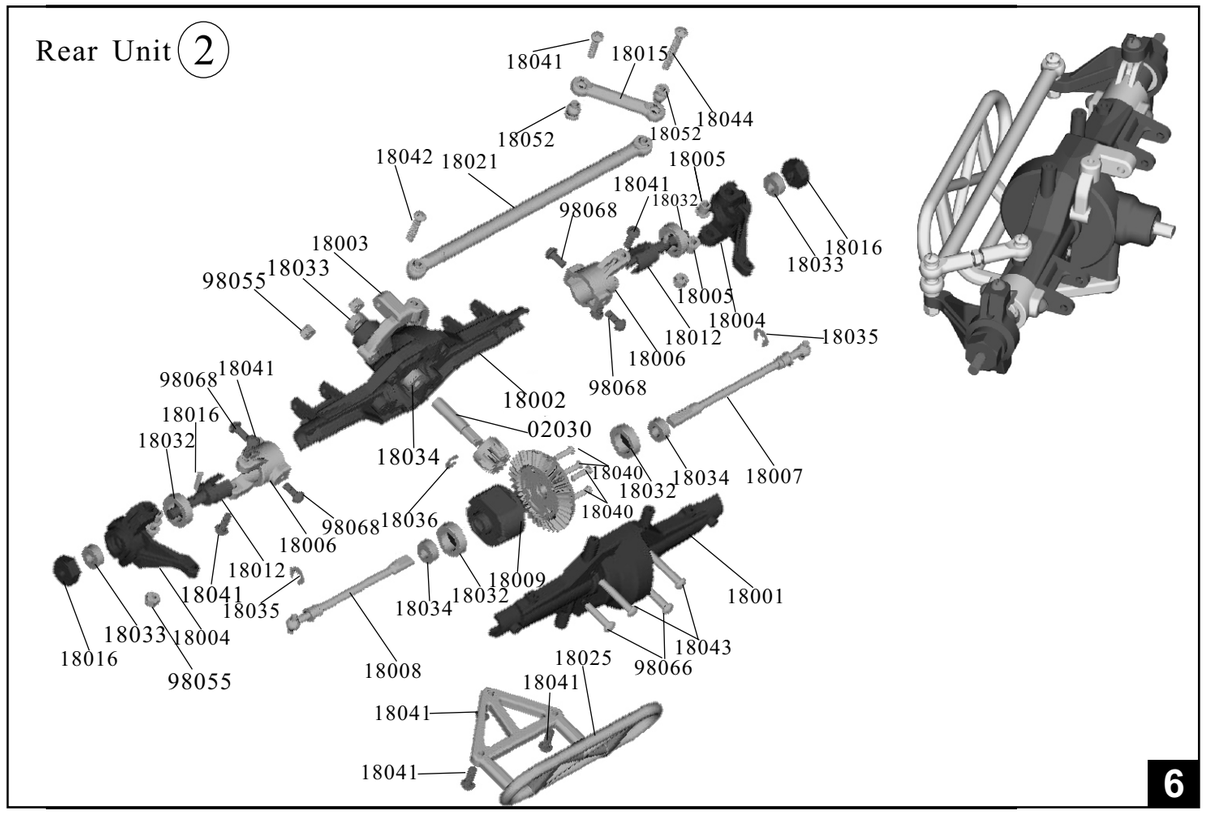

Center Unit 3

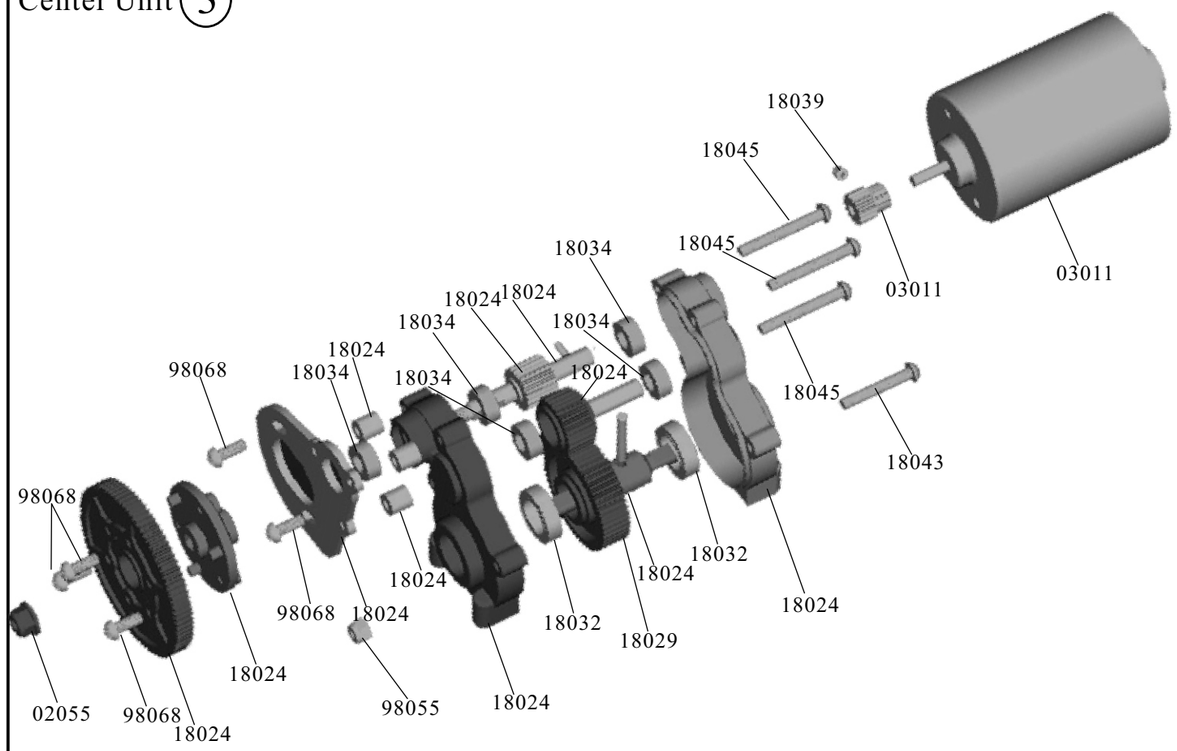

Battery Assembly Set 6

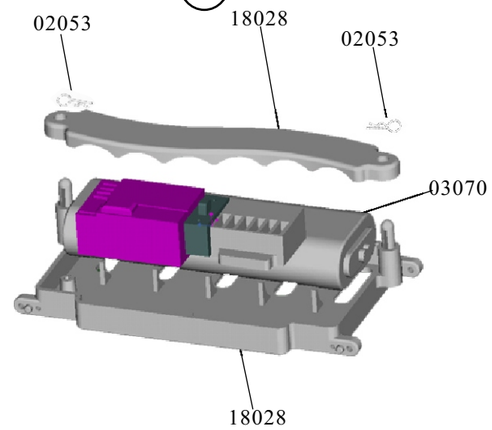

Servo Mount Assembly Set 7

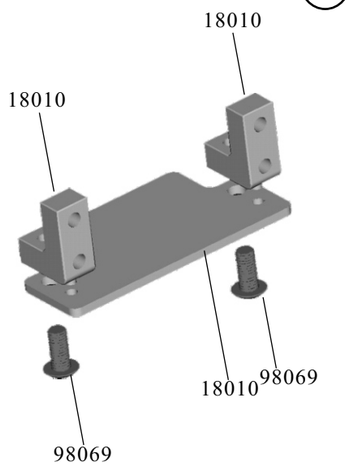

Tire Set Assembly 4

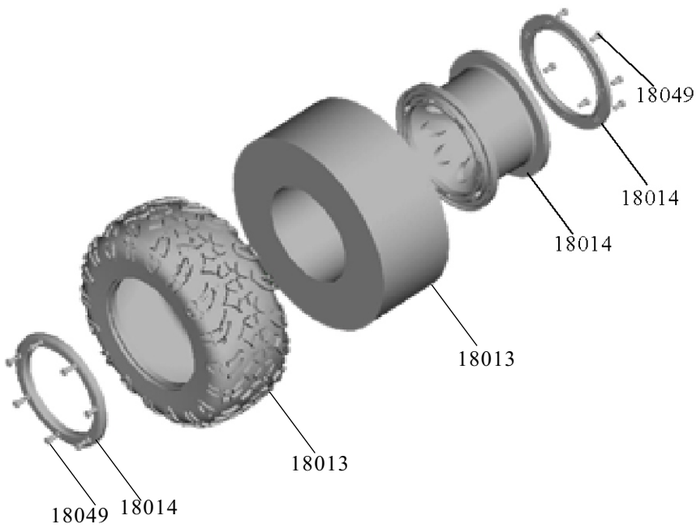

Shock Absorber 5

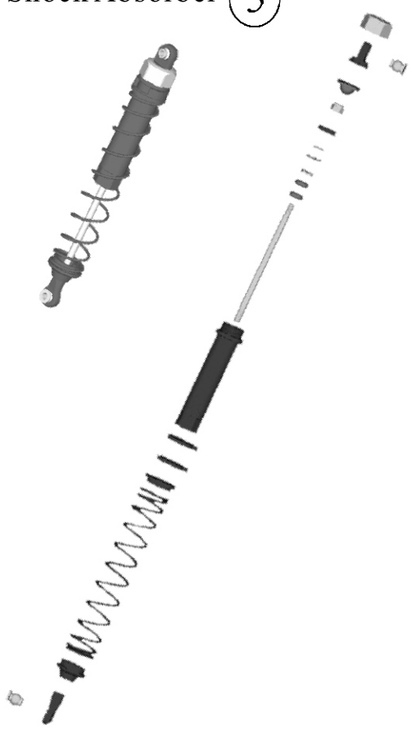

Crawler Exploded View

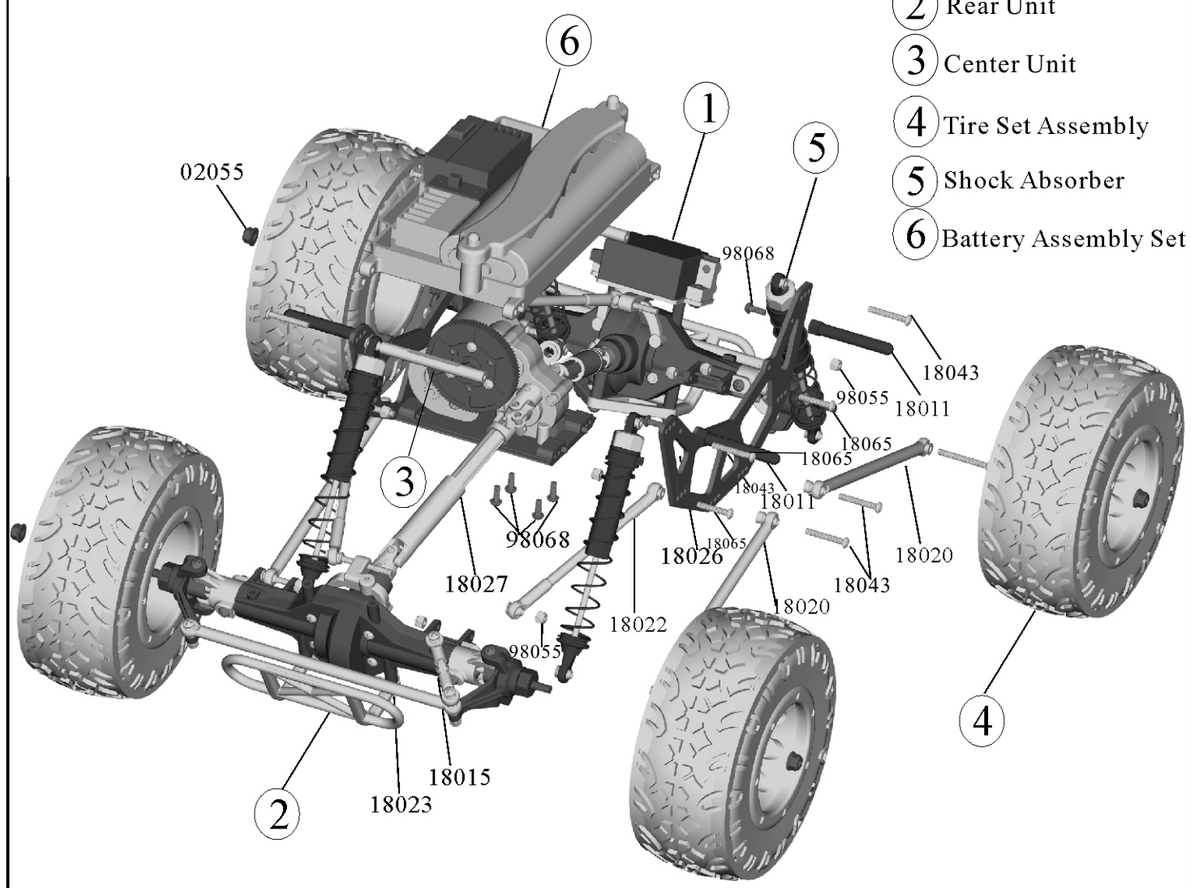

1 Front Unit
2 Rear Unit
3 Center Unit
4 Tire Set Assembly
5 Shock Absorber
6 Battery Assembly Set

Please notice that the parts images with ★ have several kinds of different colors when place your order.

- **T2(Orange)** **T6(Green)**
- **T3(Blue)** **Extra longer Version(Titanium)**

Crawler Spare Parts SERIE 3500

18001-Front Gear Box (Shell Only)	18002-Rear Gear Box (Shell only)	18003-Center Link Ball Mounts 2P	18004-Caster Mounts 2P
18005-King Pin Bushing 8P	18006-Steering Arm(L/R)	18007-Drive Shaft(L) 2P	18008-Drive Shaft(R) 2P
18009-Connect Box w/main gear (38T)	02030-Drive Gear(13T)	18010-Servo Plate w/servo mount ★	18011-Body Post 4P
18013-Tire w/Foam 2P	18014-Rims/Secure Ring 2P ★	18017-Pre-Mounted Tire Set 2P	18012-Wheel Axle 2P

Crawler Spare Parts SERIE 3500

18016-Wheel Hex. W/Pins(2*10)	18018-Chassis	02053-Body Clip 6P	18015-Adjustable Linkage
18020-Side Linkage (133.5mm) 2P ★	18021-Servo Linkage (60.23mm) 2P ★	18022-Center Linkage (96mm) 2P ★	18023-Connect Linkage (138mm) 2P ★
18024-Gear Box Set (whole part; include the above parts: (20T), (10*42mm), (28T), (5*18mm), (2*9mm), (87T), (53T), (10*35mm), (2.5*17mm))		18025-Bumper(F/R)	18026-Side Plate 2P ★
18027-Universal Driven Dogbone 2P	18019-Shock Absorber 2P ★	Sp9001-Servo(9kg)	18028-Battery Holder w/Covers
03020-Receiver	18029-ESC	03070-Battery (NI-MH 7.2V 2000mAH)	03011-Motor(RC540) w/ Gear(14T)
02055-Nylon Nuts M4 8P	18030-Ball Stand ϕ5.9 6P	18052-Ball Stand ϕ5.9 8P	18032-Ball Bearings (10*15*4) 6P

Crawler Spare Parts SERIE 3500

18033-Ball Bearings (5*10*4) 8P	18034-Oil Bearings (5*10*4) 8P	18035-E-Clips 8P ϕ4.0	18036-E-Clips 4P ϕ2.5
18037-Washer 6*2.7*0.5 6P	18038-Nylon Nuts M2.5 8P	98055-Nylon Nuts M3 8P	18039-M3*3 4P
98064-Round Head Screw M3*12 8P	98066-Round Head Screw M3*14 6P	98068-Round Head Screw M3*8 8P	98069-Round Head Screw M4*8 8P
18040-Round Head Screw M2*10 6P	18041-Round Head Screw M3*10 8P	18042-Round Head Screw M3*16 6P	18043-Round Head Screw M3*20 6P
18044-Round Head Screw M3*25 4P	18045-Round Head Screw M3*24 6P	18046-Round Head Screw M3*26 6P	18047-Countersink screw M3*8 8P
18048-Countersink screw M3*10 8P	18049-Column Head Screw M2.5*5 8P	18050-Set Screw M3*20 6P	18051-Set Screw M3*15 6P

Crawler (Extra longer version) Spare Parts

18055-Side Linkage (160mm) 2P ★	18056-Servo Linkage (70mm) 2P ★	18022-Center Linkage (125mm) 2P ★	18023-Connect Linkage (145mm) 2P ★
18019-Shock Absorber 2P ★			

Please notice that the following Upgradable Optional have several kinds of different colors for your choose.

■ Color:orange/green/blue/titanium

Crawler Upgradable Optional SERIE 3500

180001-Center Link ball Mounts (AL). 2P	180002-Caster Mounts (AL.) 2P	180003-Steering Arm (L/R) (AL.)	180004-Rims/Secure Ring (AL.) 2P
180005-Bumper(F/R) (AL.)	180006-Chassis (AL.)	180007-Shock Absorber (AL.) 2P	180008-Body Post 4P (AL.)
180009-Connect Box (W/Gear 38T) AL.	180010-Servo Mount (AL.) 2P	180011-Universal Driven Dogbone (AL.) 2P	180012-Battery Holder w/Covers (AL.)

Crawler Upgradable Optional SERIE 3500

180013-Gear Box(Shell only) (AL.) 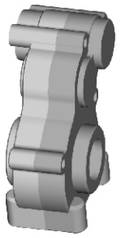	180014-Front Gear Box (Shell Only) AL.	180015-Rear Gear Box (Shell only) AL. 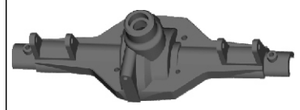	180016-Wheel Hex Mount W/Pins (2*10) 4P
TR80227-Transmitter (3Channel AM/FM27M/ 40M-2.4G)	28469-Receiver (3Channel)	03019-Battery (NI-MH 7.2V 3000mAh)	28424-Battery (NI-CH 7.4V, 2200mAh)
180021-Alum Wheel Weight Set 150g 4P			