Specifications

Brushed Version:

Item No.	94511	Wheel	130*52mm	Motor	RC550-8517
Item Name	OCTANE	Main Material	Plastic/Hardware/Rubber	Servo	15kg
Scale	1/10	Radio/Rx	G4P-2.4G/4CH	Speed	>30kn
Desciption	RTR-Off-Road	R/C Distance	>110?	Weight	2350g
Length	440mm	Transmitter Battery	?AA?4P	Gead Ratio	1:9.88
Width	302mm	Battery Pack	7.4V 3500mAH	Body Color	PC
Height	190mm	Running Time	>25min	Gift Box Size	520*350*215mm
Wheel Base	280mm	Charger Spec	11.1/7.4V800mA (Euro/UK/USA)	Piece per Carton	4P
Ground Clearance	40mm	Electronic Speed Control	WP-1060 / 60A	Certification	EN71,RoHS,CE,FCC
Motor Radiator	✗	Main Gear with Slipper Function	✓	Central Chassis Rail Brace	✗
Full Ball Bearing	✓	Injection Spring	✓	Wheelie	✓

Brushless Version:

Item No.	94511Pro	Wheel	130*52mm	Motor	3652/3300kv
Item Name	OCTANE	Main Material	Plastic/Hardware/Rubber	Servo	15kg
Scale	1/10	Radio/Rx	G4P-2.4G/4CH	Speed	>50kn
Desciption	RTR-Off-Road	R/C Distance	>110?	Weight	2490g
Length	440mm	Transmitter Battery	?AA?4P	Gead Ratio	1:9.88
Width	302mm	Battery Pack	7.4V 38000mAH	Body Color	PC
Height	190mm	Running Time	>25min	Gift Box Size	520*350*215mm
Wheel Base	280mm	Charger Spec	11.1/7.4V800mA (Euro/UK/USA)	Piece per Carton	4P
Ground Clearance	40mm	Electronic Speed Control	WP-10BL60 / 60A	Certification	EN71,RoHS,CE,FCC
Motor Radiator	✓	Main Gear with Slipper Function	✓	Central Chassis Rail Brace	✓
Full Ball Bearing	✓	Injection Spring	✓	Wheelie	✓

Assembly Steps

1. Diff. Gear Assembly

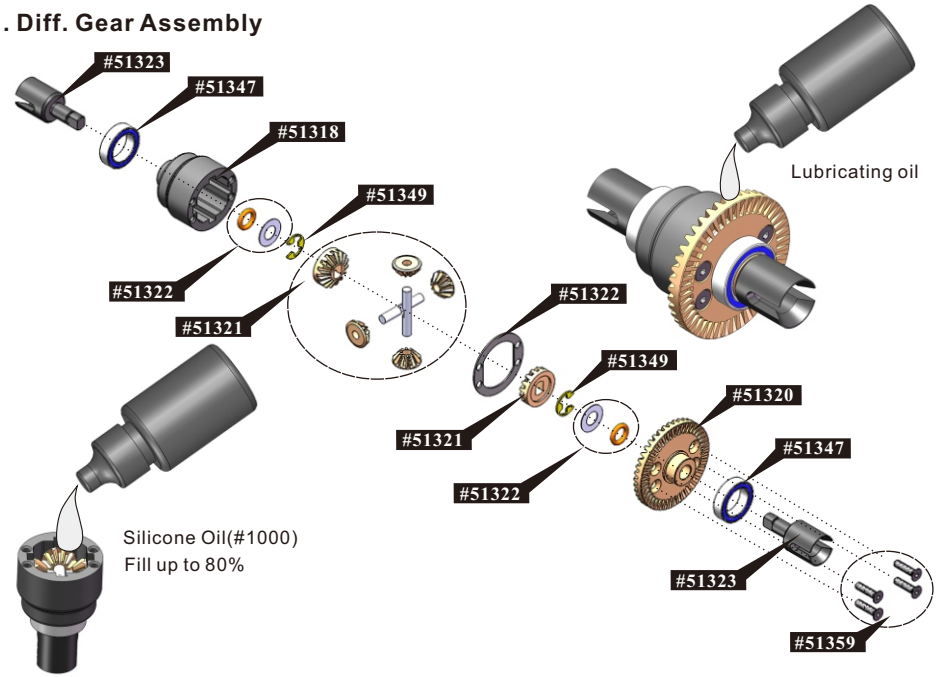

2.Spur Gear Assembly

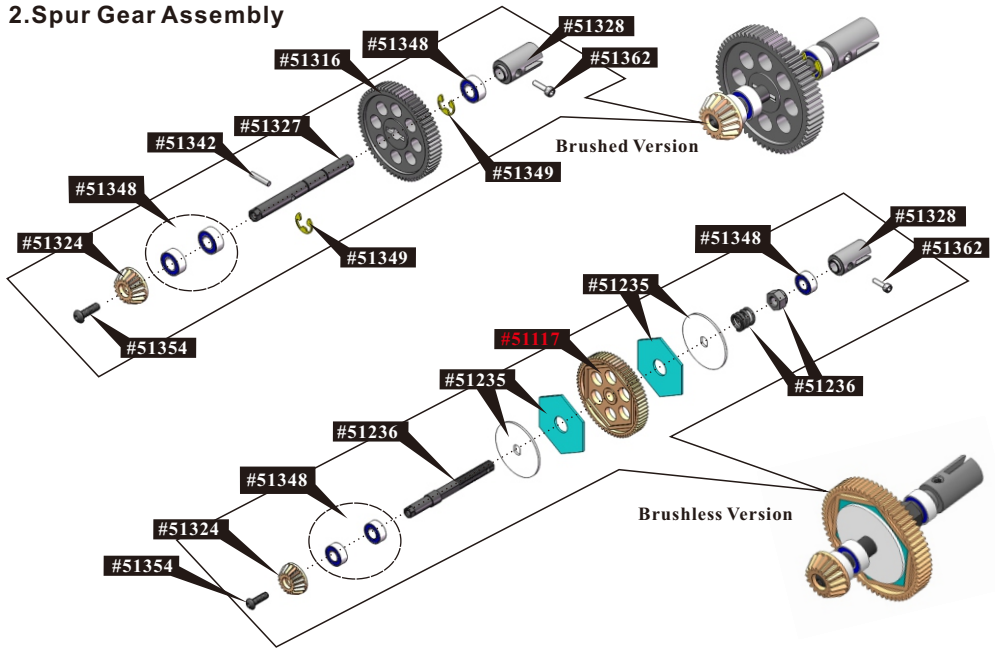

2. Diff Case/ Driveshaft Assembly

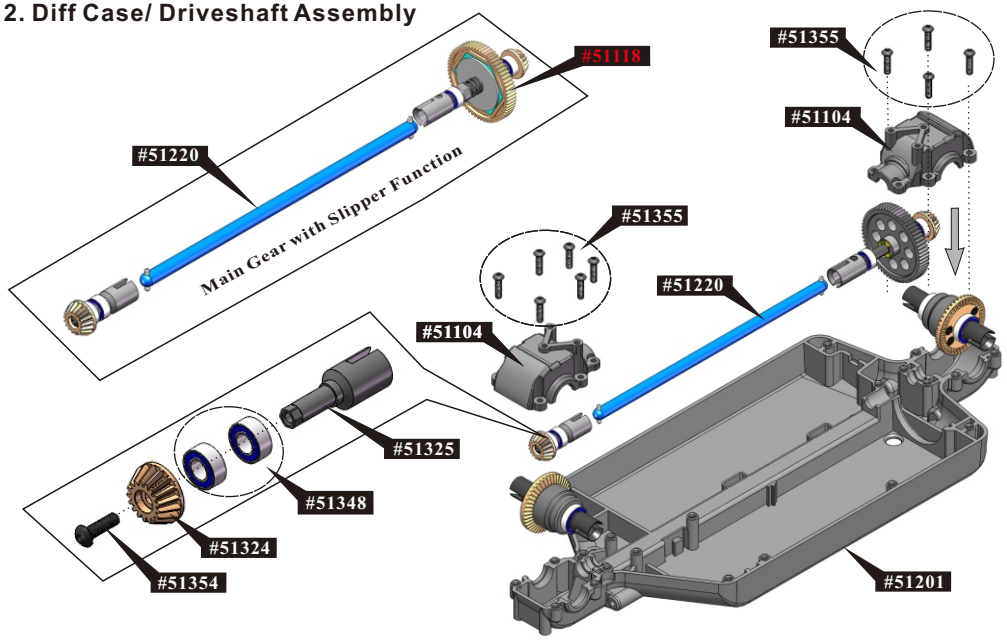

4. Front Shock Tower Assembly

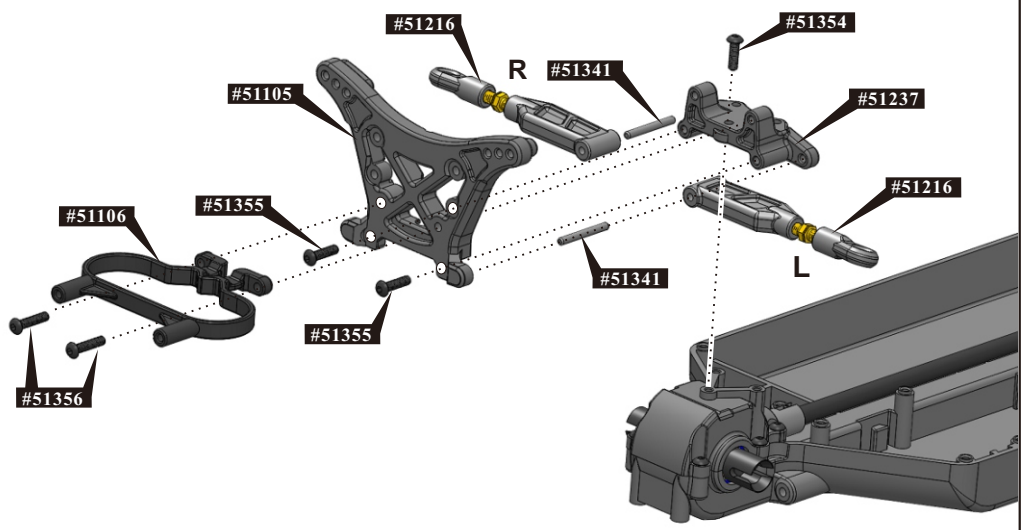

3. Motor Assembly

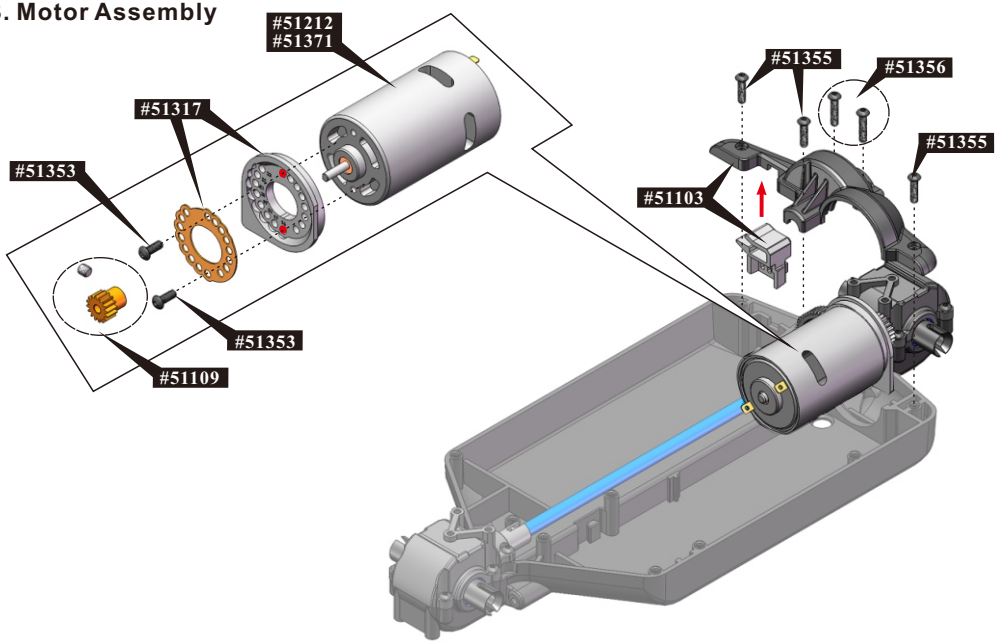

5. Rear Shock Tower Assembly

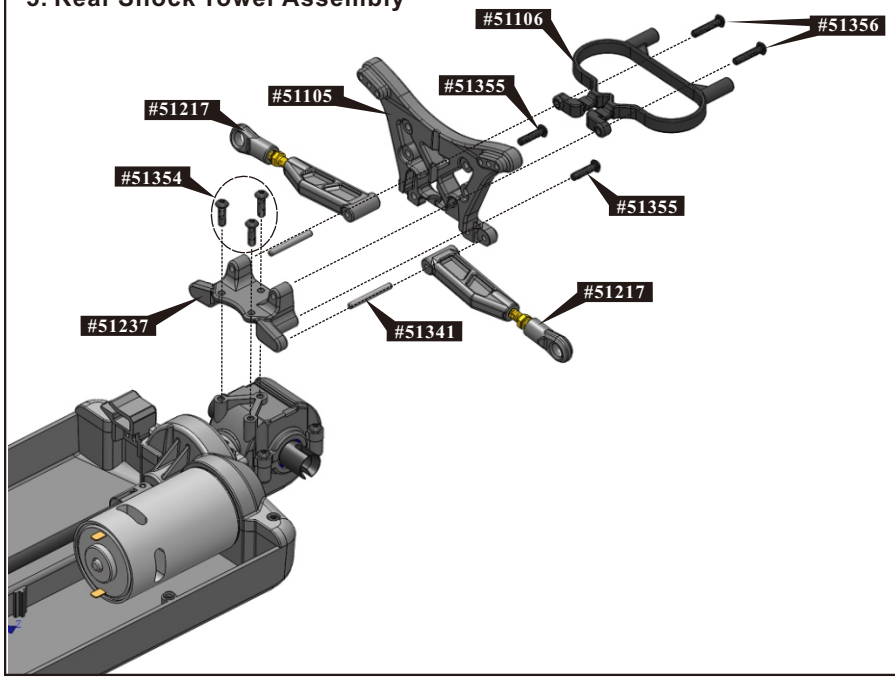

6-1. Front Body Post Assembly

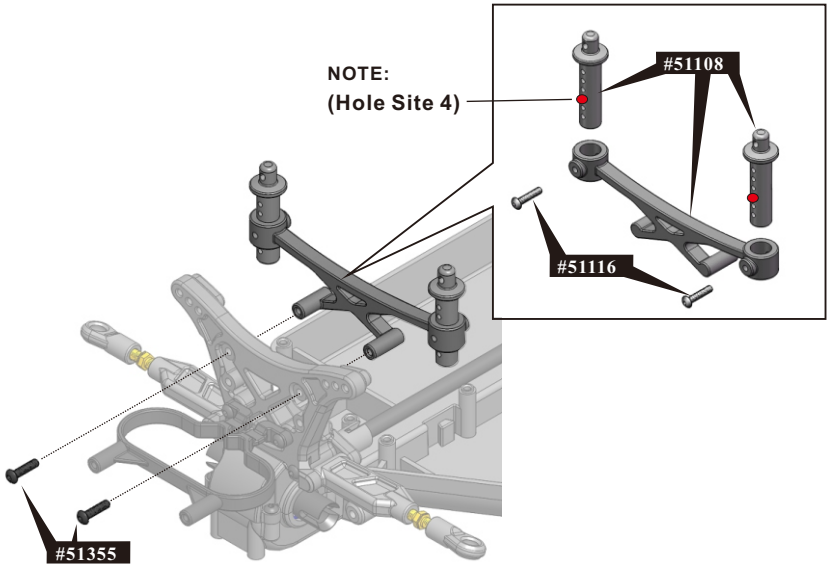

7. Front Bumper Assembly

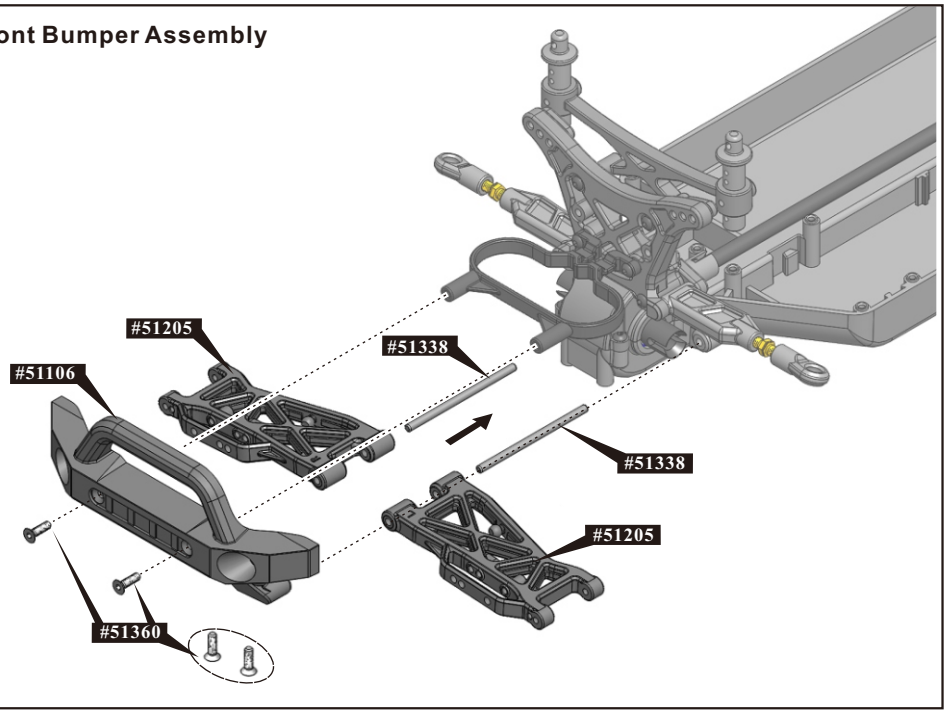

6-2. Rear Body Post Assembly

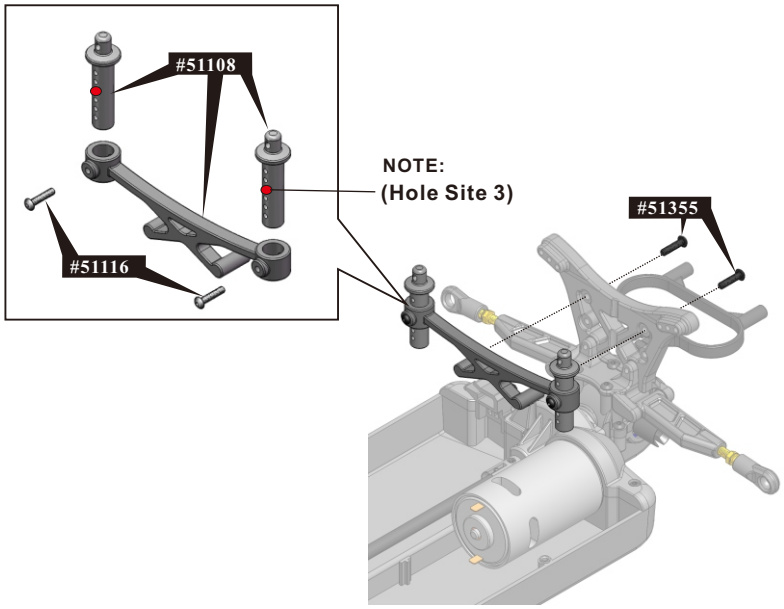

8. Rear Wheelie Assembly

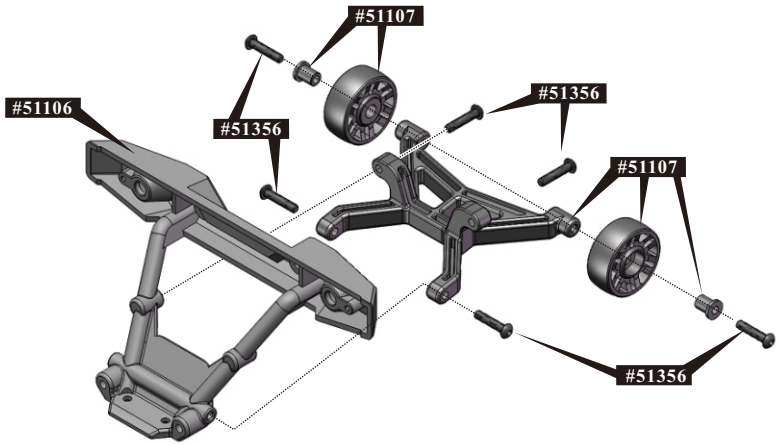

9. Rear Bumper Assembly

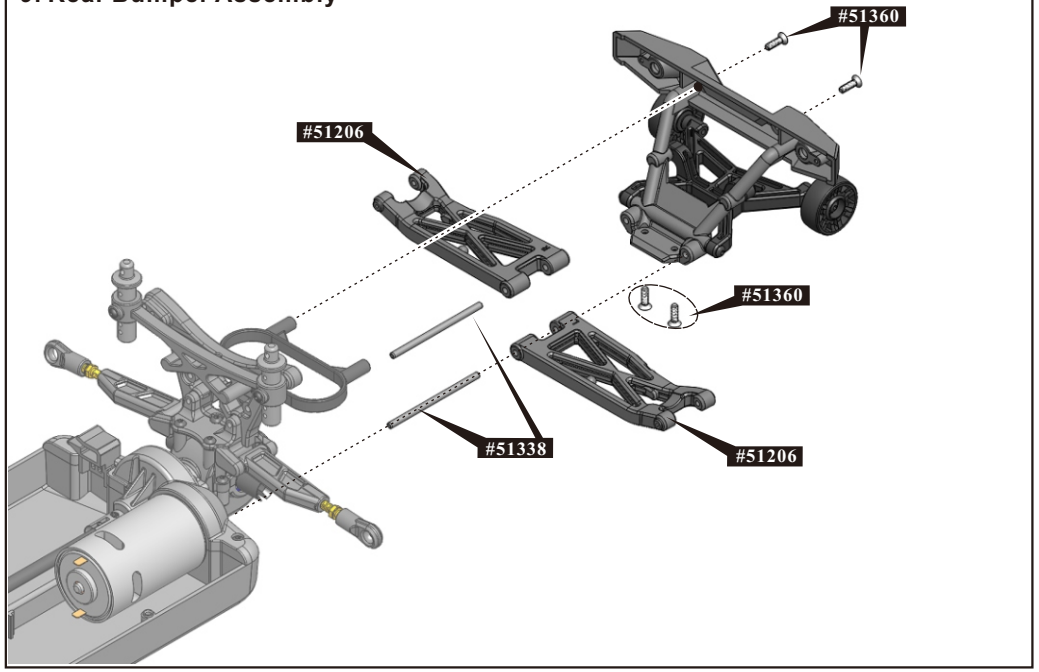

11. Rear Drive Assembly

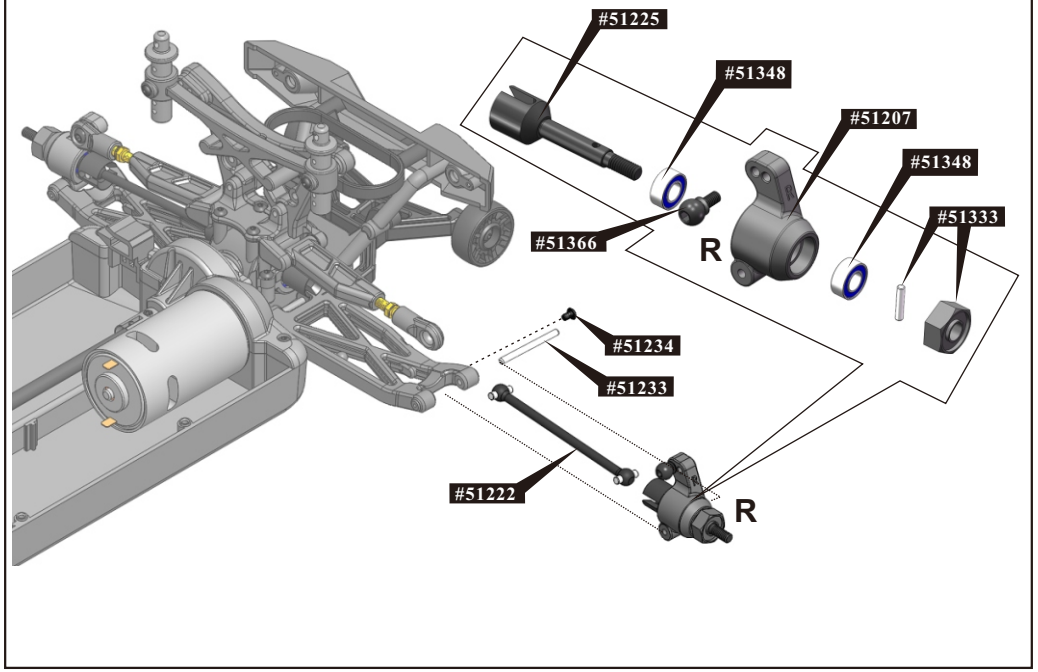

10. Front Drive Assembly

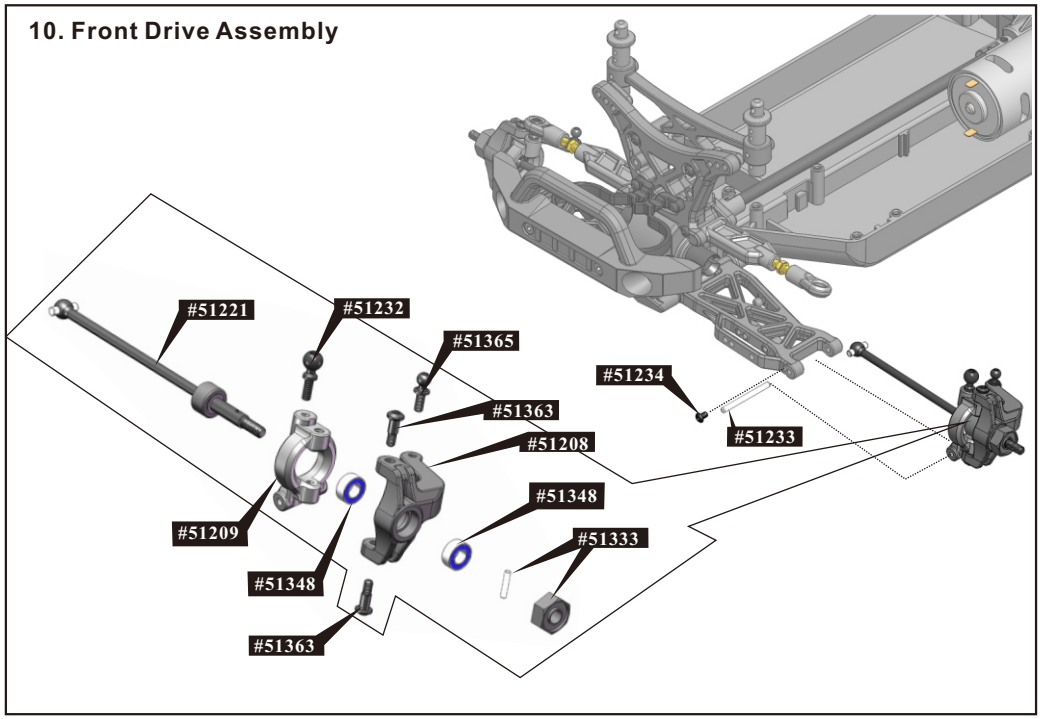

12-1.Shock Absorber Assembly

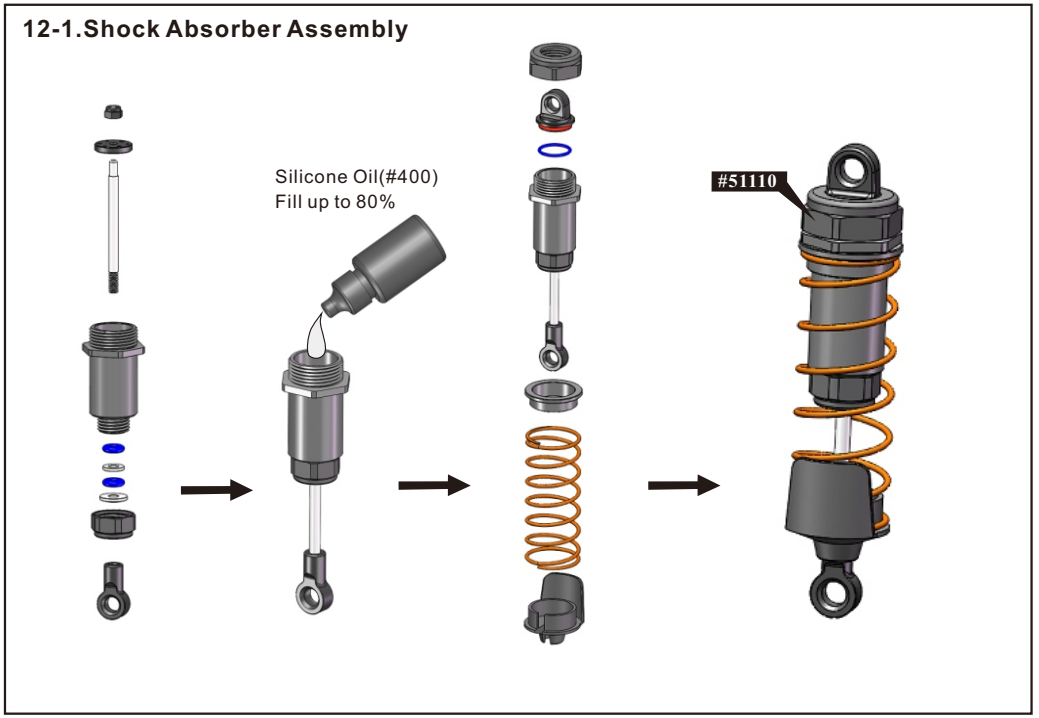

12-2.Shock Absorber Assembly

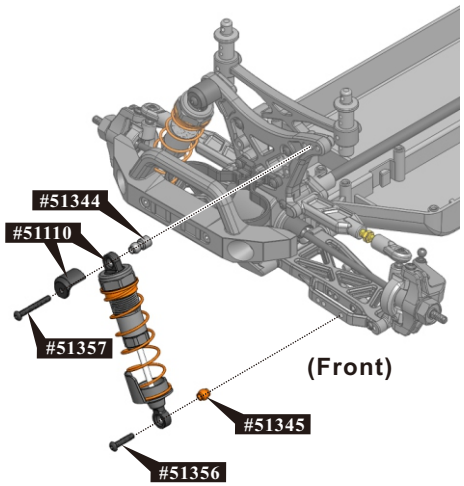

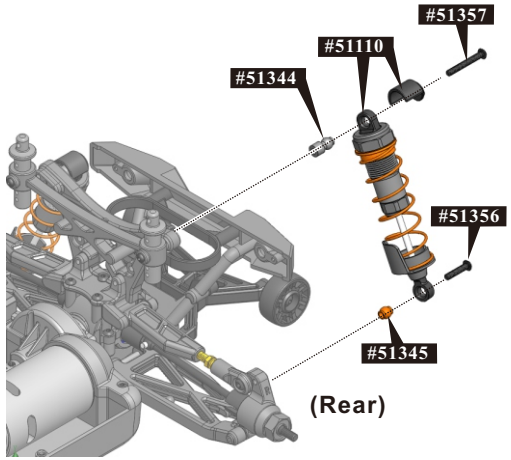

14. Front Support Plates Assembly

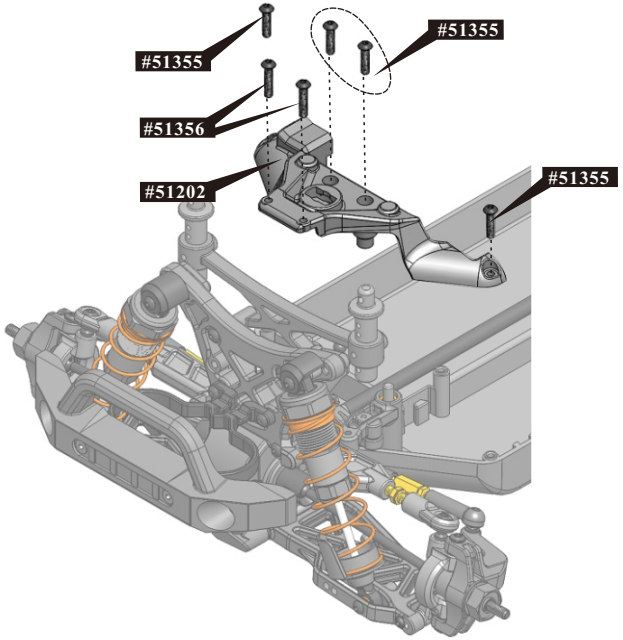

13. Steering Assembly

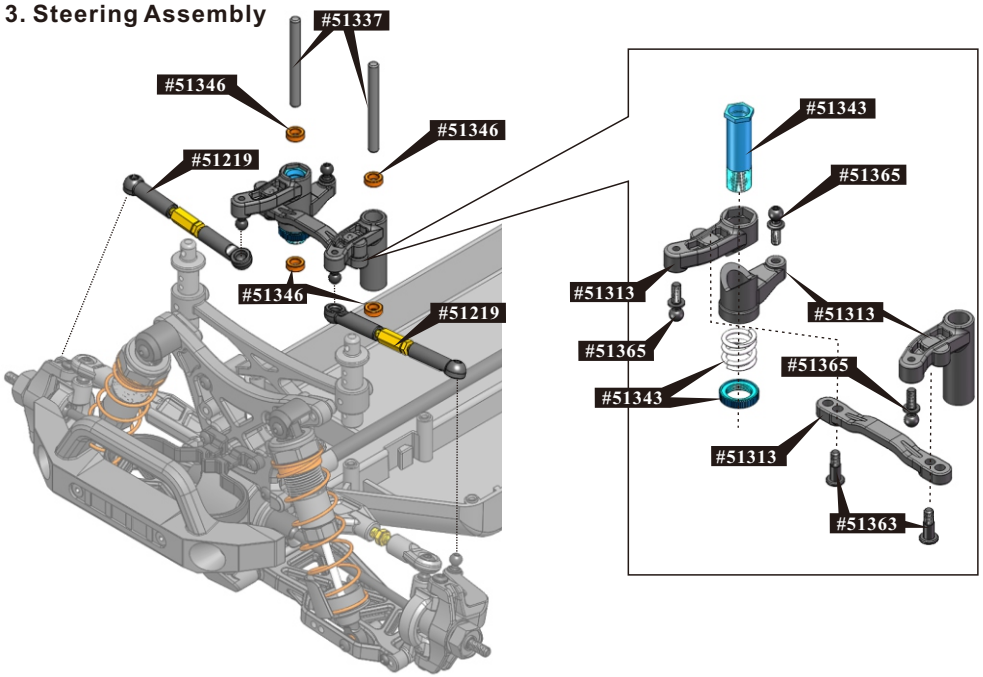

15. Wheels Assembly

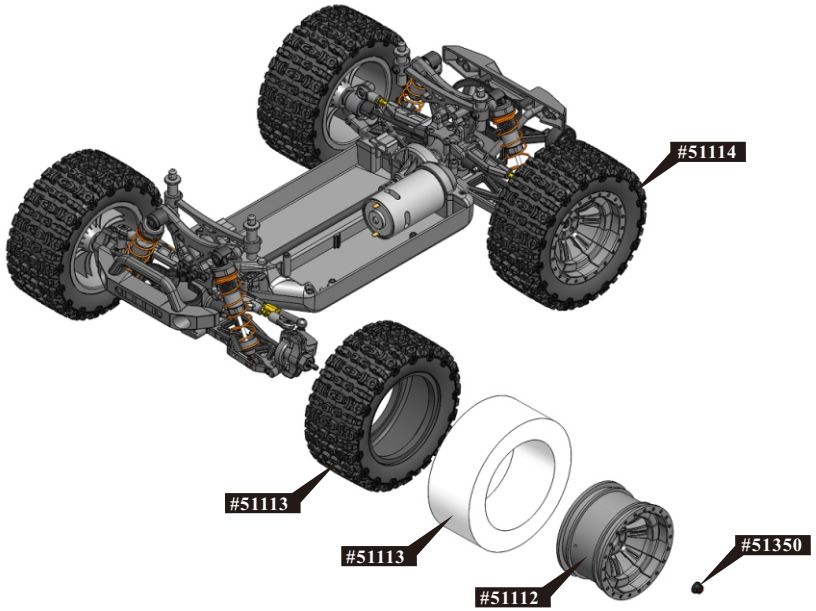

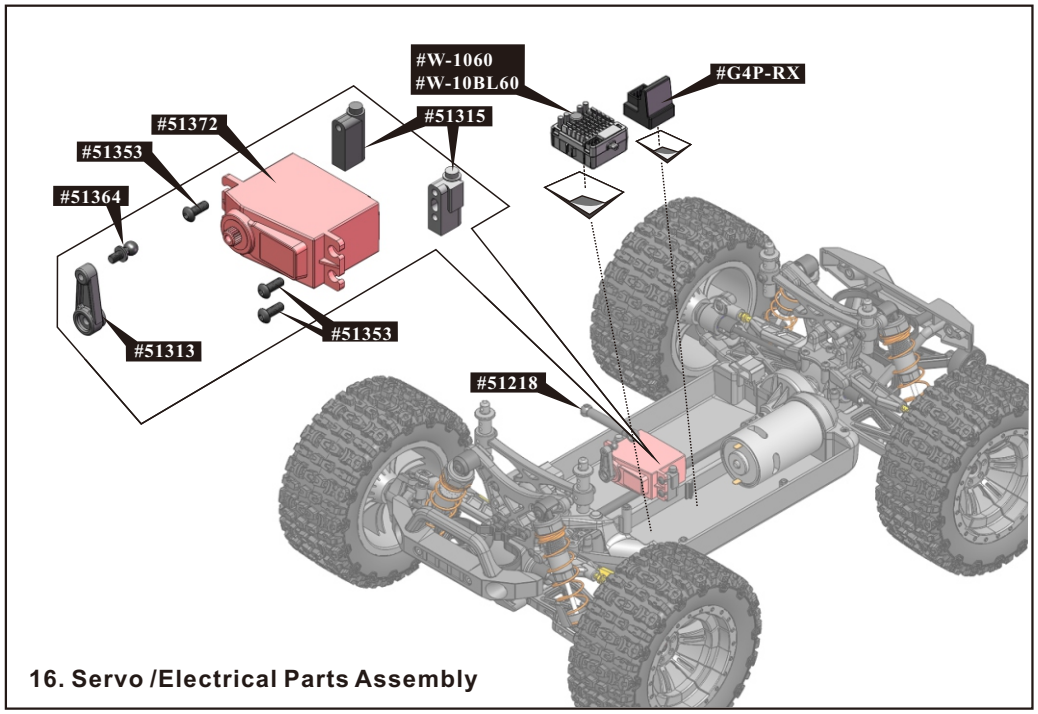

16. Servo /Electrical Parts Assembly

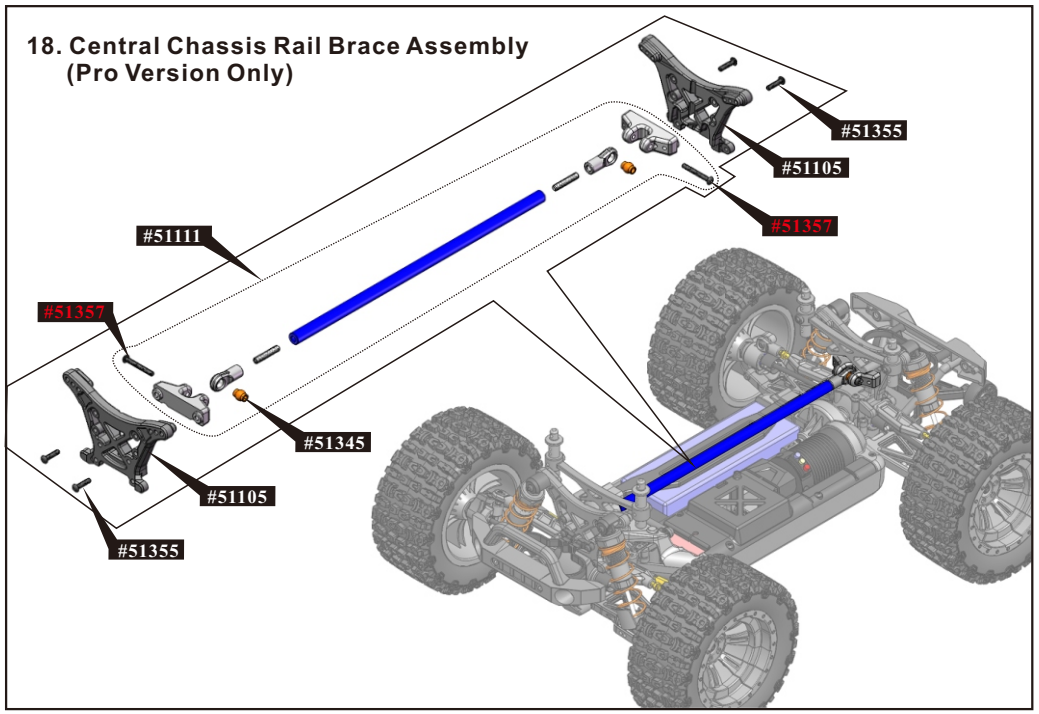

18. Central Chassis Rail Brace Assembly
(Pro Version Only)

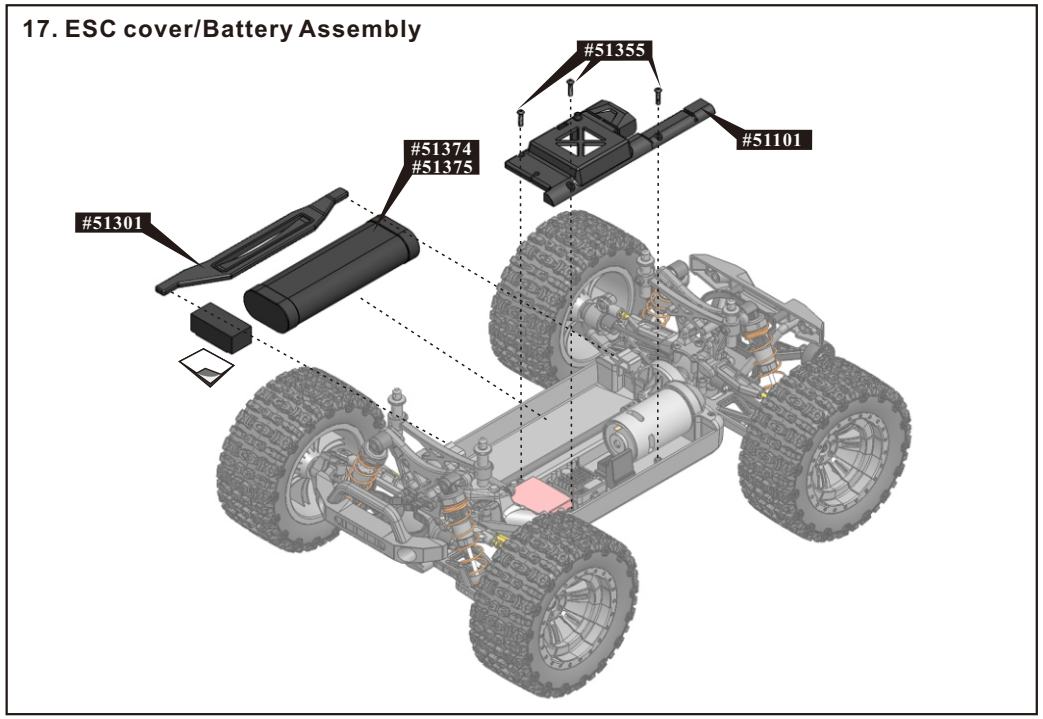

17. ESC cover/Battery Assembly

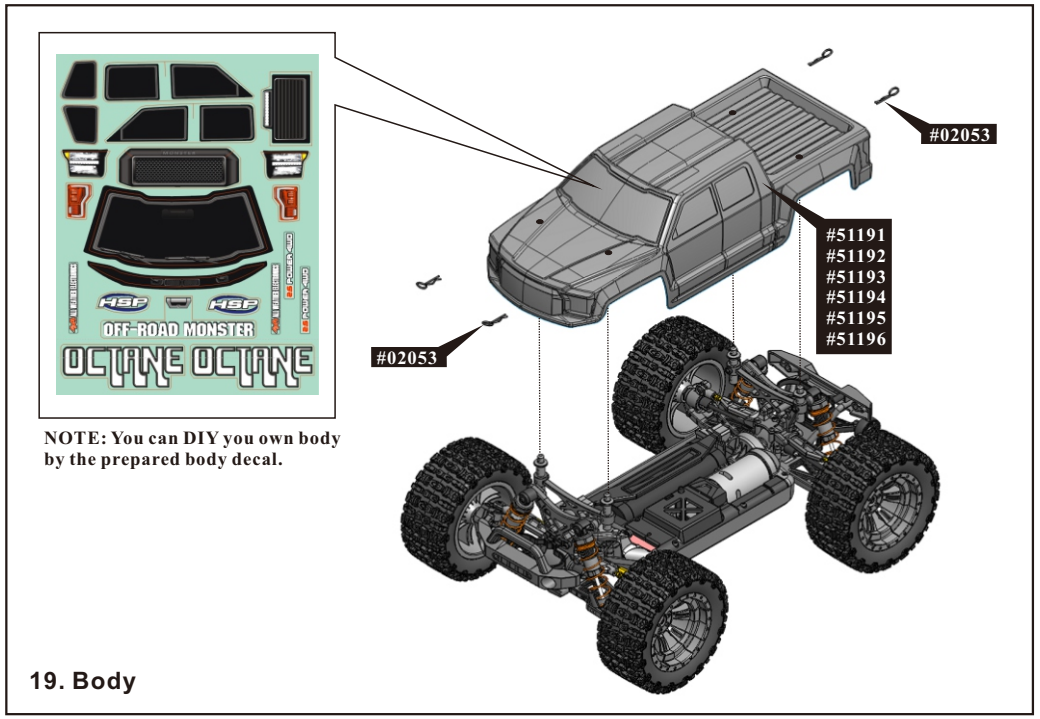

NOTE: You can DIY you own body by the prepared body decal.

19. Body

Spare Part

#51101 ESC Cover	#51102 Front Holder	#51103 Gear Cover	#51104 Gearbox Housing	#51201 Chassis / Battery brace
#51313 F Steering Mount Set / Steering horn	#51315 Servo Mount	#51105 Shock Tower	#51205 (L/R) Front Lower Sway Bar	#51206 (L/R) Rear Lower Sway Bar
#51207 Rear Axle Mount(L/R)	#51208 Steering Mount(L/R)	#51209 Caster Block (R/L)	#51106 R F Bumper (F/R)	#51107 Wheelie
#51108 Post Mount/Body Post	#51237 Shock Mount	#51216 (L/R) Front Upper Sway Arm	#51217 Rear Upper Sway Arm	#51218 Servo Links Set
#51219 Steering Links Set	#51317 Motor Mount	#51318 Diff. Case	#51319 Diff Gears Set	#51320 Diff Main Gear(42T)
#51321 Diff Bevel Gear Set	#51322 Diff Gasket & O Ring	#51323 Cap Joint for Diff.	#51324 Drive Gear(17T)	#51325 Driveshaft Cap Joint-1
#51316 Crown Gear(64T)	#51117 (64T) Diff Main Gear Mefal	#51118 Slipper Clutch	#51235 Slipper Clutch Pads	#51236 Slipper Clutch Post /Spring/Nut

Spare Part

#51225 Wheel axle	#51333 Wheel Hex.W	#51109 M4 Motor Gear(16T)	#51110 Shock Absorber	#51343 Steering Saver Tube & Spring Set (metal)
#51337 Pin 1-4*40	#51338 Pin2-3*54	#51233 Pin3-2.5*30	#51342 Pin 6-2*10	#51341 Pin5-2.5*22
#51327 Driveshaft	#51328 Driveshaft Cap Joint-2	#51221 Front CVD Drive shaft	#51222 70mm Rear shaft	#51220 Central Driveshaft
#51111 (Pro Version Only) Central Chassis Rail Brace	#02053 Body Clip	#51344 Shock Pivot Ball (upper)	#51345 Shock Pivot Ball (lower)	#51346 Φ4*Φ7*2.5 Copper Bearing
#51350 Flange Nut M4	#51348 Φ5*Φ10*4 Ball Bearing 2	#51347 Φ10*Φ15*4 Ball Bearing 1	#51349 E-Clips Φ4.0mm	1.5 #51362 Step Screws M4*10
2.0 #51363 Step Screws 3.5*10	2.0 #51353 Button Head 3*8	2.0 #51354 Button Head 3*10	2.0 #51355 Button Head 3*12	2.0 #51356 Button Head 3*14
2.0 #51238 Button Head 3*20	2.0 #51357 Button Head 3*23	1.5 #51234 Button Head 2.5*4	1.5 #51359 Flat Head 2.5*10	2.0 #51360 Flat Head 3*10

Spare Part

2.0 #51365 Φ4.8*7 Ball Head Screw	2.0 #51364 Φ4.8*5 Ball Head Screw	2.0 #51232 Φ6.8*8 Ball Head Screw	2.0 #51366 Φ6.8*6 Ball Head Screw	#51351 Nylon Nut M2.5
#51112 Wheel Rim	#51113 Tire W/Foam	#51114 Wheel Complete	#51115 Servo-15KG	FS-#G4P
#WP-1060 ESC Brushed-60A	#WP-10BL60 ESC Brushless-60A	#51212 Motor(RC550-8517)	#51371 Brushless Motor 3300kv	#51374 Li-Po Battery 7.4v 3500mAh
#51375 Li-Po Battery 7.4v 3800mAh	#51191 / #51192 #51195 / #51196 #51190-(Clear) PC Body+Stickers	1.5 #51116 Button Head 2.5*12		

Upgradable Optionals

#11184 (64T) Diff Main Gear Mefal (Entry-Level Only)	#513001 Motor Gear (16T/17T /19T /21T)	#512002 L R Rear Axle Mount(AL.)	#512003 L R Steering Mount(AL.)	#512004 R L Caster Block(AL.)

PRODUCT QUALIFICATION CERTIFICATION

The product has conducted IQC (Input Quality Control) and full inspection before delivery. The manufacturer is responsible for quality assurance. Remote Control model is assembled manually, and then there may have some defects in the production process. Once the product is modified or incorrect operation, it cannot apply for replacement and return services, for the parts and accessories may be damaged.
Please contact the retail seller for after-sales service when needed.
The product conforms to technical requirements of export safety regulations.

Notes:
- ⇨ **Read and understand the instructions carefully before operating or assembling your racing model.**
- ⇨ **Specifications are subject to change without prior notice, and actual received model may vary from the images and/or descriptions in this manual.**

Factory Address: Huang Jiang Town, Dong Guan City,Guang Dong Province, China

Production Date: refer to packing instruction

CE ROHS