Specifications

Standard Version:

Item No.	94512	Wheel	85*32(F)*42(R)mm	Motor	RC550-8517
Item Name	VORTEX	Main Material	Plastic/Hardware/Rubber	Servo	6kg
Scale	1/10	Radio/Rx	G4P-2.4G/4CH	Speed	>30kn
Desciption	RTR-Off-Road	R/C Distance	>110	Weight	1698g
Length	400mm	Transmitter Battery	AA 4P	Gead Ratio	1:8.33
Width	260mm	Battery Pack	7.4V 3500mAH	Body Color	PC
Height	235mm	Running Time	>25min	Gift Box Size	455*285*165mm
Wheel Base	280mm	Charger Spec	11.1/7.4V800mA (Euro/UK/USA)	Piece per Carton	4P
Ground Clearance	26mm	Electronic Speed Control	WP-1060 / 60A	Certification	EN71,RoHS,CE,FCC
AdjustableSteering Link	✗	Main Gear with Slipper Function	✗	AdjustableUpper Sway Bar	✗

Brushless Version:

Item No.	94512PRO	Wheel	85*32(F)*42(R)mm	Motor	3652/3300kv
Item Name	VORTEX	Main Material	Plastic/Hardware/Rubber	Servo	6kg
Scale	1/10	Radio/Rx	G4P-2.4G/4CH	Speed	>50kn
Desciption	RTR-Off-Road	R/C Distance	>110	Weight	1760g
Length	400mm	Transmitter Battery	AA 4P	Gead Ratio	1:8.33
Width	260mm	Battery Pack	7.4V 38000mAH	Body Color	PC
Height	235mm	Running Time	>25min	Gift Box Size	455*285*165mm
Wheel Base	280mm	Charger Spec	11.1/7.4V800mA (Euro/UK/USA)	Piece per Carton	4P
Ground Clearance	26mm	Electronic Speed Control	WP-10BL50 / 50A	Certification	EN71,RoHS,CE,FCC
AdjustableSteering Link	✓	Main Gear with Slipper Function	✓	AdjustableUpper Sway Bar	✓

Assembly Steps

1. Diff. Gear Assembly

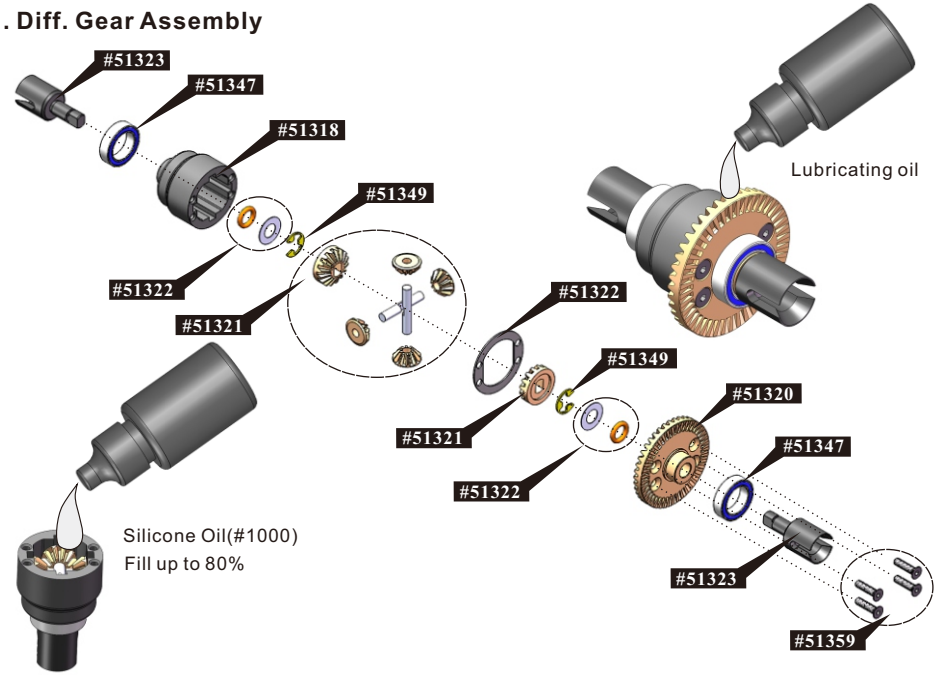

2.Spur Gear Assembly

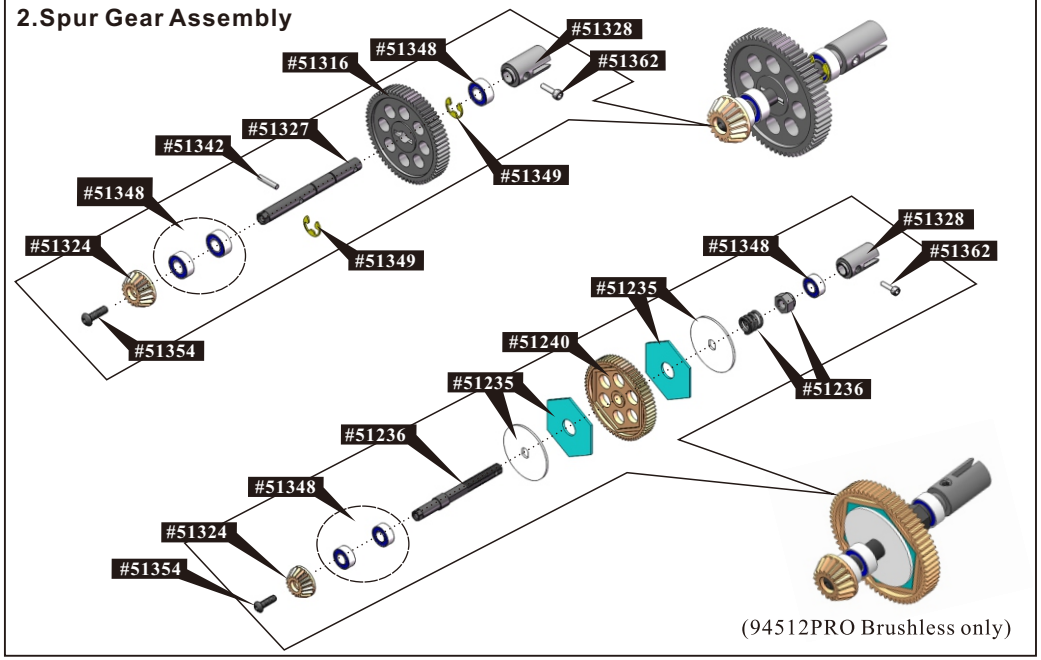

2. Diff Case/ Driveshaft Assembly

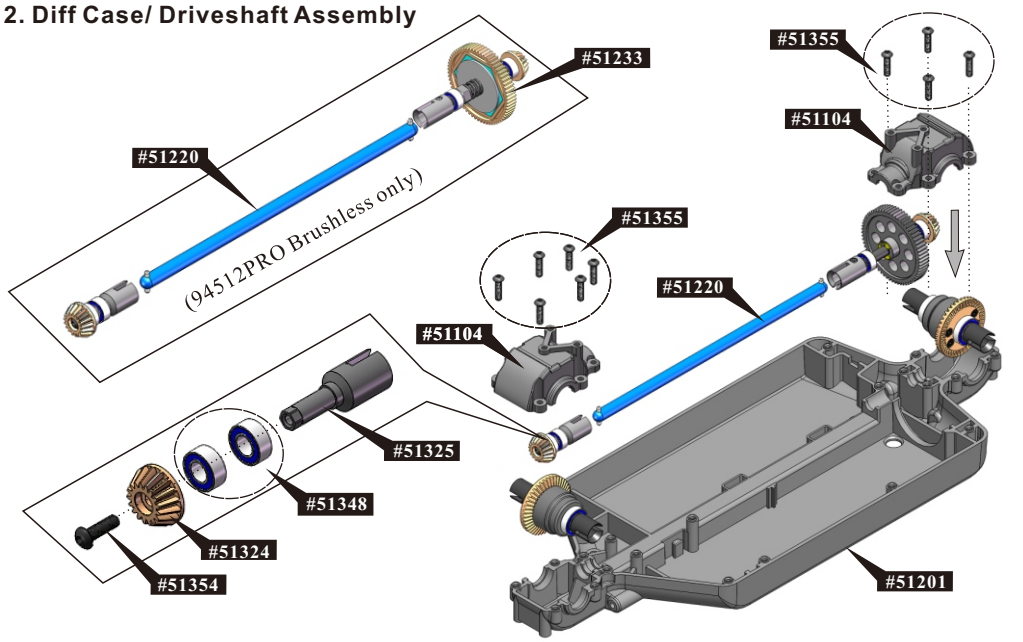

3. Motor Assembly

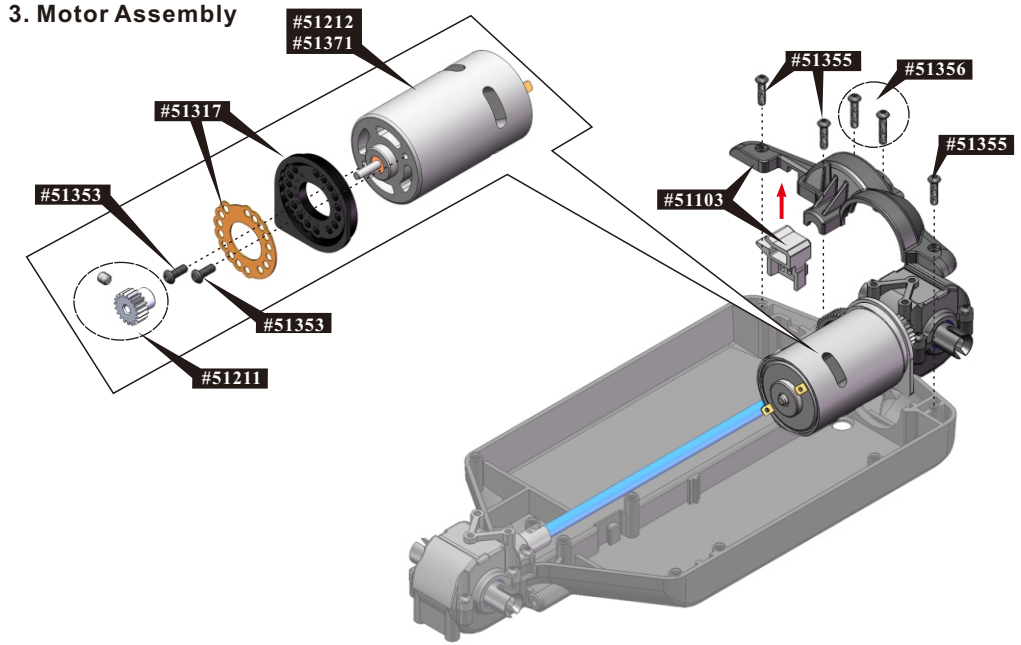

4-1. Front Shock Tower Assembly

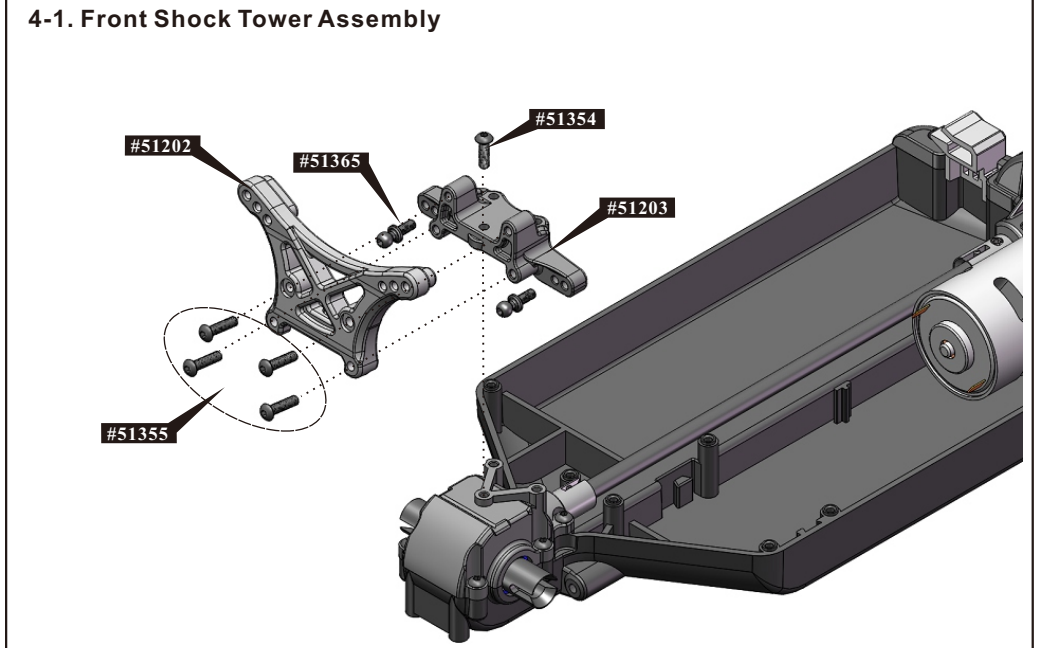

4-2. Front Shock Tower Assembly (94512PRO Brushless only)

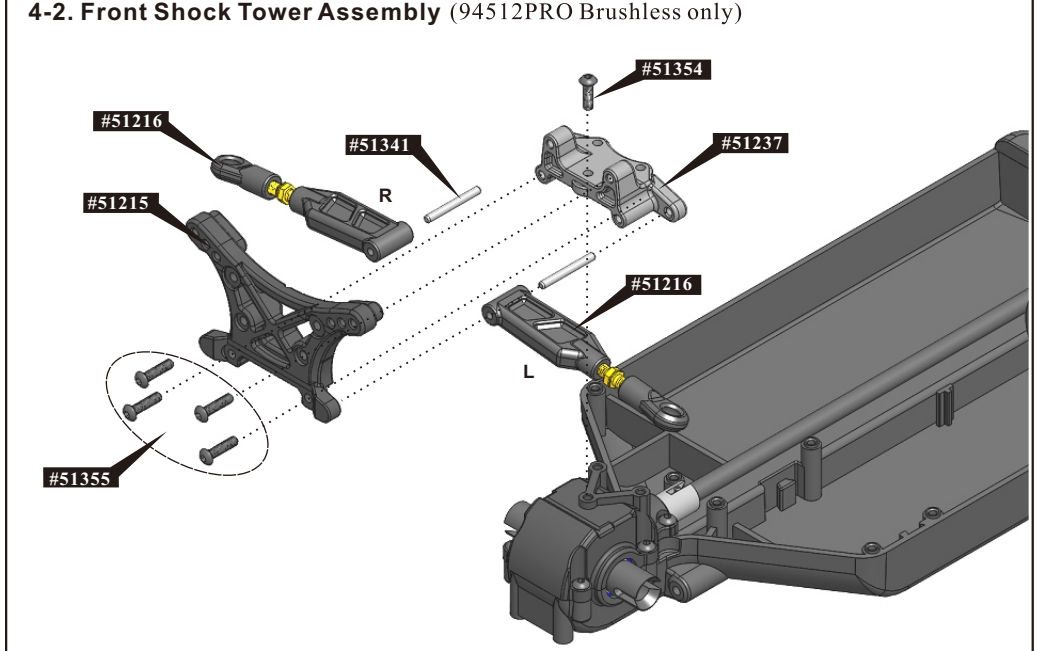

5-1. Rear Shock Tower Assembly

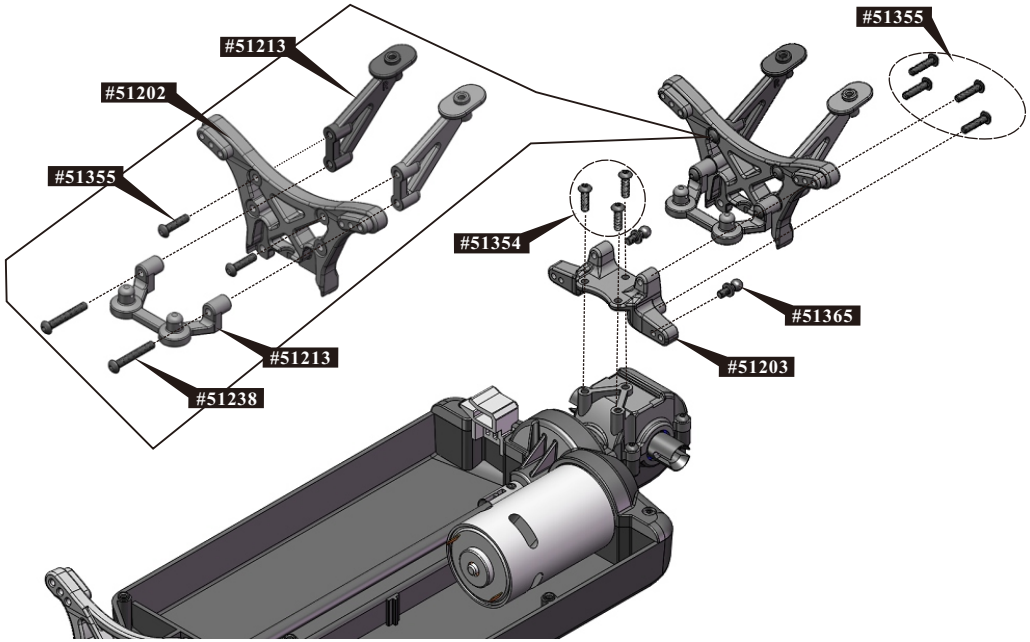

6. Front Bumper Assembly

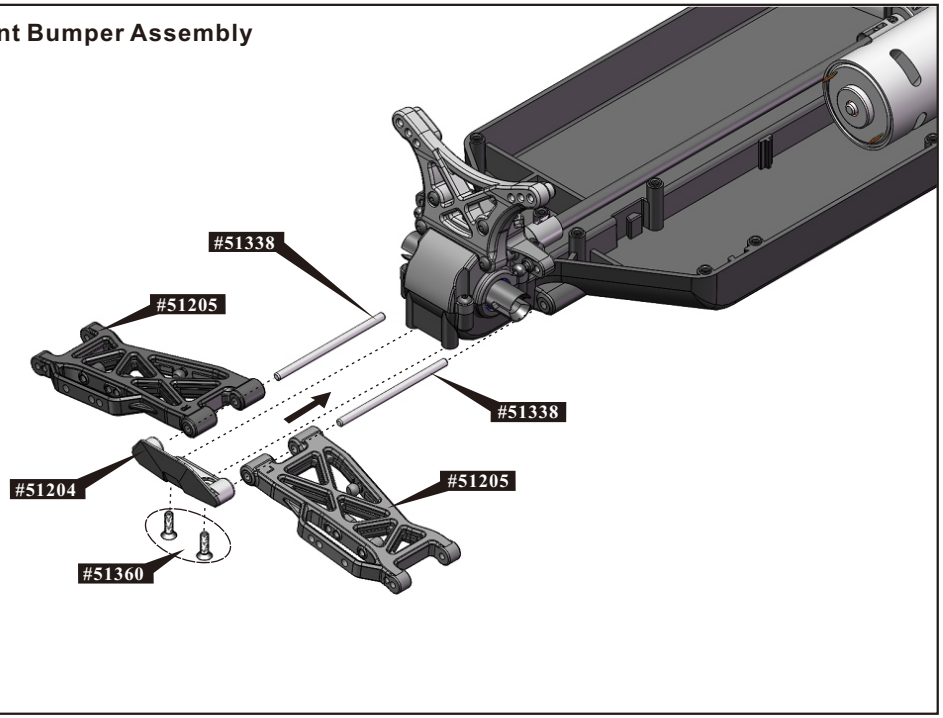

5-2. Rear Shock Tower Assembly (94512PRO Brushless only)

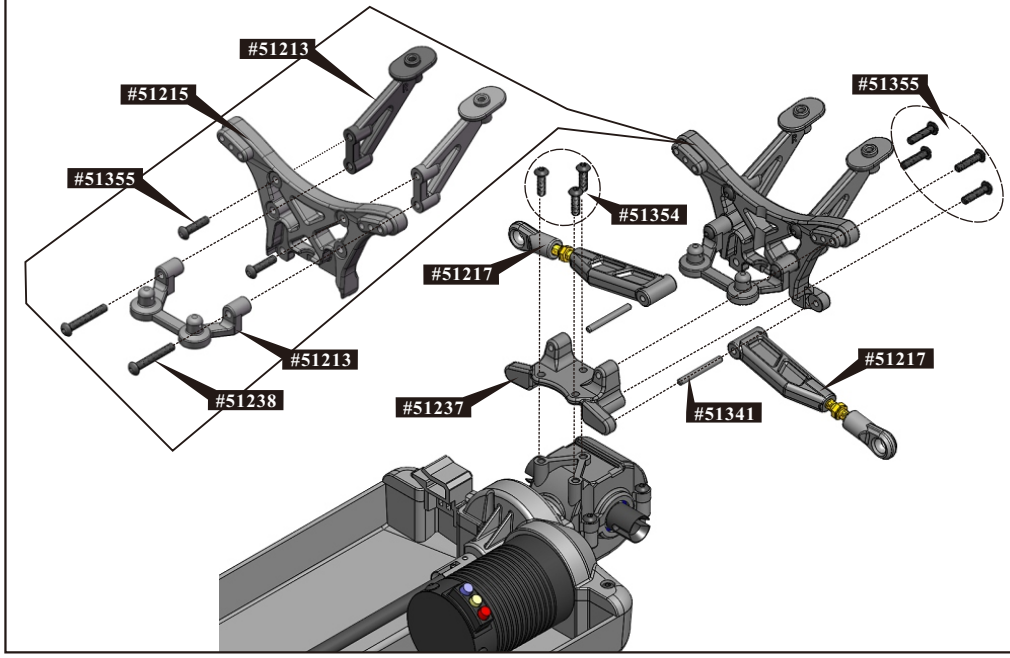

7. Rear Bumper Assembly

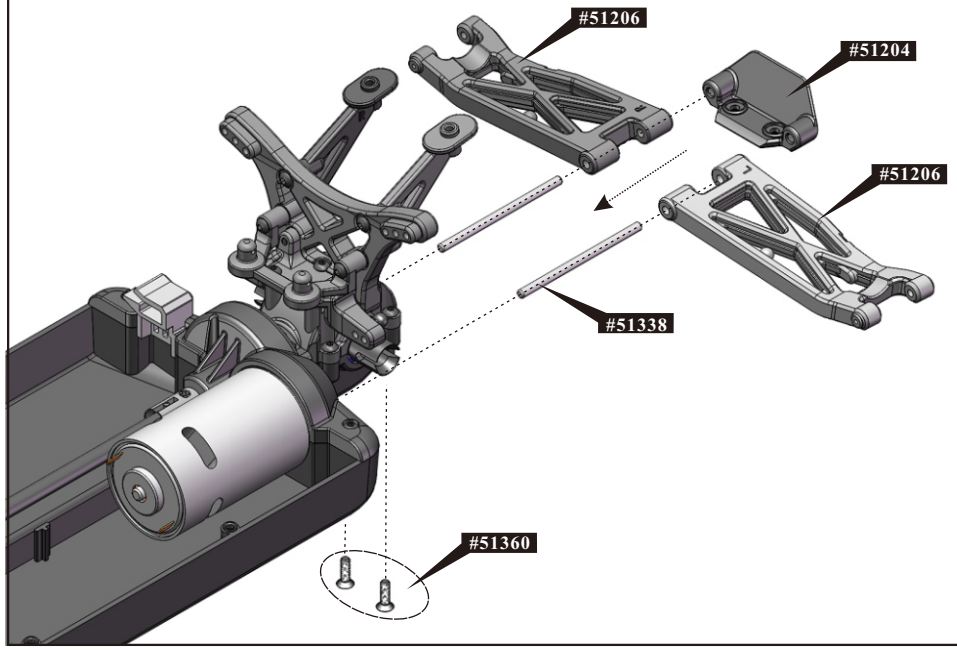

9-1. Front Drive Assembly

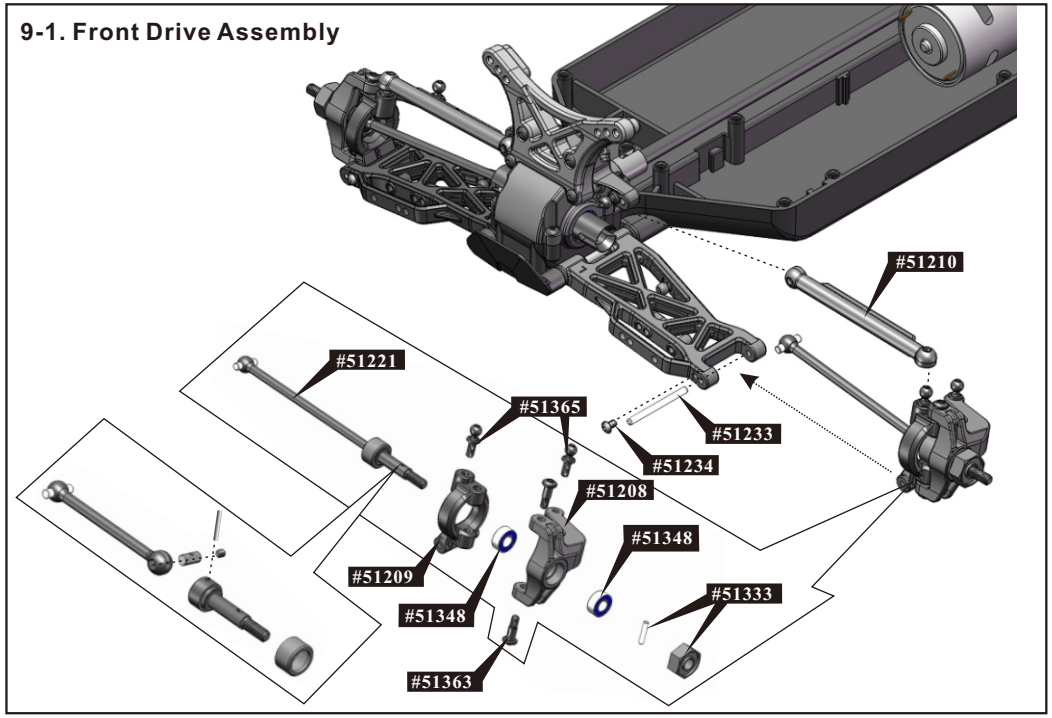

10-1. Rear Drive Assembly

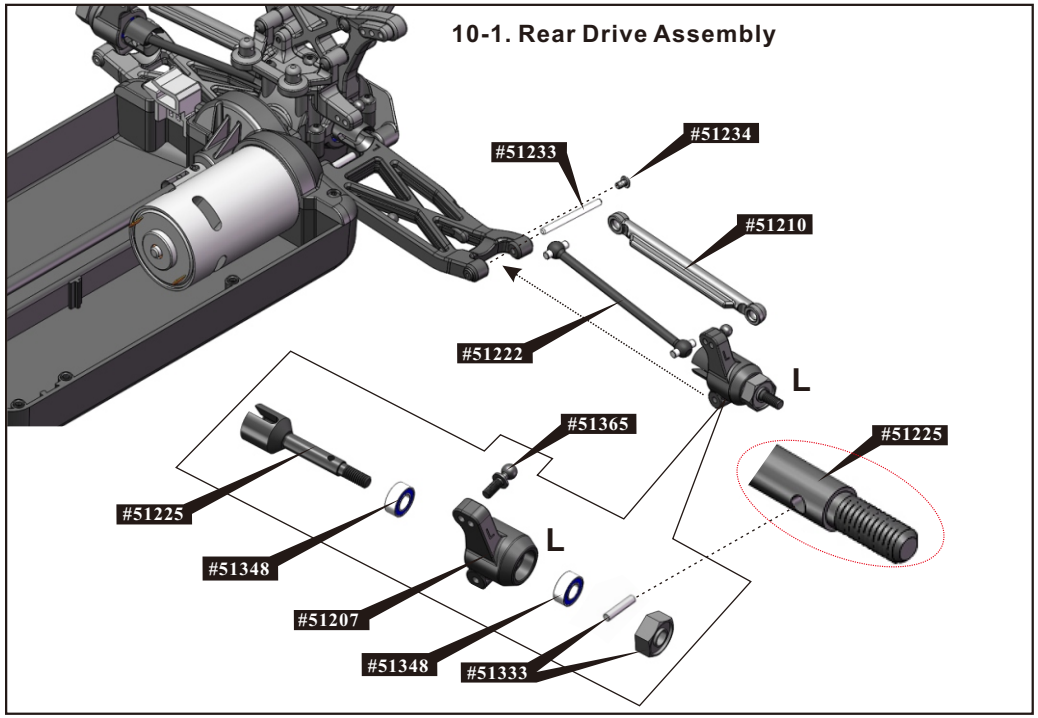

9-2. Front Drive Assembly

(94512PRO Brushless only)

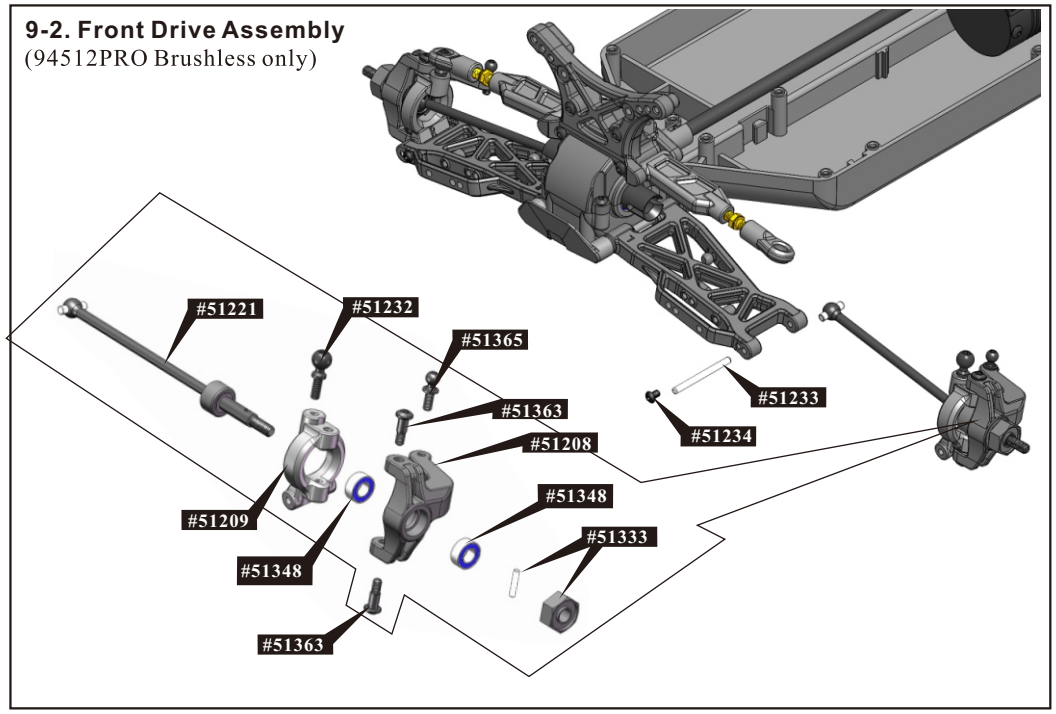

10-2. Rear Drive Assembly

(94512PRO Brushless only)

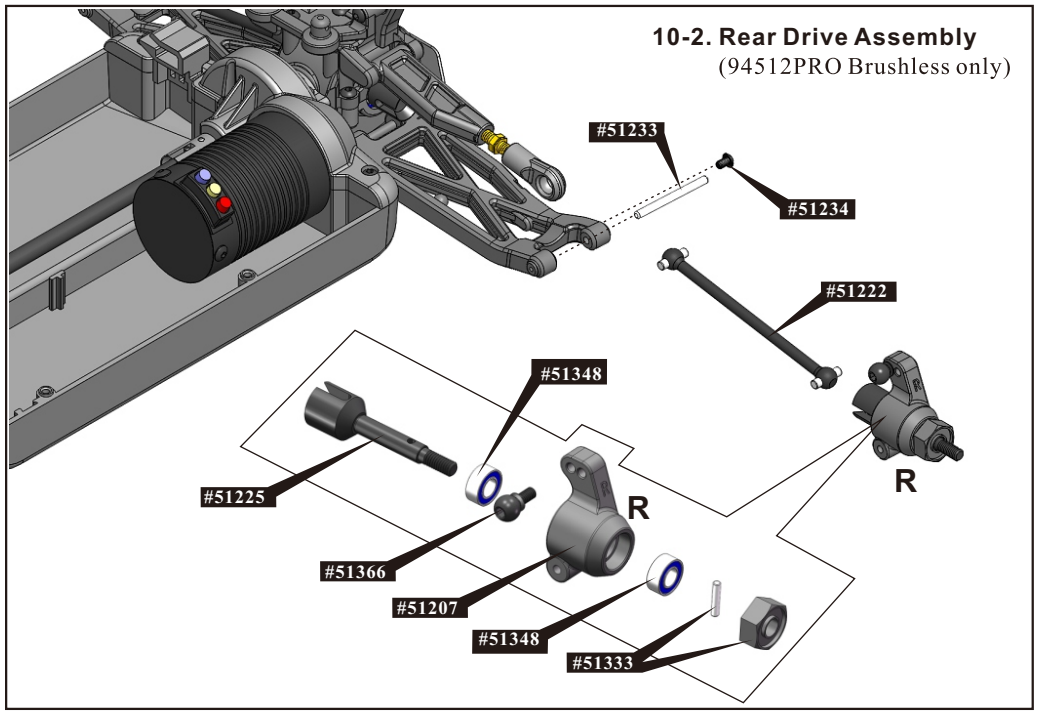

11-1.Shock Absorber Assembly

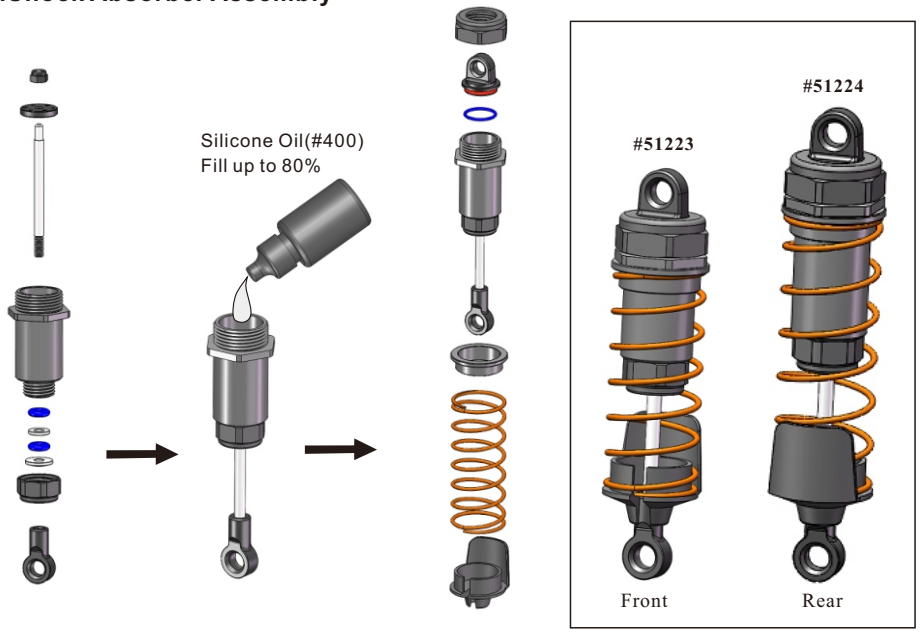

12. Steering Assembly

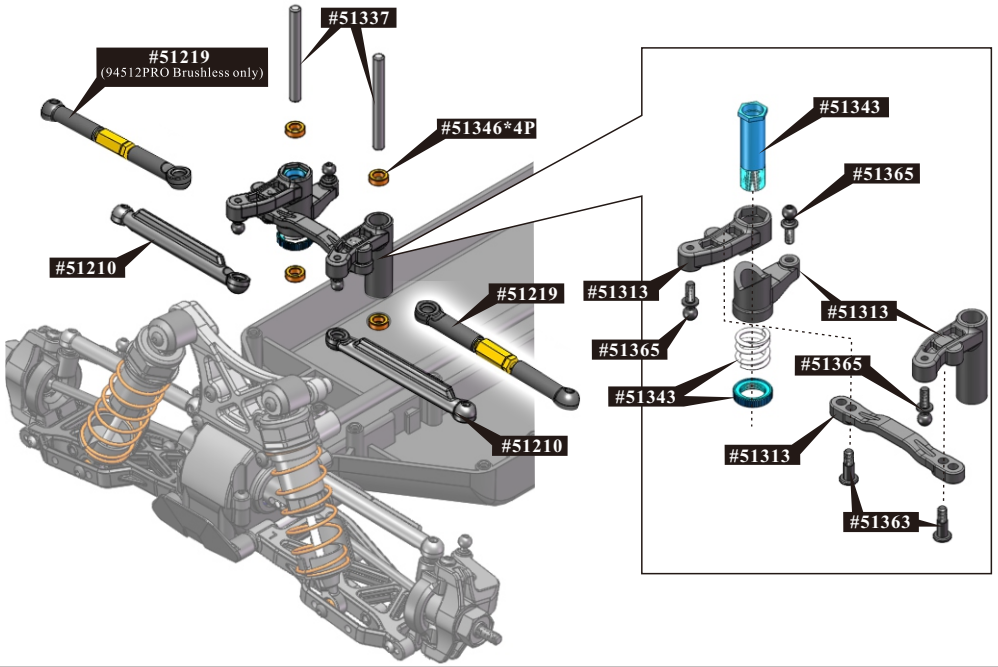

11-2.Shock Absorber Assembly

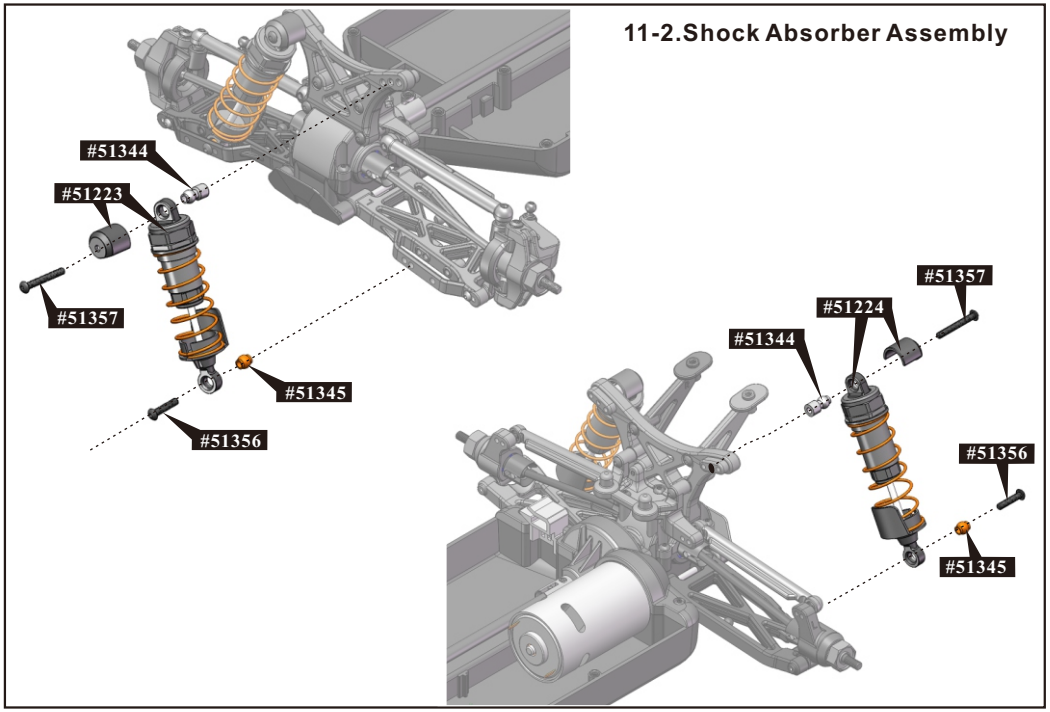

13. Front Support Plates Assembly

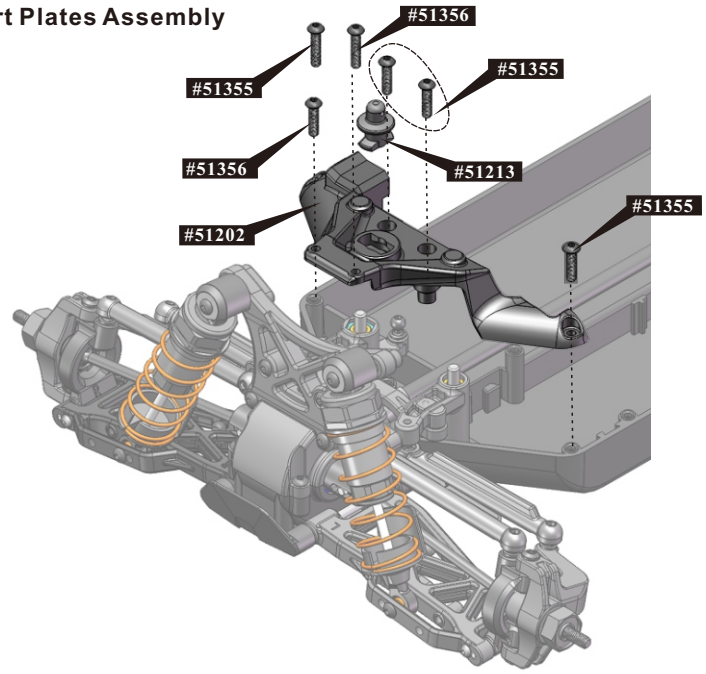

14. Wheels Assembly

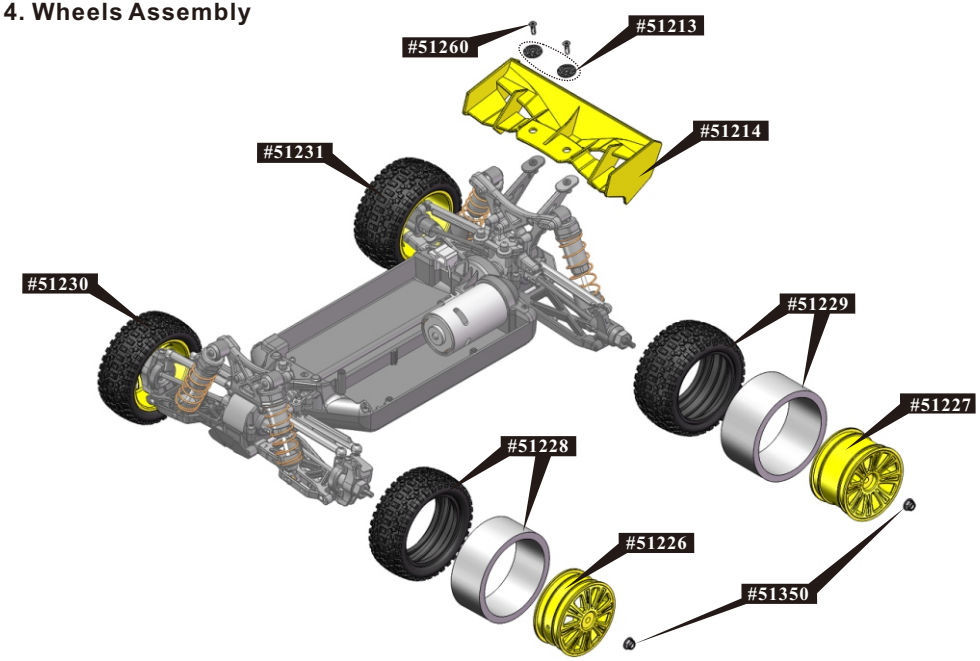

16. ESC cover/Battery Assembly

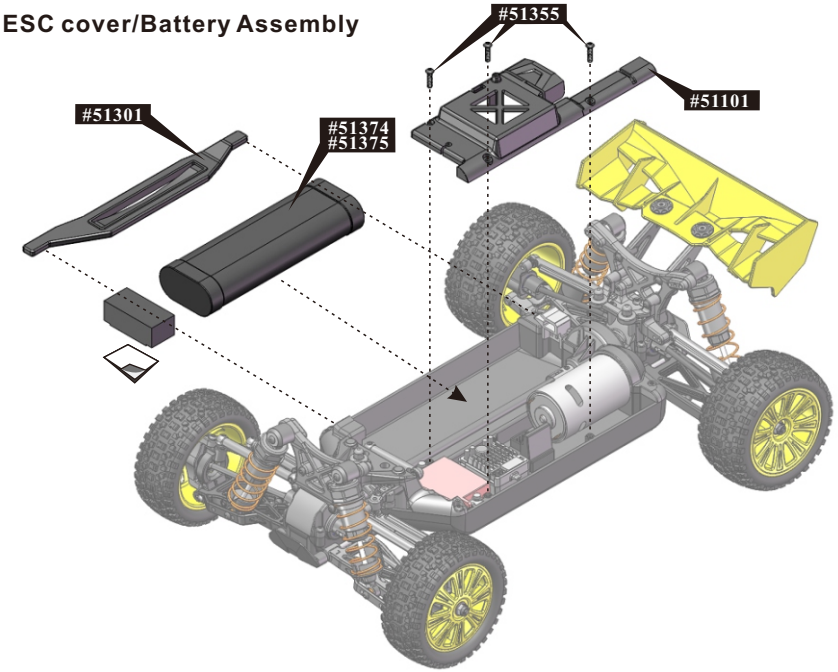

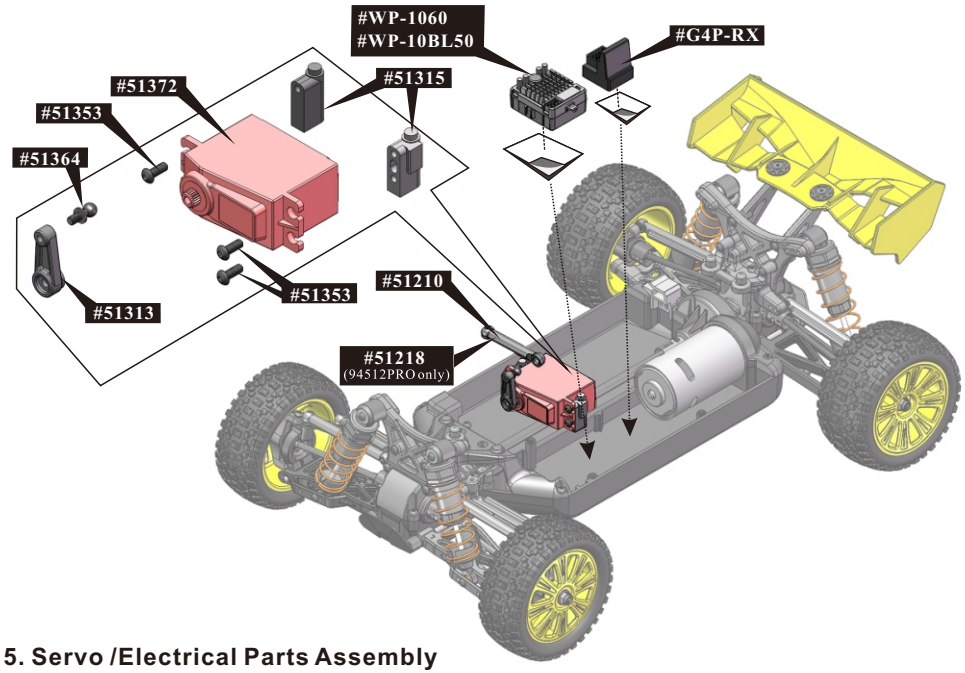

15. Servo /Electrical Parts Assembly

17. Body

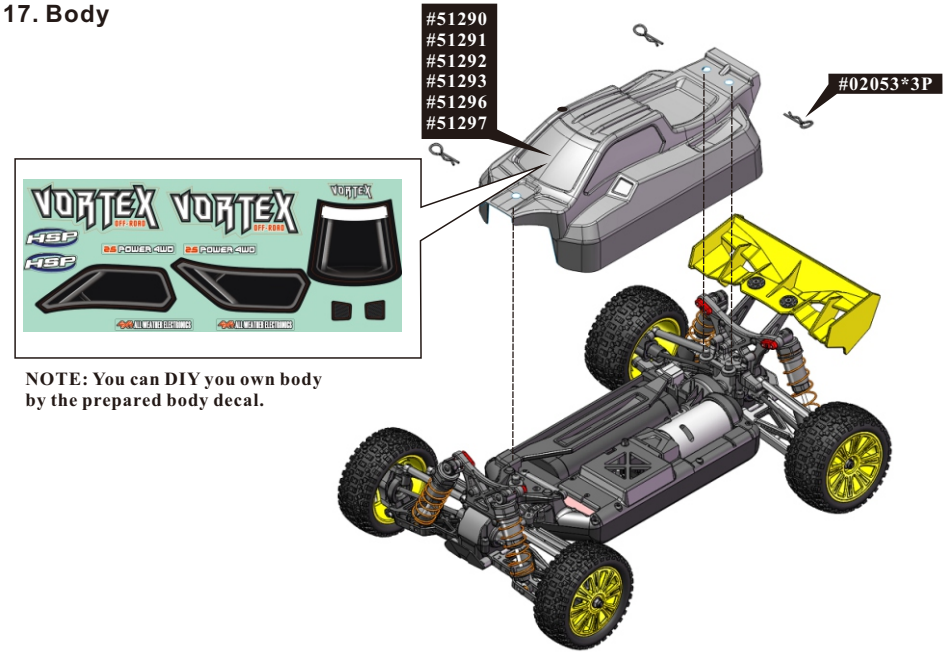

NOTE: You can DIY you own body by the prepared body decal.

Spare Part

#51101 ESC Cover	#51102 Front Holder	#51103 Gear Cover	#51104 Gearbox Housing	#51201 Chassis / Battery brace
#51313 F Steering Mount Set / Steering horn	#51315 Servo Mount	#51204 Bumper	#51205 (L/R) Front Lower Sway Bar	#51206 (L/R) Rear Lower Sway Bar
#51207 Rear Axle Mount(L/R)	#51208 Steering Mount(L/R)	#51209 Caster Block (R/L)	#51213 Body Post/Wing Brace	#51214 Wing
#51317 Motor Mount	#51318 Diff. Case	#51319 Diff Gears Set	#51320 Diff Main Gear(42T)	#51321 Diff Bevel Gear Set
#51322 Diff Gasket & O Ring	#51323 Cap Joint for Diff.	#51324 Drive Gear(17T)	#51325 Driveshaft Cap Joint-1	#51316 Crown Gear(64T)
#51327 Driveshaft	#51328 Driveshaft Cap Joint-2	#51221 Front CVD Drive shaft	#51222 70mm Rear shaft	#51220 Central Driveshaft
#51223 Front Shock Absorber	#51224 Rear Shock Absorber	#51225 Wheel axle	#51333 Wheel Hex.W	#51226 Front Wheel Rim

Spare Part

#51227 Rear Wheel Rim	#51228 FrontTire W/Foam	#51229 Rear Tire W/Foam	#51230 Front Wheel Complete	#51231 Rear Wheel Complete
#51337 Pin 1-4*40	#51338 Pin2-3*54	#51233 Pin3-2.5*30	#51342 Pin 6-2*10	#51343 Steering Saver Tube & Spring Set (metal)
#51349 E-Clips Φ4.0mm	#51344 Shock Pivot Ball (upper)	#51345 Shock Pivot Ball (lower)	#51346 Φ4*Φ7*2.5 Copper Bearing	#51347 Φ10*Φ15*4 Ball Bearing 1
#51348 Φ5*Φ10*4 Ball Bearing 2	#02053 Body Clip	#51350 Flange Nut M4	#51351 Nylon Nut M2.5	1.5 #51362 Step Screws M4*10
2.0 #51363 Step Screws 3.5*10	2.0 #51353 Button Head 3*8	2.0 #51354 Button Head 3*10	2.0 #51355 Button Head 3*12	2.0 #51356 Button Head 3*14
2.0 #51238 Button Head 3*20	2.0 #51357 Button Head 3*23	1.5 #51234 Button Head 2.5*4	1.5 #51359 Flat Head 2.5*10	2.0 #51360 Flat Head 3*10
2.0 #51365 Φ4.8*7 Ball Head Screw	2.0 #51364 Φ4.8*5 Ball Head Screw	#51211 M4 Motor Gear(19T)	#51372 Servo-6KG	#51212 Motor(RC550-8517)

Spare Part

#51202 F R Shock Tower	#51203 Shock Mount	#51210 Links Set	#WP-1060 ESC Brushed-60A	FS-#G4P
#51290-Orange #51291-Green PC Body+Stickers	#51374 Li-Po Battery 7.4v 3500mAh	#51376 Charger (Li-Po)		

Spare Part (94512PRO Brushless only)

#51215 F R Shock Tower	#51237 Shock Mount	#51216 (L/R) Front Upper Sway Arm	#51217 Rear Upper Sway Arm	#51218 Servo Links Set
#51219 Steering Links Set	#51341 Pin5-2.5*22	2.0 #51232 Φ6.8*8 Ball Head Screw	2.0 #51366 Φ6.8*6 Ball Head Screw	#51371 Brushless Motor 3300kv
#W-10BL50 ESC Brushless-50A	#51375 Li-Po Battery 7.4v 3800mAh	#51296-B/R #51297-O/G #51200-Clear PC Body+Stickers	#51239 Slipper Clutch	#51240 (64T) Diff Main Gear Mefal
#51235 Slipper Clutch Pads	#51236 Slipper Clutch Post /Spring/Nut			

Upgradable Optionals

#11184 (64T) Diff Main Gear Mefal (Brushed only)	#513001 Motor Gear (16T/17T /19T /21T)	#512002 L R Rear Axle Mount(AL.)	#512003 L R Steering Mount(AL.)	#512004 R L Caster Block(AL.)

PRODUCT QUALIFICATION CERTIFICATION

The product has conducted IQC (Input Quality Control) and full inspection before delivery. The manufacturer is responsible for quality assurance. Remote Control model is assembled manually, and then there may have some defects in the production process. Once the product is modified or incorrect operation, it cannot apply for replacement and return services, for the parts and accessories may be damaged.
Please contact the retail seller for after-sales service when needed.
The product conforms to technical requirements of export safety regulations.

Notes:

- Read and understand the instructions carefully before operating or assembling your racing model.
- Specifications are subject to change without prior notice, and actual received model may vary from the images and/or descriptions in this manual.

Factory Address: Huang Jiang Town, Dong Guan City,Guang Dong Province, China

Production Date: refer to packing instruction

ROHS