1/5th 4WD Electric Power R/C Rock Crawler

Specifications:

LENGTH	WIDTH	HEIGHT	WHEEL BASE	DRIVE SYSTEM	DIAMETER OF WHEEL	WIDTH OF WHEEL	Gear Ratio
840mm	436mm	350mm	650mm	4WD Shaft Drive	182mm	82mm	1:48.15

Spare Part

59011- "X"-Type Side Guard	59012-Shock Absorber Set(F/R)	59013-Side Linkage ϕ175mm	59014-Center Linkage (F/R) ϕ150mm
59015-Motor(RC550) W/Gear(12T)	59016-Adapter Set W/Shaft Pins (3*17.8mm)	59017-Diff. Gear (54T/15T)(49T/15T) (49T)	98011-Gear Box W/Gear Box Cover W/Motor Plate
98007-Side Guard Post 100mm	98009-Link Mount	98010-Steering Link 80*6.0mm	98019-Driven Case (Left)
98020-Driven Case (Right)	98022N-Servo Mount	98023- Susp.Arm Mount (F/R)	98049-Rims
99005-Tire Secure Ring (9 holes)	98100-Outer Tire Secure Ring(ABS)	98101-Tire W/Foam	98102-Pre-Mounted Tire Set (Left) (Right)

Spare Part

98028-Caster Mounts (Left)(Right)	98029-Steering Arm W/Steel Ring	98031-Drive Left Shaft (Short)	98032-Drive Right Shaft (Long)
98033-Gear Shaft (Long) (Short)	98090-Adjustable Linkage	98092-Conner Linkage 210*6.0mm	98034-Wheel Axle
98035-Wheel Nuts	98097- Body Post Fixture	98098- Battery Box W/ Cover	98099-Body Posts
20131-Post	03019-Battery (7.2V 3000mAh)	98120-Electronic Speed Controller (Waterproof)	Sp9002-Servo(9kg) (Waterproof)
Sp1502-Servo(15kg) (Waterproof) (Optional)	28475-Receiver(2.4G) (Waterproof)	98041- Balls ϕ 7.8mm	98042- Ball Stand ϕ 6.8mm
98043-Balls Stand ϕ6.8mm	98044-Ball Stand ϕ 7.8mm	98046- Bushing 5*8*2.5mm	98052-Ball Bearings 6*12*4mm
98053-Ball Bearings 8*16*5 mm	98054-Ball Bearings 12*18*4mm	02053-R- Clip	85734-Body Pins

Spare Part

02102-Nylon Nuts M3	98056-E-Clips 7.0mm	98084-Repairing Kit	98058-Set Screws 3*25 4P
02098-Set Screws 3*4 8P	85834-Set Screws M5*4 6P	18091-Cap Head Machine Screw 3*6 8P	98081-Cap Head Machine Screw 4*20 4P
98069-Cap Head Machine Screw 4*8 8P	98082-Cap Head Machine Screw 3*28 4P	98064-Cap Head Machine Screw3*12 8P	98068-Cap Head Machine Screw 3*8 8P
98065-Cap Head Machine Screw 3*18 6P	98066-Cap Head Machine Screw 3*14 6P	98067-Cap Head Machine Screw 3*4 4P	98106-Column Head Self-Tapping Screw3*6 14P
98071-Column Head Machine Screw 3*22 6P	98072-Column Head Machine Screw 3*24 4P	98073-Column Head Machine Screw 4*12 4P	98078-Column Head Machine Screw 3*18 6P
98079-Column Head Machine Screw 3*28 4P	98080-Column Head Machine Screw 3*44 4P	98075-Countersink Head Machine Screw 4*24 8P	98076-Countersink Head Machine Screw M4*14 4P
18113-Round Head Machine Screw 3*6mm 8P	85844-Ring Head Self Tapping Srcews 3*8 4P	98107-Complete Set Of Screw(10 Piece For Each Kind Of Screw)	

Optionals

880002-AL.Caster Mounts (Left 2P)(Right2P)+Column Head Machine Screws4*12 mm*4P+Cap Head Machine Screws3*10mm*8P	880003-Alum.Steering Arm 4P+ Ring 4P	880007-Alum.Servo Mount 2P/Cap Head Machine Screws 4*8*2P	880008-Alum.Susp.Arm Mount(F/R) 4P/Flat Head Machine Hex. Screws 4*24mm*4P
880010-Alum.Link Mount 2P/Cap Head Machine Screws3*14mm*8P	880014-AL. Tire Secure Ring 2P/Column Head Self Tapping Hex.Screws 3*6mm*36P	880020- Battery Box (AL.)/Flat Head Machine Screws 3*8mm*8P	880021- Battery Box Cover (AL.)/R-Pins 2P
880022- Body Post Fixture(AL.) 2P/Column Head Hex. Screws 3*8 *4P	880023-Body Posts (AL.) 4P/Cap Head Machine Screws 3*12mm*4P		

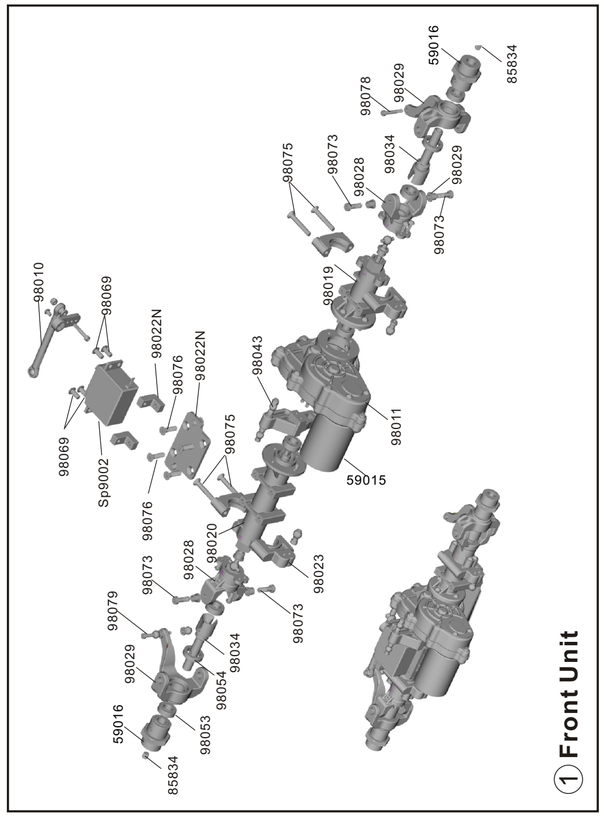

① Front Unit

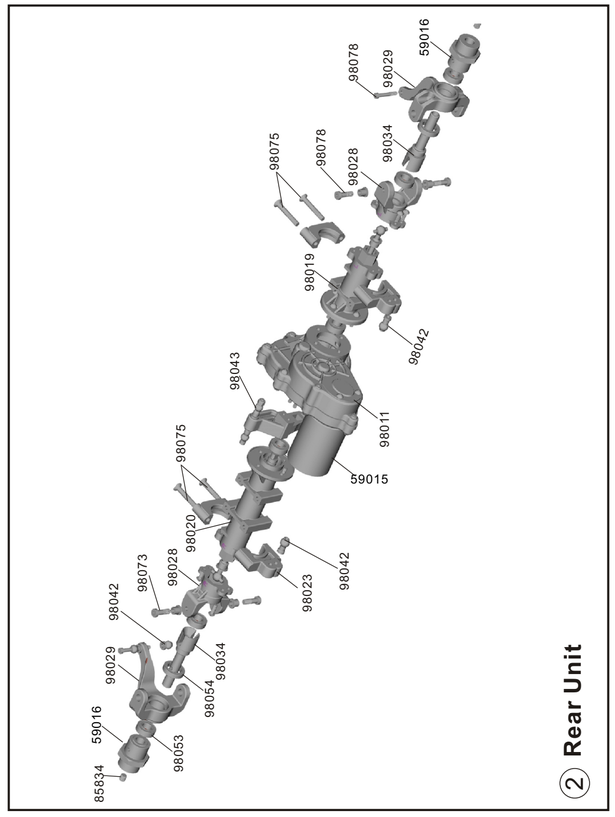

② Rear Unit

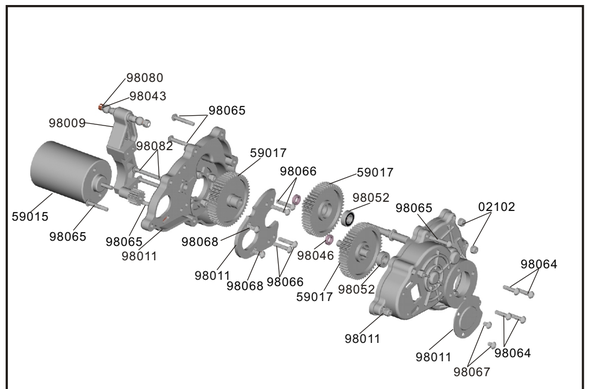

③ Gear Box

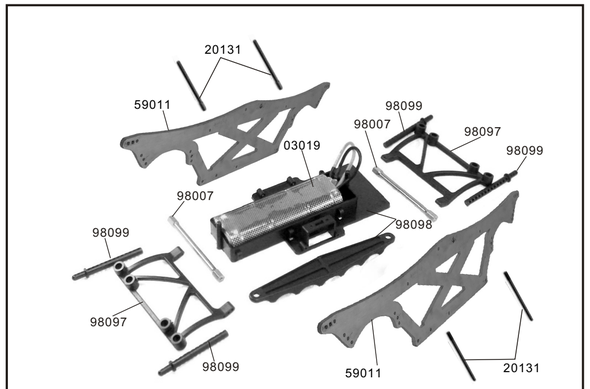

④ Center Unit

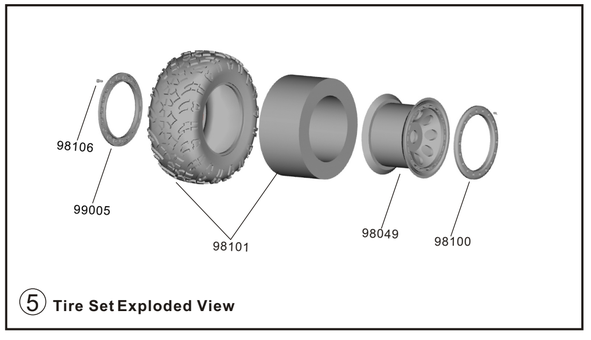

⑤ Tire Set Exploded View

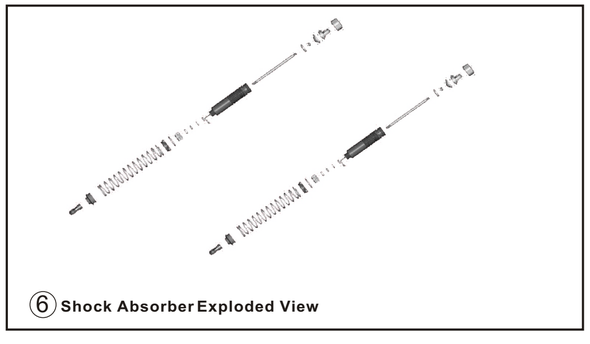

⑥ Shock Absorber Exploded View