Safety and caution 1

Troubleshooting • Product introduction 2

Instruction of common tools and installation the electronic part.....3

Practice and maintenance.....4-5

Assemble exploded view 6-10

Fittings view 11-14

1:18 Full Proportional Remote Control Drive Monster Truck

Caution:This model is not a toy,It is designed for user over 14 years of age.

Please use this instruction and the R/C system instruction at the same time.

The instruction is suitable for a type of modle whose number is A979.

Troubleshooting

Description	Cause	Solution
The car does not operate at all.	Transmitter or receiver is off.	Turn on both transmitter and receiver.
	Batteries are not placed properly in the transmitter.	Place batteries in the transmitter properly.
	The drive battery is not charged enough.	Charge the drive battery.
The car does not follow your operation and control distance not enough long.	Someone else is using the same radio frequency as you are using.	Charge your radio frequency to the one no one else is using,wait until the driver using the same radio frequeny finishes driving,or drive your car at a different place.
	There is not enough power in the transmitter or receiver batteries.	Replace the transmitter batteries with new ones and charge the drive battery.
	Not tighten antenna on the transmitter/not fully extend antenna.	Make sure insert antenna into the transmitter and fully extend antenna.

CAUTION

* Please observe the operation manual or packing explanation to install and use,and some parts should be installed by adults.
* The product contains small part,it may cause swallow or choke.
* Never run an R/C model in the seeper or rain,moisture areas,or it may cause the parts malfunction.
* Please throw the wrapper in time to avoid danger for the children.
* Regularly examine for damage to the charge,wire,plug, bodyshell or other parts.In the event of any damage,it must not be used until the damage has been repaired.
* The charge,battery box and battery must insert with the appointed power source of product symbol same.
* This product must only be used with the original collocation charger.
* The product is contains the functional outshoots are may be dangerous to the children.
* Apart the charger and toy before clean.
* As the front end of the antenna may be dangerous,do not aim it toward anyone's body,face or eyes.
* Batteries are to be inserted with the correct polarity.
* Use the "AA" non-rechargeable or "AA" rechargeable batteries.
* Non-rechargeable batteries are not to be recharged.
* Rechargeable batteries should only be charged under adult supervision.
* Rechargeable batteries must be removed from model before charger.
* Different types of batteries or old and new batteries are not to be mixed.
* Exhausted batteries are to be remove in time.
* The supply terminals are not to be short-circuited.
* Never short circuit the batteries. throw it in a fire or attempt to open their outer casings.
* Please remove the batteries when not in use.
* Please retain these instructions for future reference.

Product Introduction

Item number：A979 1:18 Full Proportional Remote Control Drive Monster Truck
Vehicle size:：length 253*width 200*height 115MM
Wheelbase：165MM
Wheelspan：95MM
Wheel diameter：71MM Wheel width：40MM
Transmitter battery：4*AA battery
Car battery：7.4V4000MAH
Charge time：150hours
Playing time：about 10 minute
Control distance：100meters Frequency：2.4G
Motor：brushless motor 390
Speed：about 50KM/H
Serve：17G
Four wheels independent suspension
With front and rear differential

Safety and Cautions

*Never run the model on public roads or streets,as it could endanger traffic.
*Never run the model in crowded areas,near or toward people or animals,to prevent property damage and/or personal injury.
*Never run the model near rivers,ponds or lakes as to prevent R/C car from dropping into the water.
*Make sure that no one else is using the same frequency as yours in your running area.Using the same frequency at the same time, whether it is driving,flying or sailing,can cause loss of control with R/C model,resulting in serious accidents.
*To avoid a runaway R/C model or loss of control,always follow the procedure below:
1.Fully extend transmitter antenna.
2.Switch on transmitter.
3.Switch on R/C model.
*Follow reverse procedure to shut down.
*Never touch or hinder rotating tire.
*Never run R/C model in the rain or let run over puddles,as water may cause trouble with R/C model.
*Motor and battery get very hot after running.Take care when handle them.
*Retract transmitter antenna when not in use.
*Remove the batteries from madel and transmitter when they are not in use.

Cautions when handling batteries

*Do not dismantle the battery or charger and do not cut any battery cables.This may cause short-circuit and/or damage to the product.
*Change battery with compatible charger following proper procedure that is called out in the instructions.Do not modify charger or charge battery in improper way.
*Do not recharge battery that is still warm from use as it may damage the battery.Allow the battery to cool off prior to recharging.
*Make sure to disconnect charger cables from R/C model and electric outlet when not in use.
*Remove transmitter battery when not using it for a long time as it may leak and damage transmitter when left for a long period.
*Never incinerate used batteries,as they can explode causing serious accidents.

Safety precautions

Do not operate the model on public roads,in crowded places or near infants, it may cause accidents or injury.

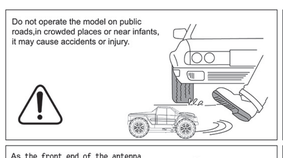

As the product includes small and sharp parts,assemble and store this product only in places out of the reach of children.

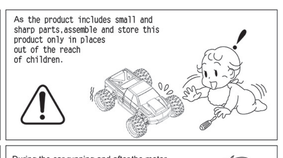

As the front end of the antenna may be dangerous,do not aim it toward faces.

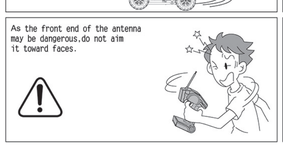

During the car running and after,the motor will be hot. Please do not touch it until it has had time to cool down.

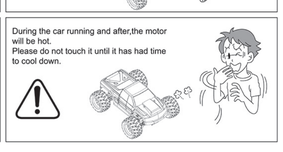

Assemble the electron parts

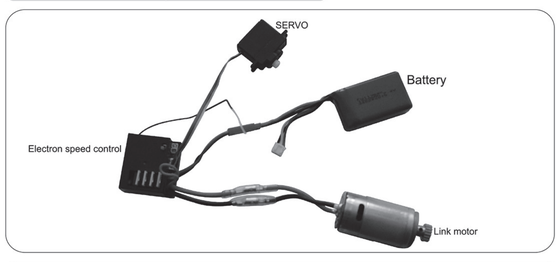

PRACTICE AND MAINTENANCE

Operating program

1>Turn on the switch ❶ of transmitter and make sure the power indicator is ❷ steady light,then turn on the car.

2>Put the car on the frame or stand.If wheel is running self-motion, adjust the trim ❺ of transmitter until the wheel is still.

3>Slip the trigger ❸ of transmitter slowly,you can observe the car whether it can go ahead or go back.

4>Turn steering adjusting wheel ❹ of transmitter to left or right,and make sure the steering of front wheels follow the instruction.

5>Put the car on the ground and stand behind the back of the car. Squeeze the throttle trigger ❸ of transmitter gently.If the car does not move in a straight line,you can adjust the trim ❻ of transmitter until the car moves in a straight line.

6>OK,ready to run.

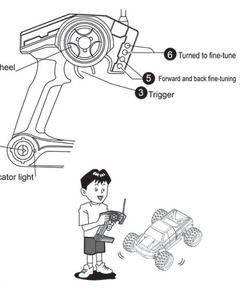

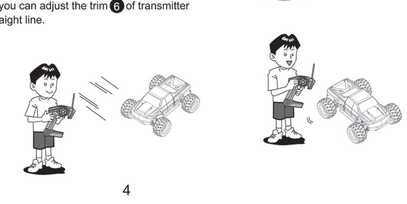

Sale parts view

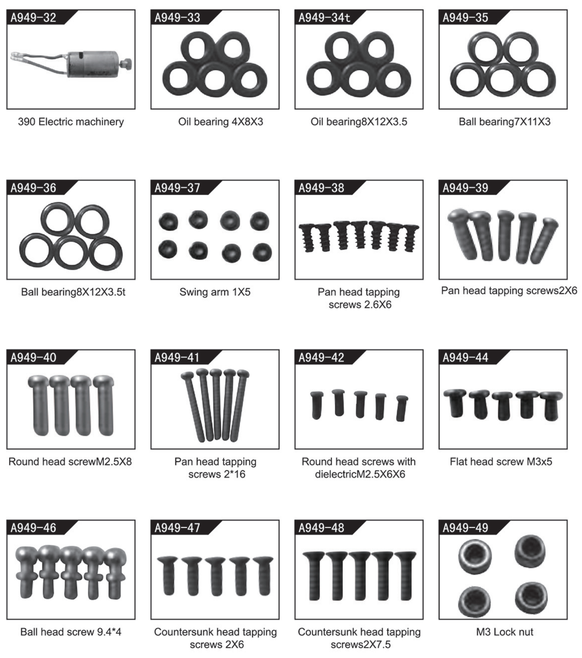

Sale parts view

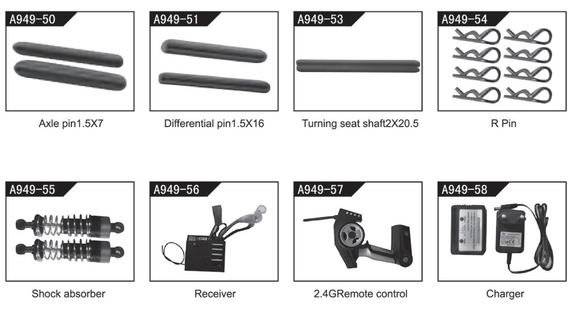

Proportional R/C Using Instruction

① Turn left the steering wheel,the car will turn left.Turing left angle can be adjusted by the degree of wheel twisting.

② Turn right the steering wheel,the car will turn right.Turing right angle can be adjusted by the degree of wheel twisting.

③ Pull the throttle trigger backward,the car will forward.Adjusting the angle of throttle trigger can adjust forward speed of the car.During the car forward,quickly push the trigger forward to stop it.

④ Loosen the trigger to make it return the neutral position when brake. Push the throttle trigger forward,the car will backward.Adjusting forward angle of throttle trigger adjust backward speed of the car.

Introduce the common tools and assemble the electron parts

Tools needed for assembly

Charge caution

CHARGING BATTERY

1)Please firstly check and confirm input voltage of the charge is consistent with local voltage,output voltage of the charge is consistent with battery voltage.
2)Battery must be used up before you charge, Charging time is not more than 5 hours.
3)Be careful to make sure there is adult to control when charging.

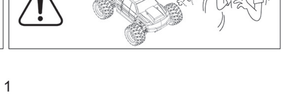

Assembly Exploded Diagram

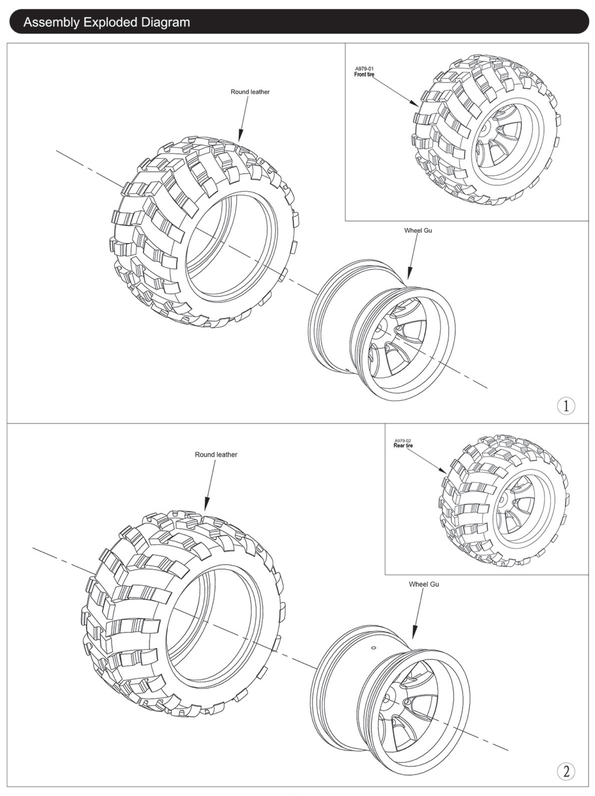

Sale parts view

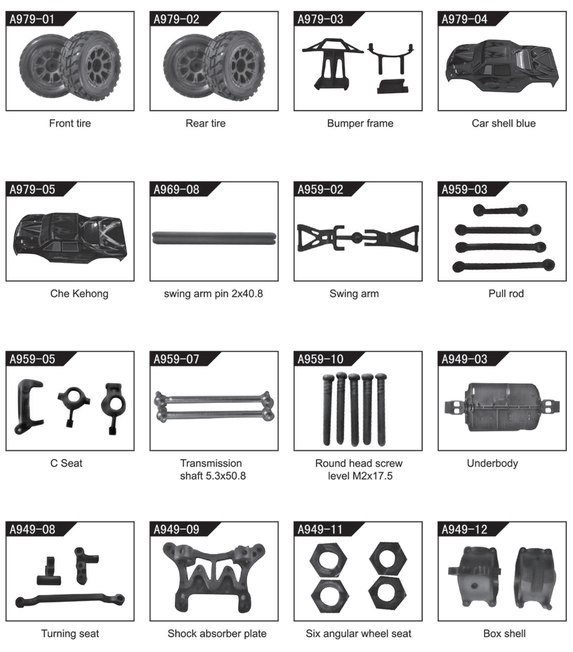

Sale parts view

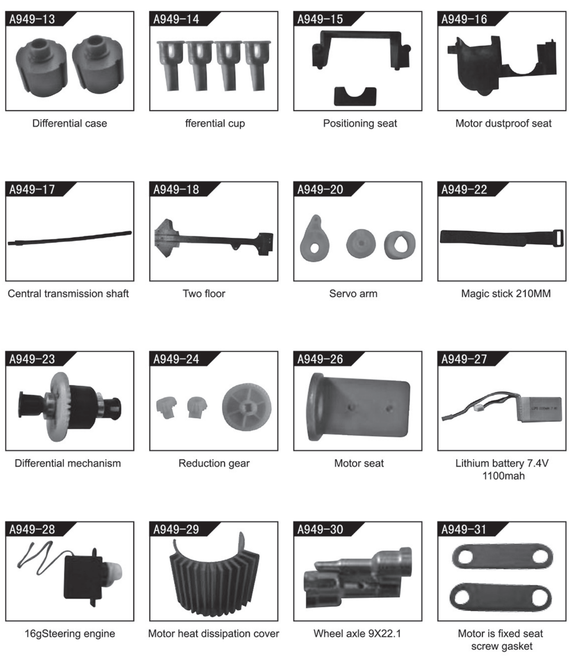

Practice

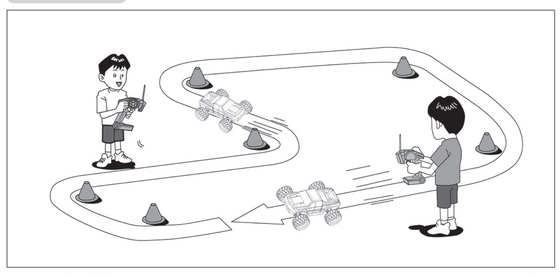

Let's practice!Make R/C car circuit at a wide and safe location using corner pylons(separately available),empty cans or such.Running fast at straight section and slow down at curved section is a basic speed control technique useful when driving R/C car.

Maintain

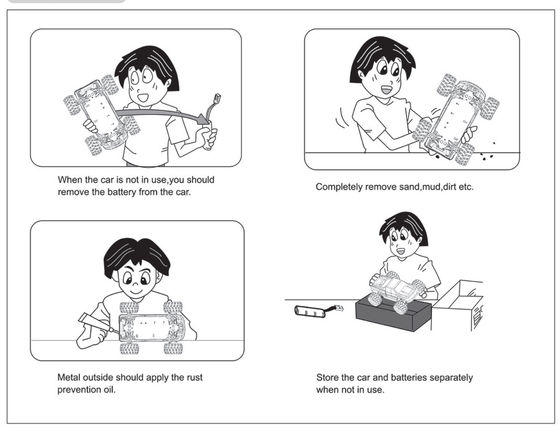

When the car is not in use,you should remove the battery from the car.

Completely remove sand,mud,dirt etc.

Metal outside should apply the rust prevention oil.

Store the car and batteries separately when not in use.

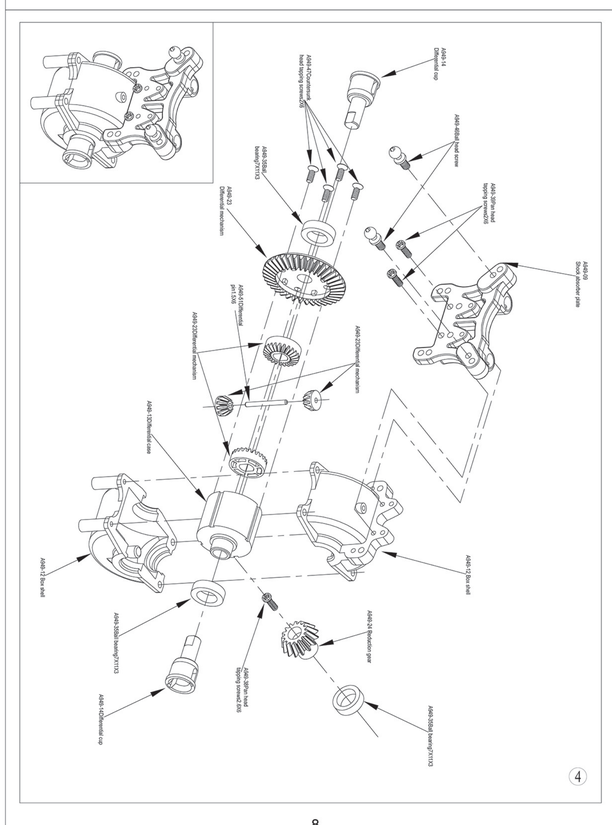

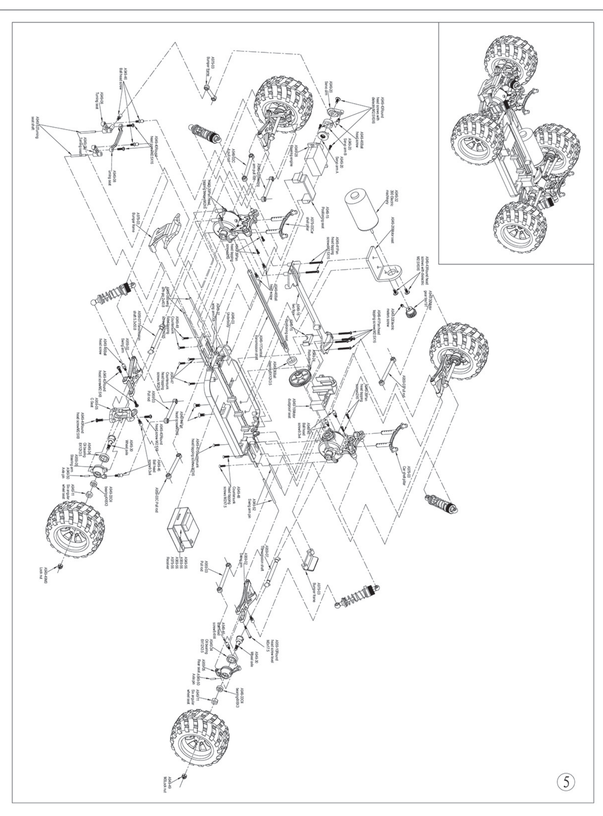

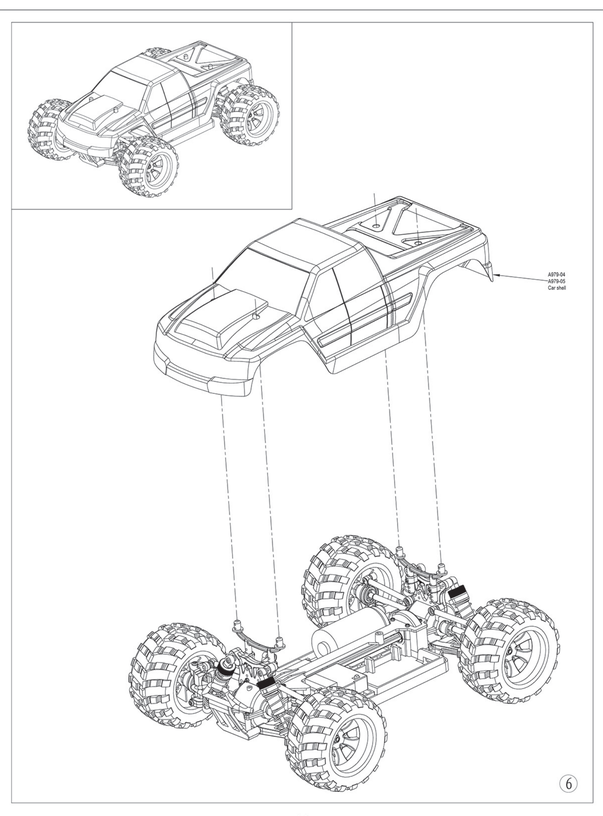

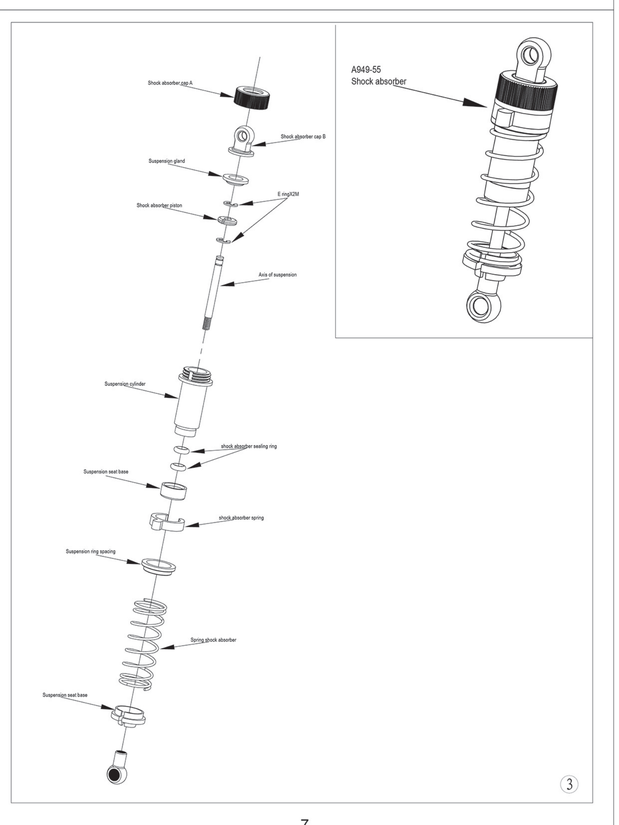

15/12/12
SIZE:210mmx285mm
NO.L959英文说明书
校口