成品示意图 360° VIEW PICTURE

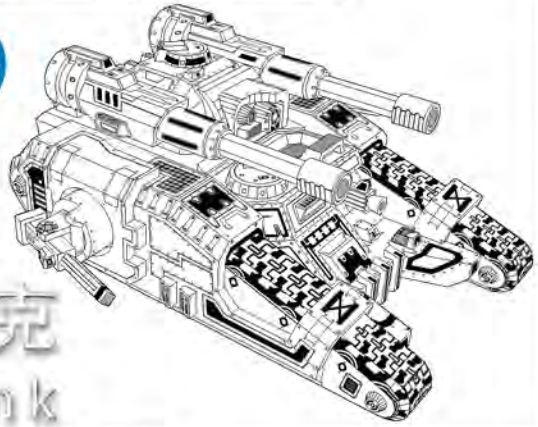

坦克
Tank

组装基本步骤示意图 BASIC ASSEMBLING STEPS

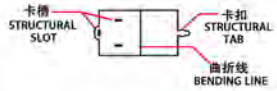

固定方式一：
将卡扣穿过对应固定孔，
按对应角度曲折（图一）
Fitting method 1:
put the tab in the slot,
bend properly(p1)

固定方式二：
将卡扣穿过对应固定孔，
用钳子类工具垂直扭曲固
定卡扣（图二）
Fitting method 2:
put the tab in the slot,
bend the tab vertically
with plier(p2).

折弯面
Bending surface

纹理面
Textured surface

非纹理面
Non - textured surface

优先拼装
First to assembly

磁铁分两种，大磁铁和小磁铁
Two kinds of magnets, big magnets and small magnets

注意拼装前带手指套
Take finger cots before assembly

注意磁极
Attention magnetic pole

备份零件
Backup parts

金属部件A METAL SHEET-A

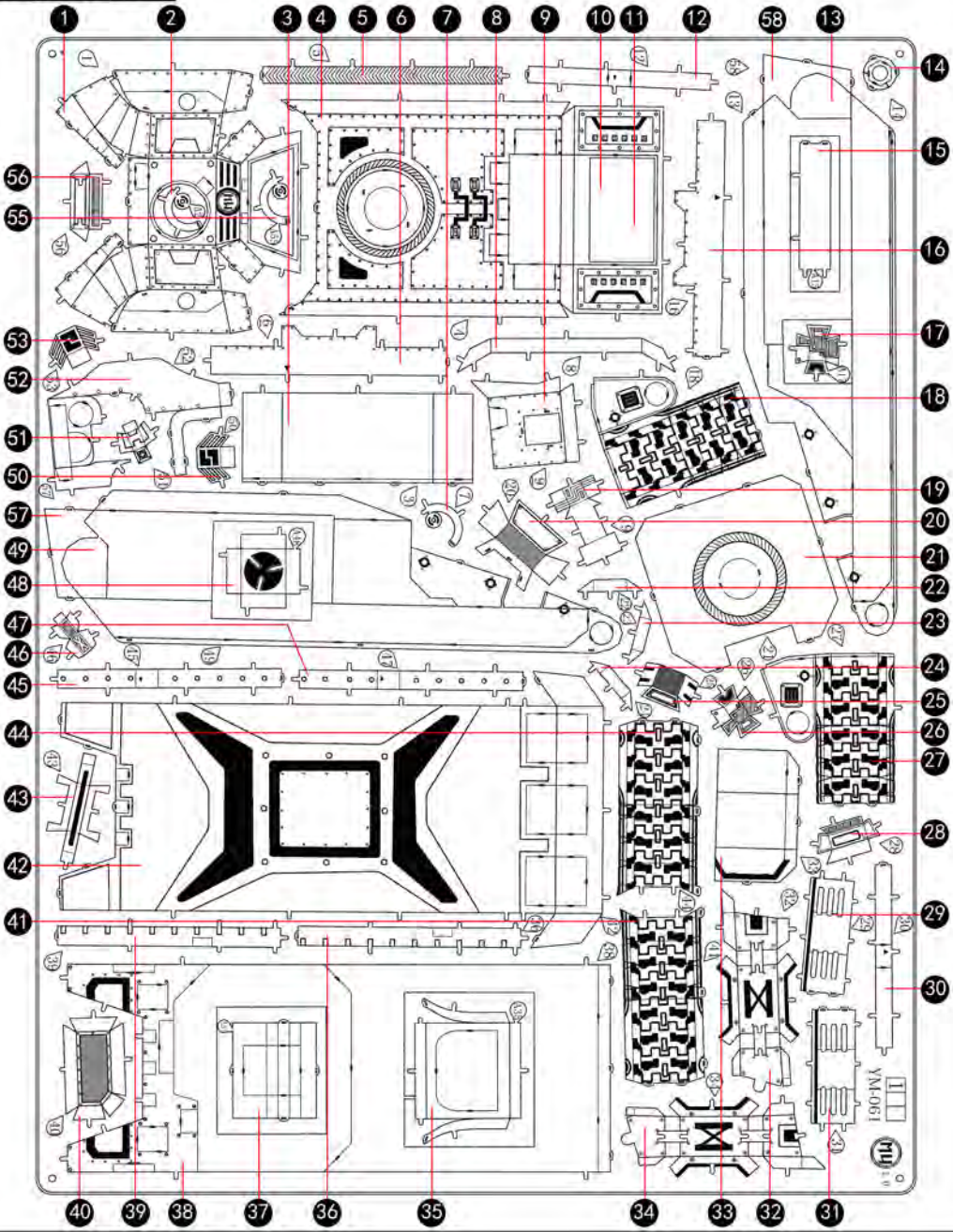

金属部件B METAL SHEET-B

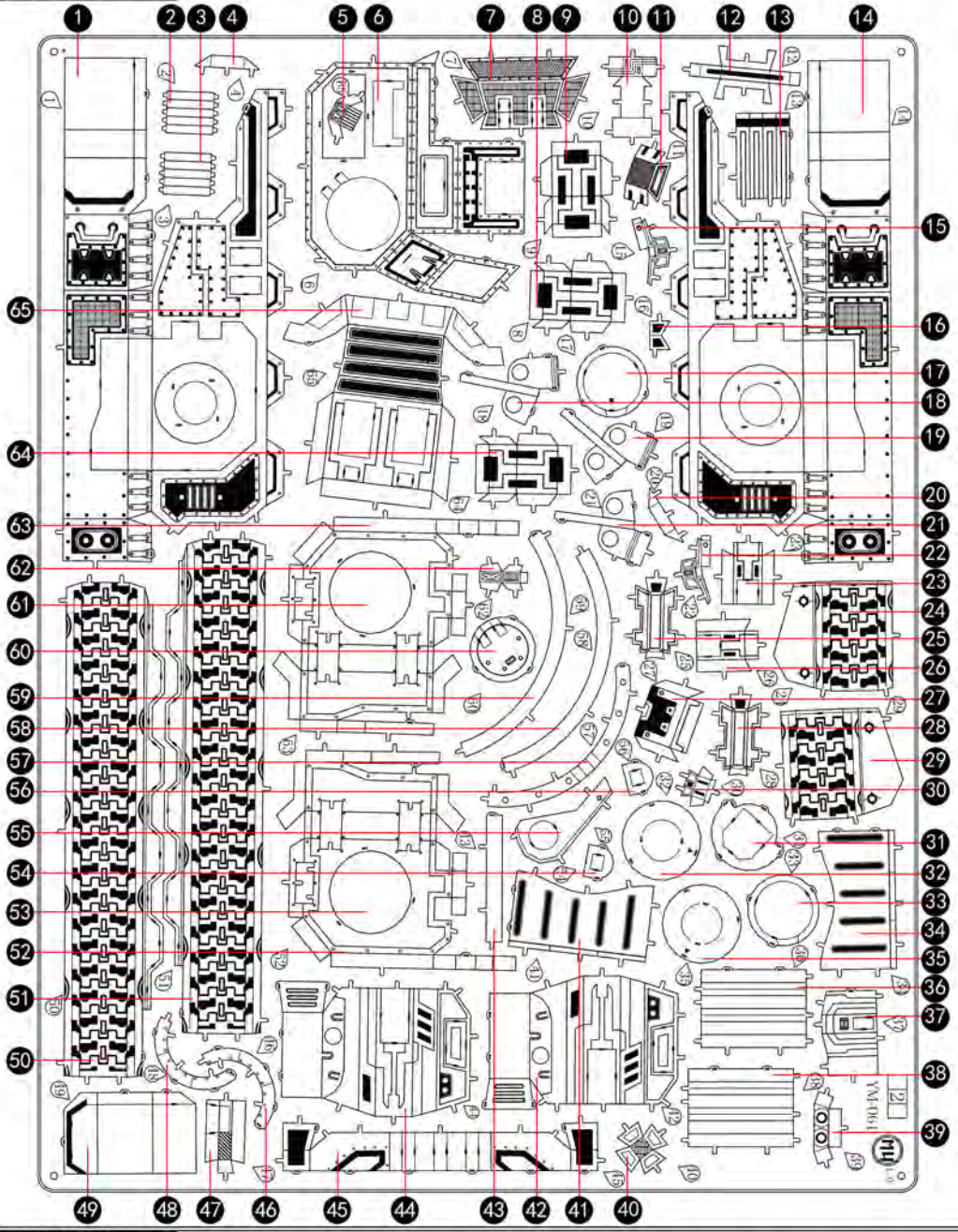

金属部件C METAL SHEET-C

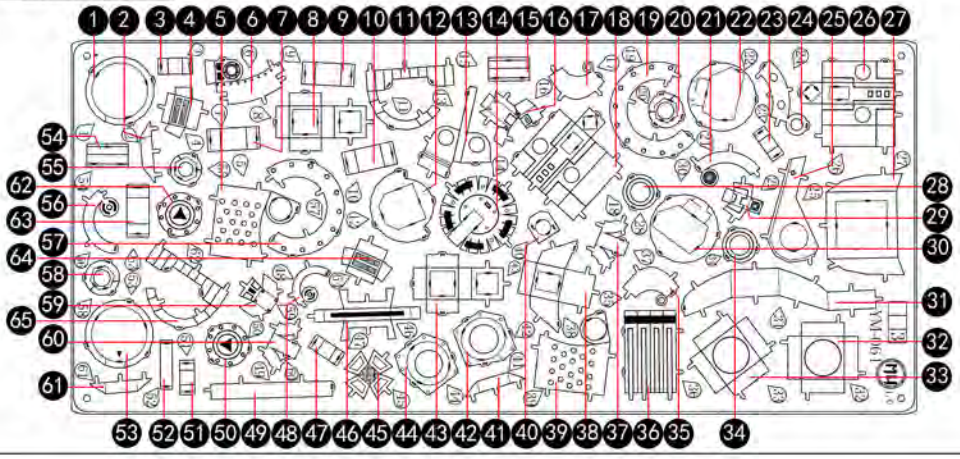

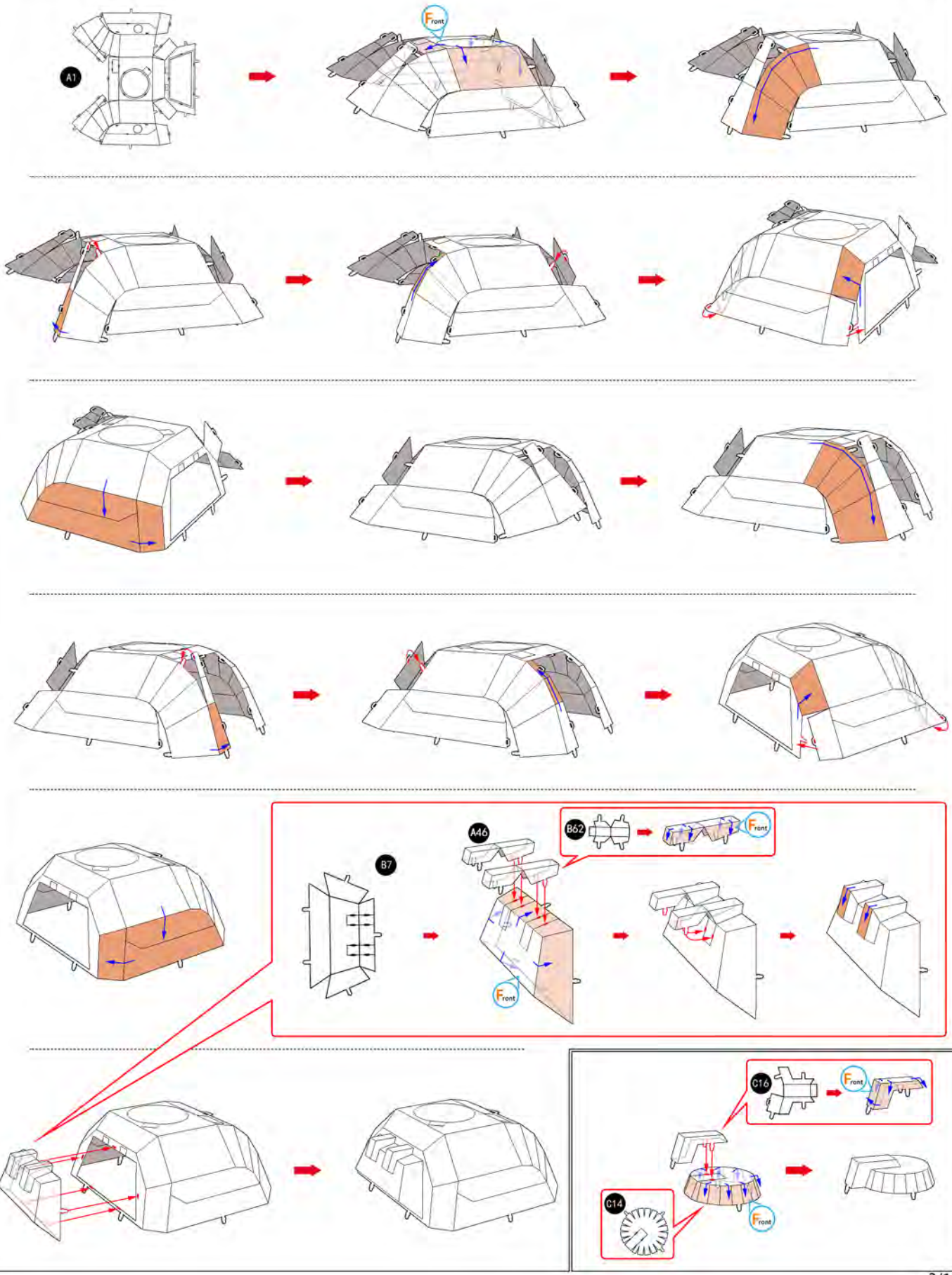
A1
Front
B7
A46
B62
Front
Front
C16
Front
C14
Front

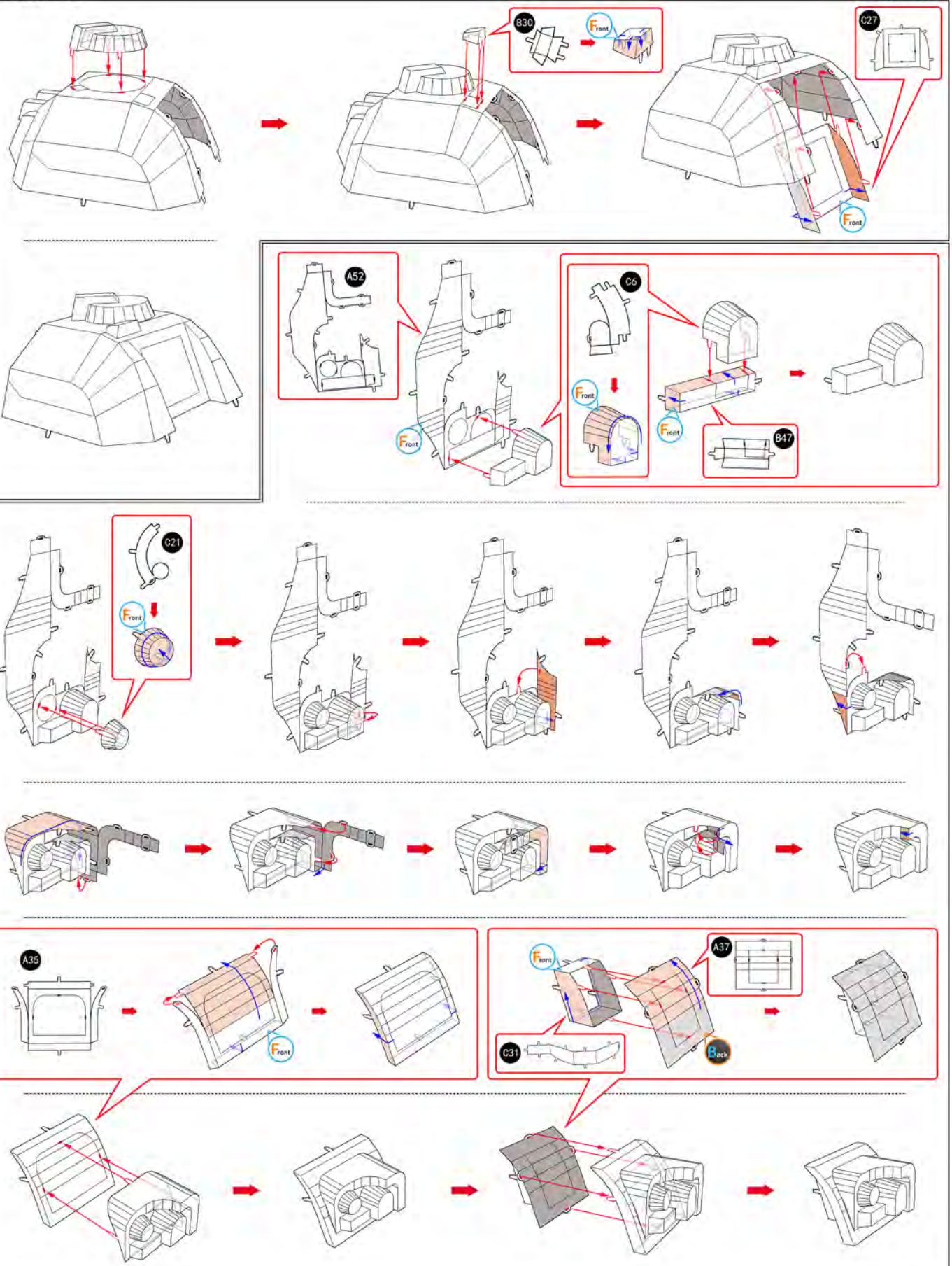
B30
Front
C27
Front
A52
Front
C6
Front
Front
B47
C21
Front
A35
Front
Front
A37
C31
Back

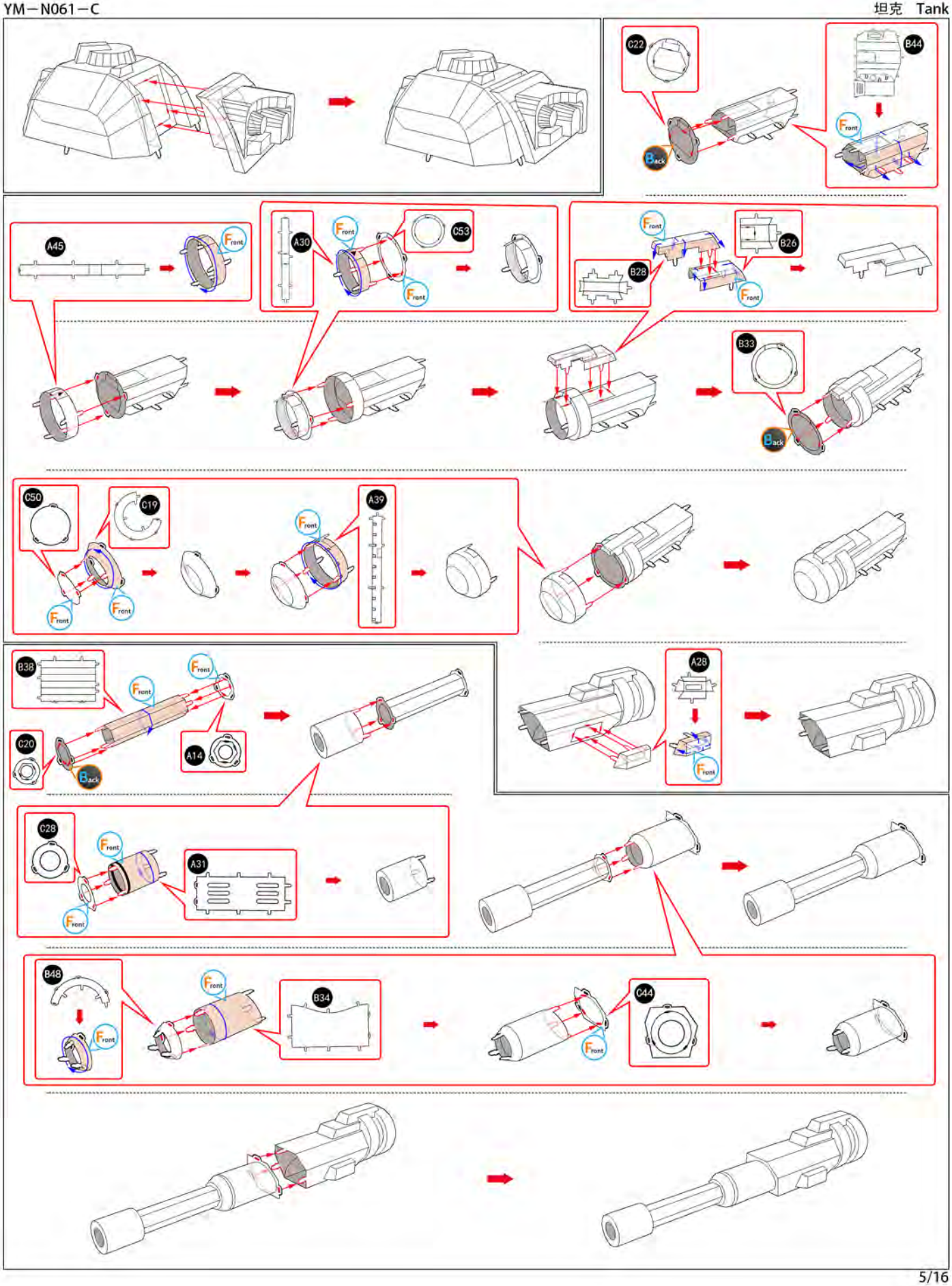
C22
B44
Back
Front
A45
A30
C53
B28
B26
B33
C50
C19
A39
B38
C20
A14
A28
C28
A31
B48
B34
C44

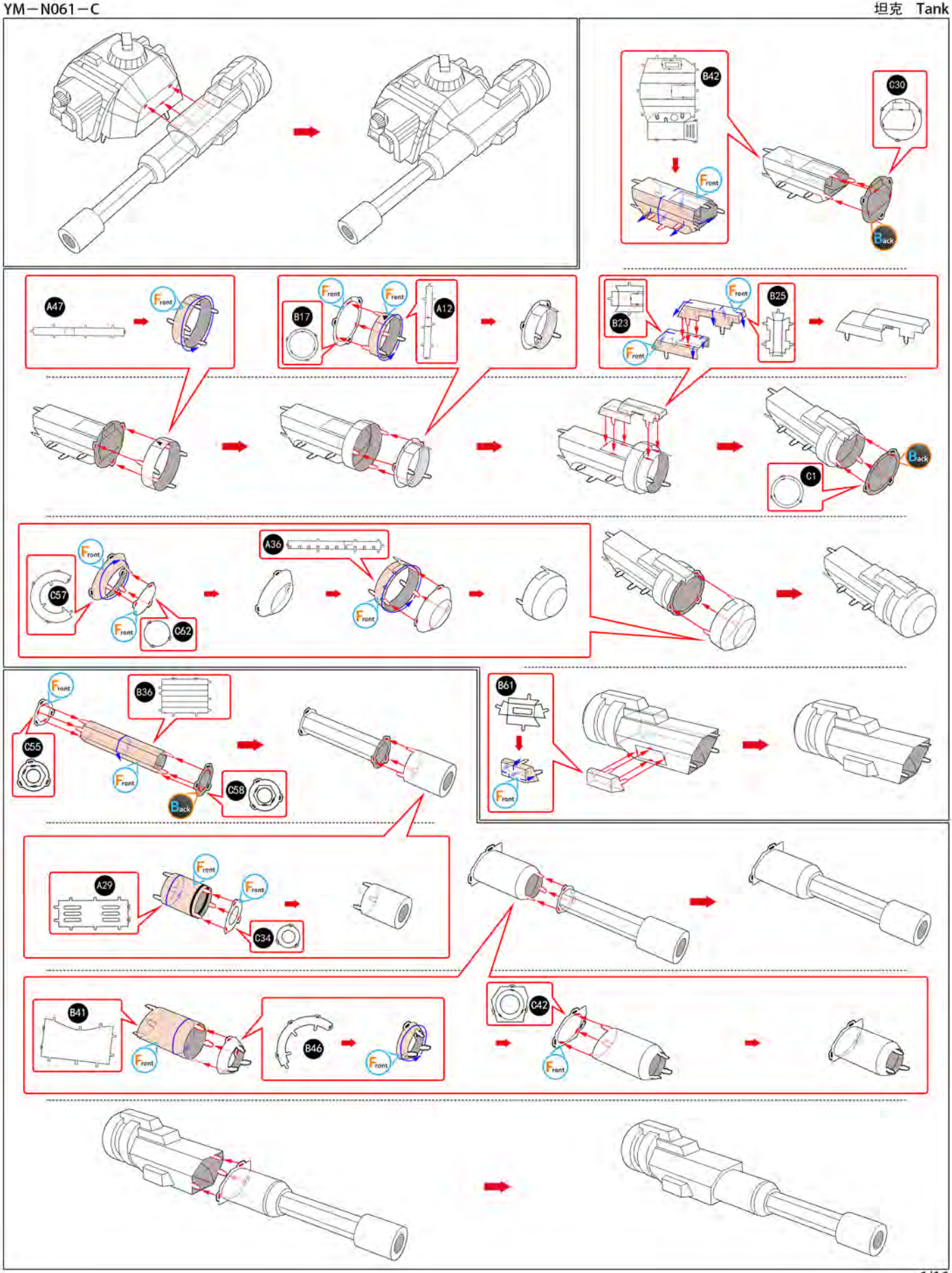
B42
C30
Front
Back
A47
B17
A12
B23
B25
C1
C57
C62
A36
B36
C55
C58
B61
A29
C34
B41
B46
C42

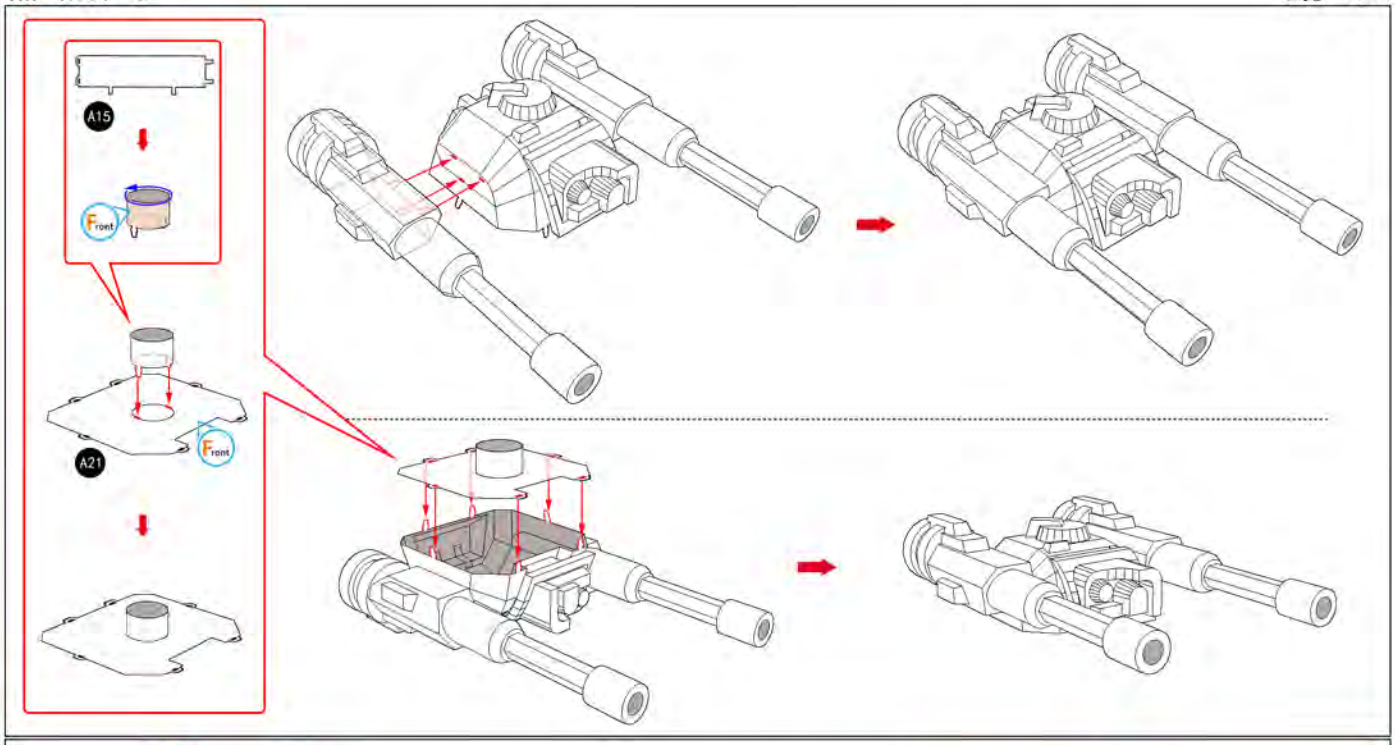
A15
Front
A21
Front

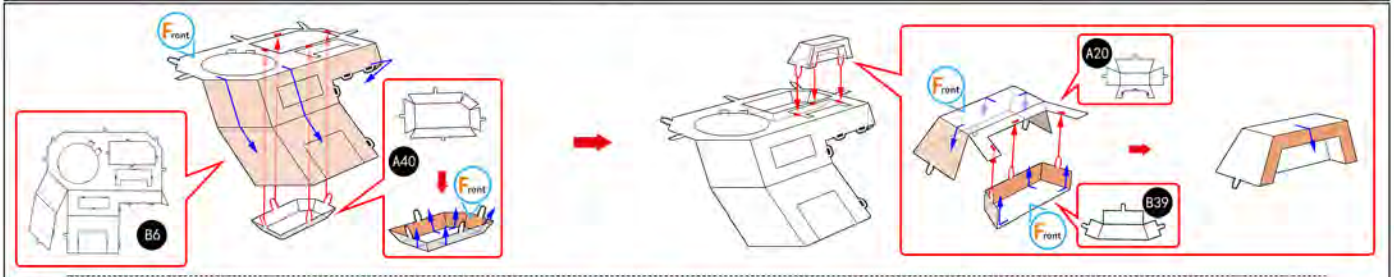
Front
B6
A40
Front
A20
Front
B39
Front

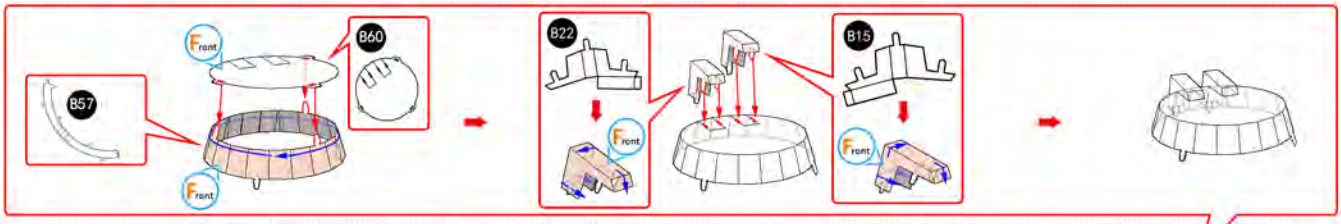
B57
Front
B60
Front
B22
Front
B15
Front

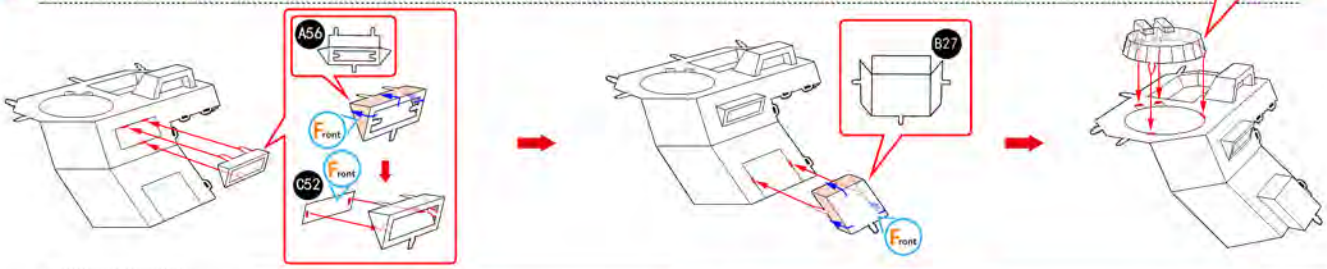
A56
Front
Front
C52
B27
Front

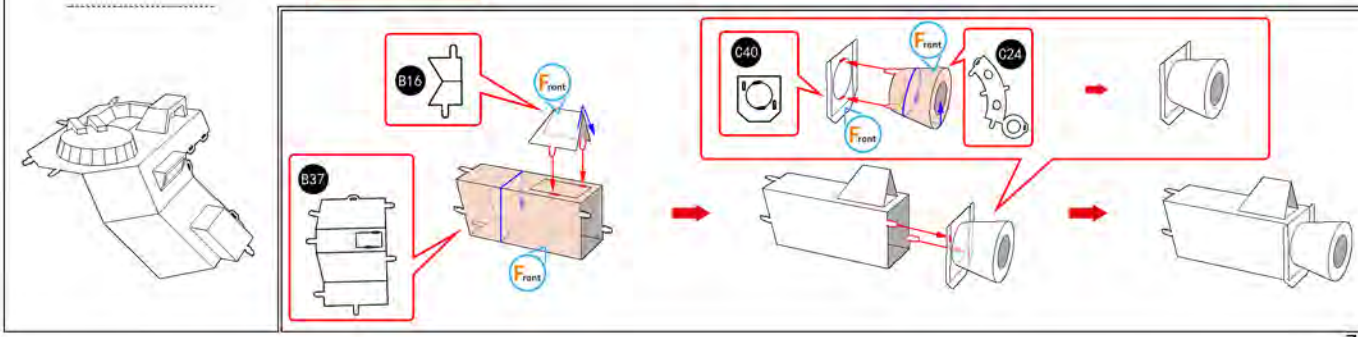
B16
Front
B37
Front
C40
Front
Front
C24

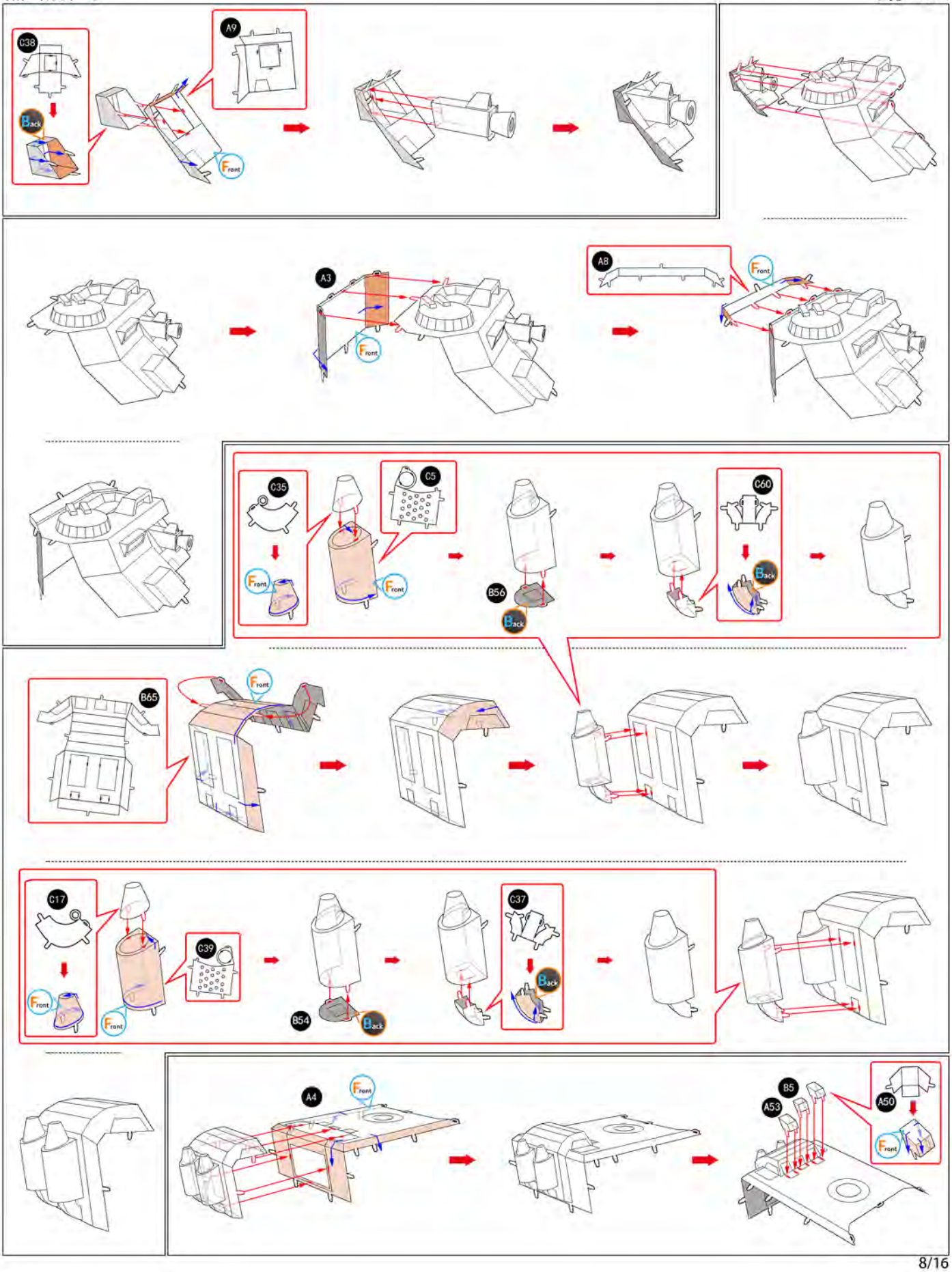
C38
Back
A9
Front
A3
Front
A8
Front
C35
Front
C5
Front
B56
Back
C60
Back
B65
Front
C17
Front
Front
C39
B54
Back
C37
Back
A4
Front
B5
A53
A50
Front

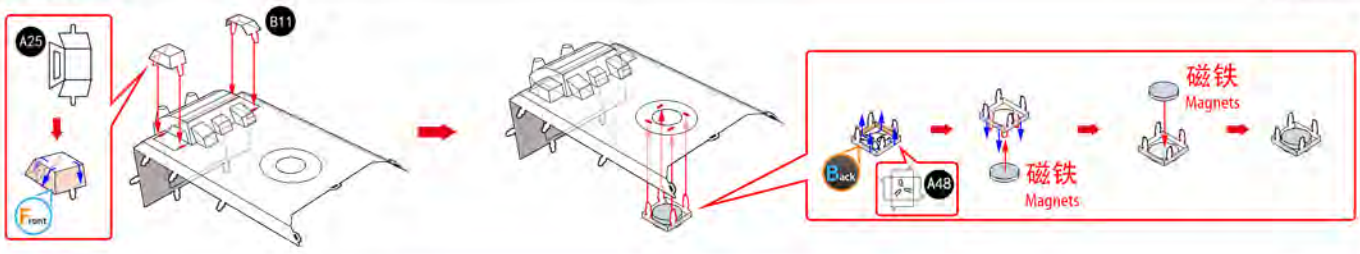
A25
Front
B11
磁铁
Magnets
Black
A48
磁铁
Magnets

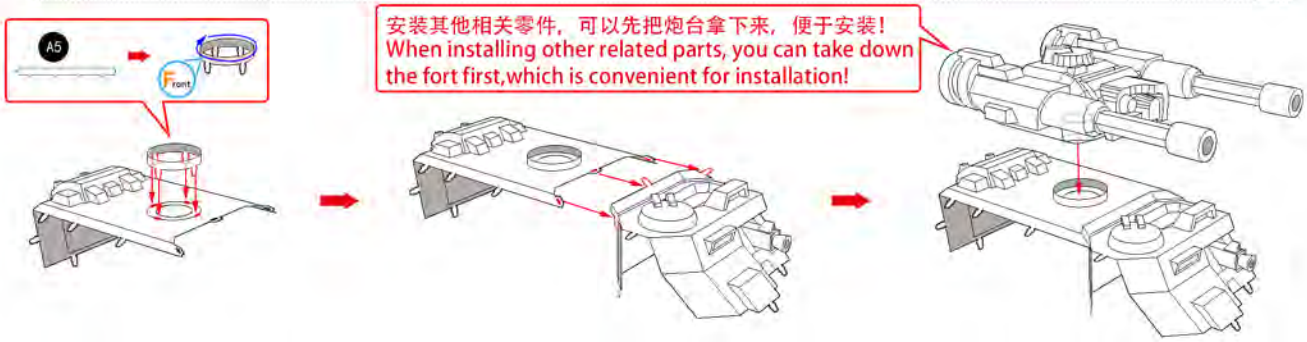
A5
Front
安装其他相关零件，可以先把炮台拿下来，便于安装！
When installing other related parts, you can take down the fort first,which is convenient for installation!

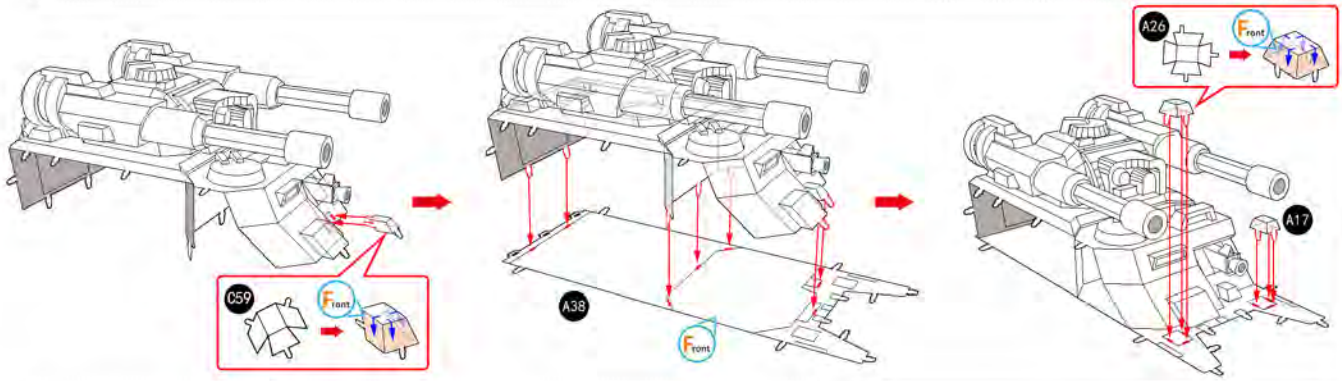
C59
Front
A38
Front
A26
Front
A17

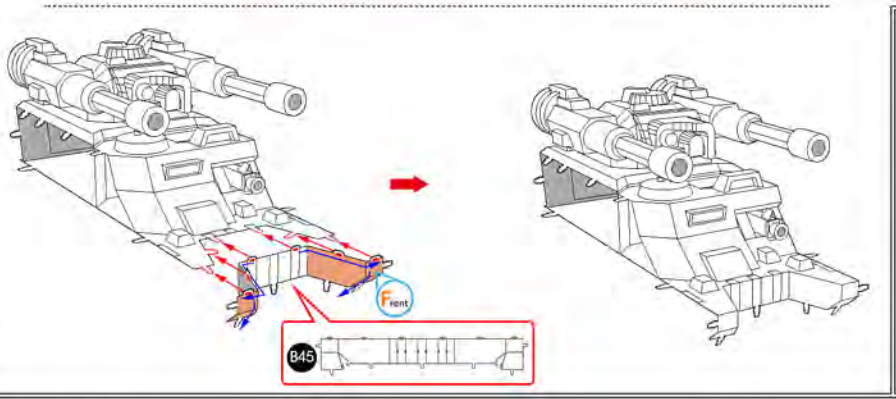
Front
B45

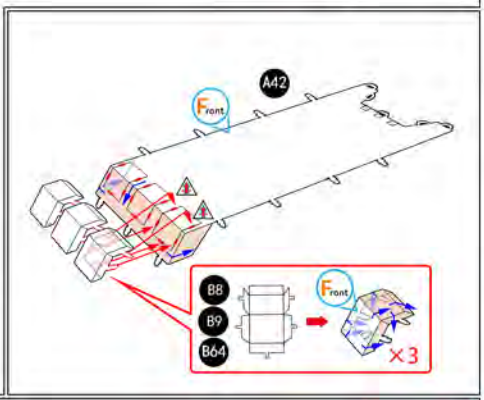
A42
Front
B8
B9
B64
Front
×3

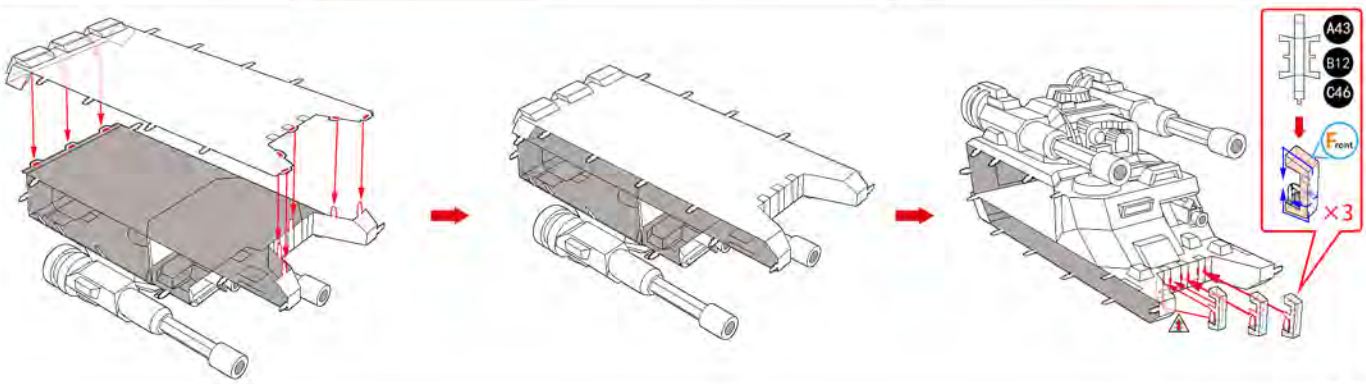
A43
B12
C46
Front
×3

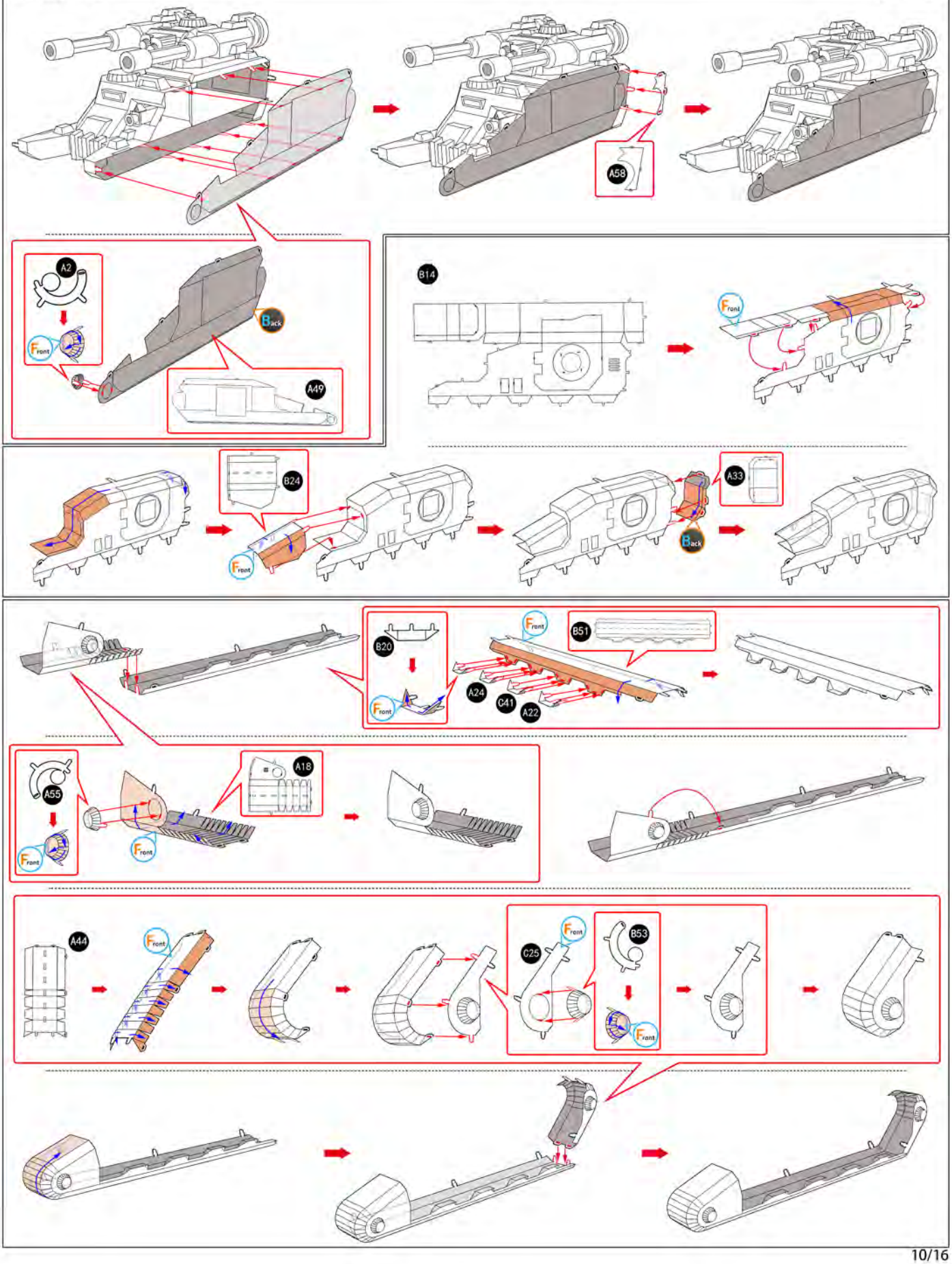
A58
A2
Front
Back
A49
B14
Front
B24
Front
A33
Back
B20
Front
Front
B51
A24
C41
A22
A55
Front
A18
Front
A44
Front
C25
Front
B53
Front

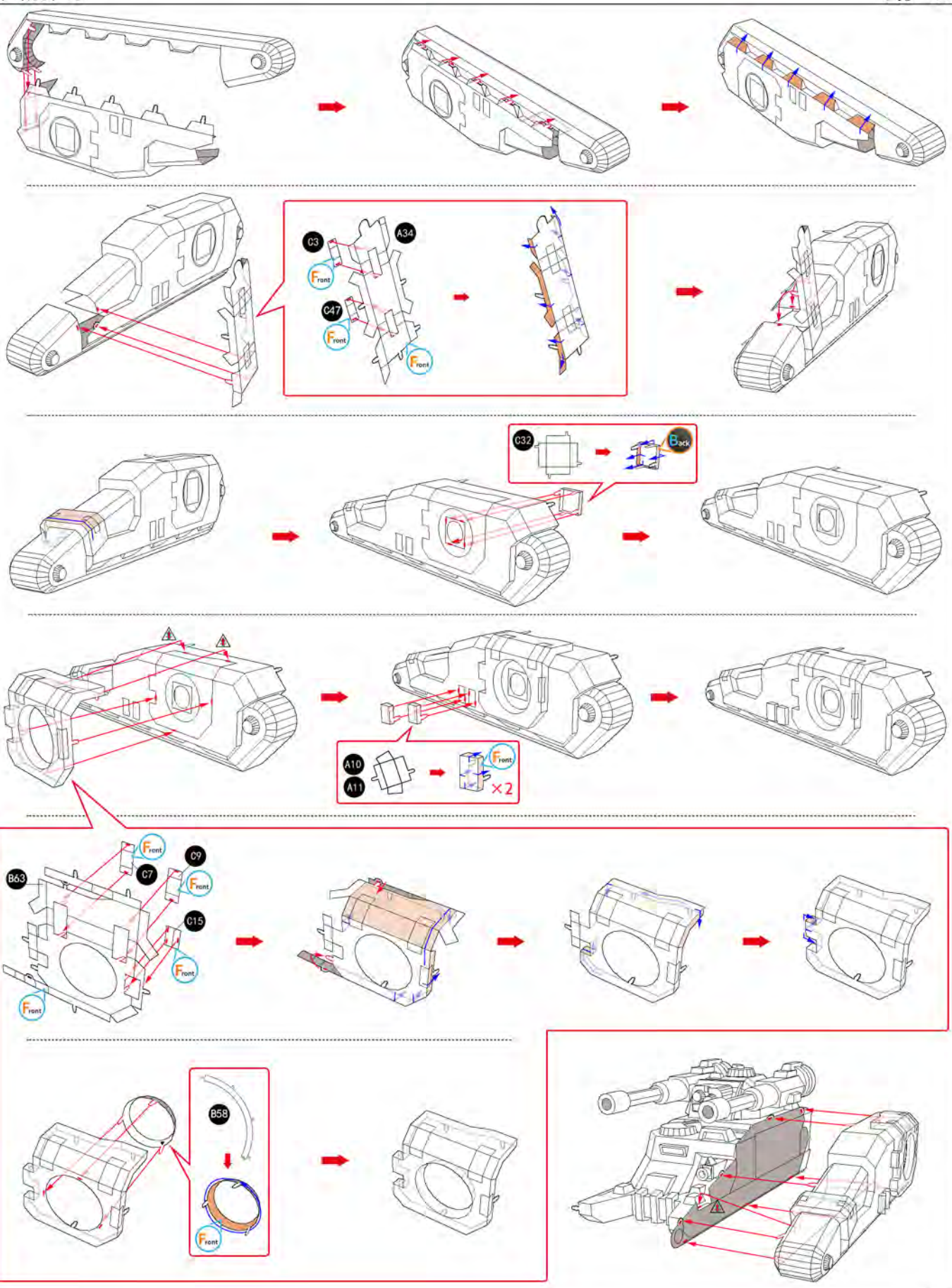
C3
A34
Front
C47
Front
Front
C32
Back
A10
A11
Front
×2
B63
C7
Front
C9
Front
C15
Front
Front
B58
Front

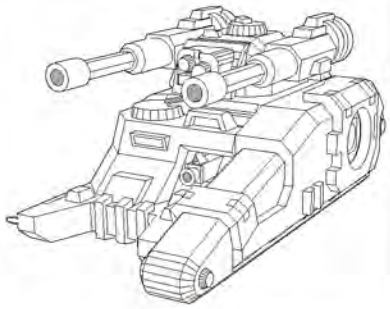

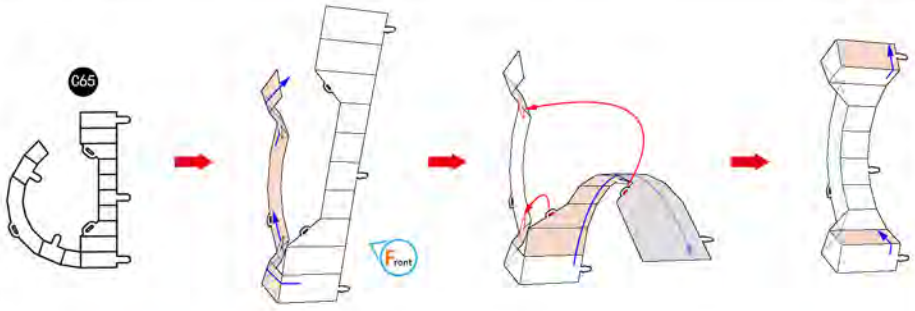
C65
Front

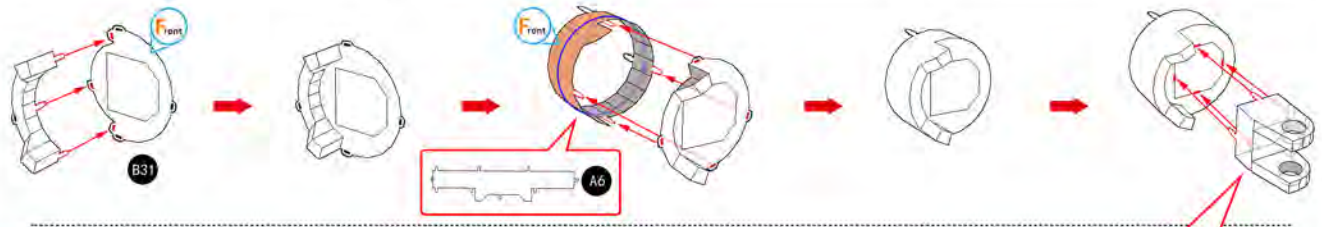
Front
B31
Front
A6

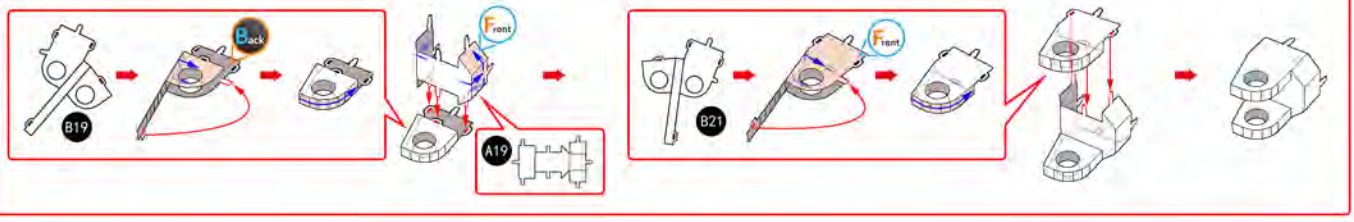
Black
B19
Front
A19
Front
B21

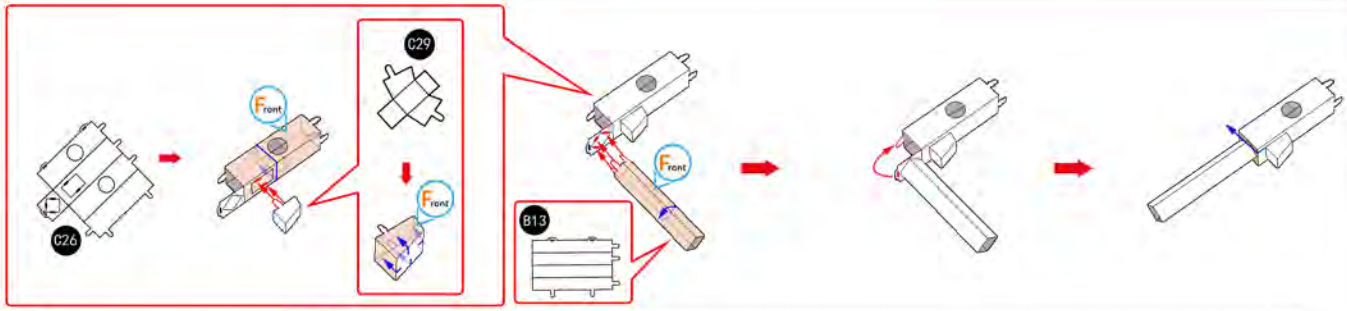
C29
Front
C26
Front
Front
B13

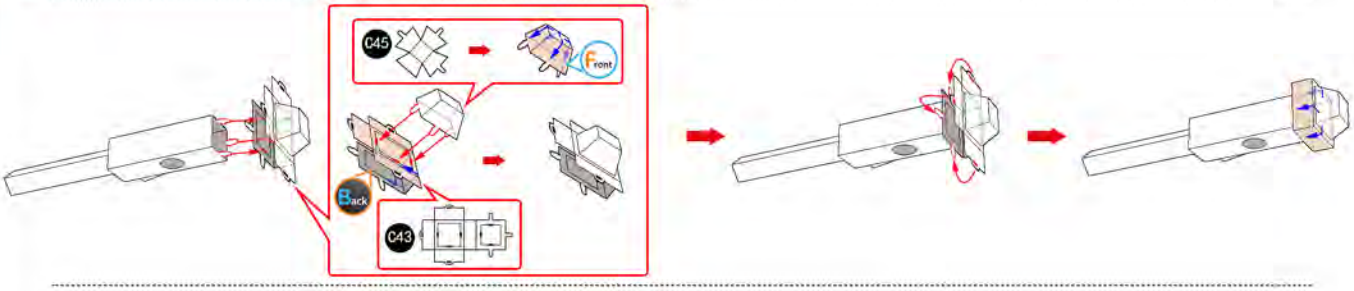
C45
Front
Black
C43

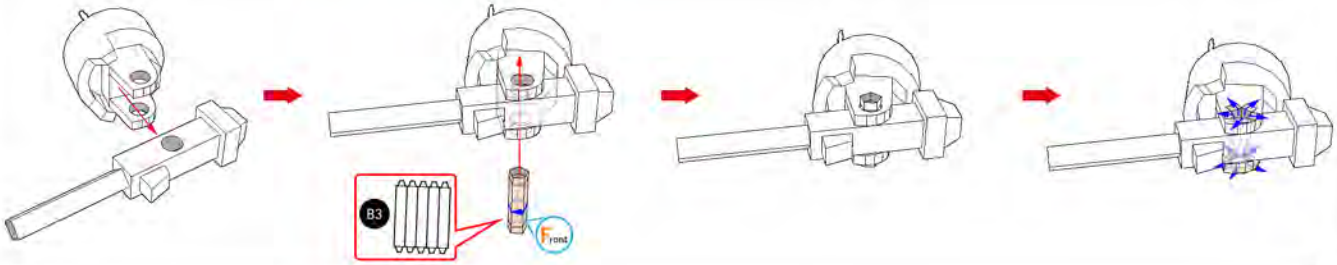
B3
Front

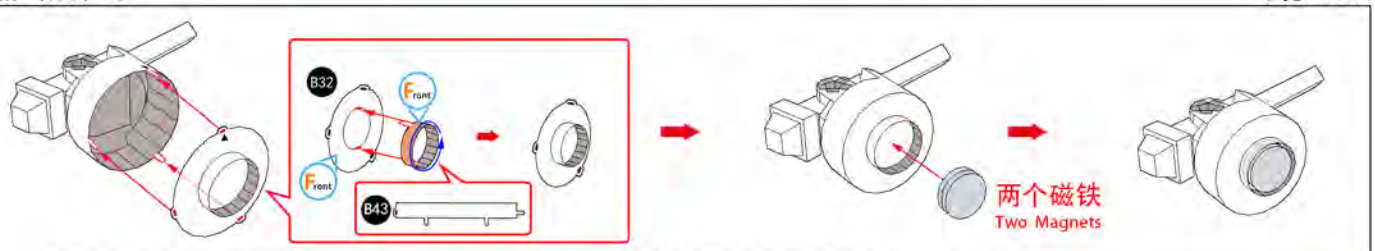
B32
Front
Front
B43
两个磁铁
Two Magnets

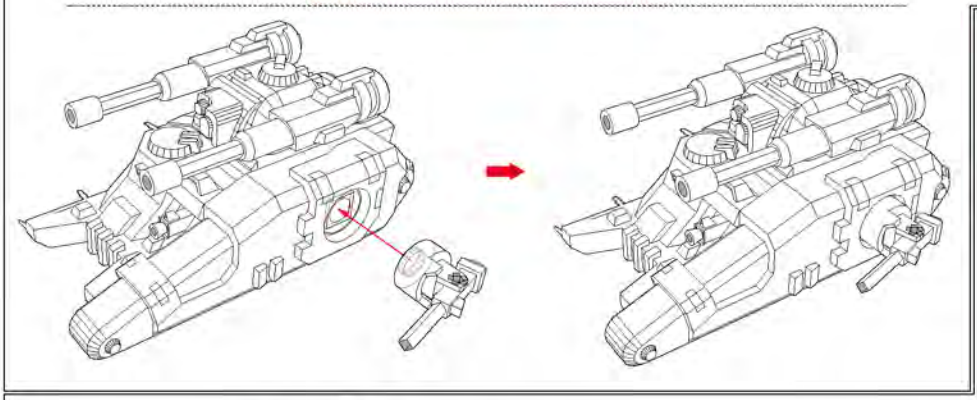

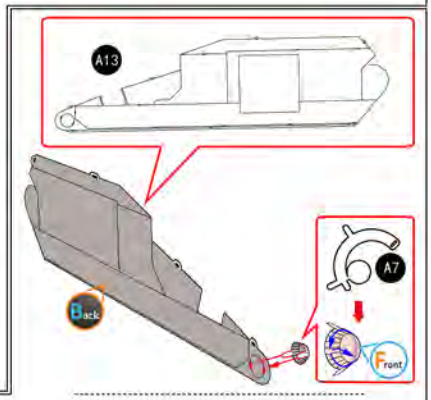
A13
A7
Back
Front

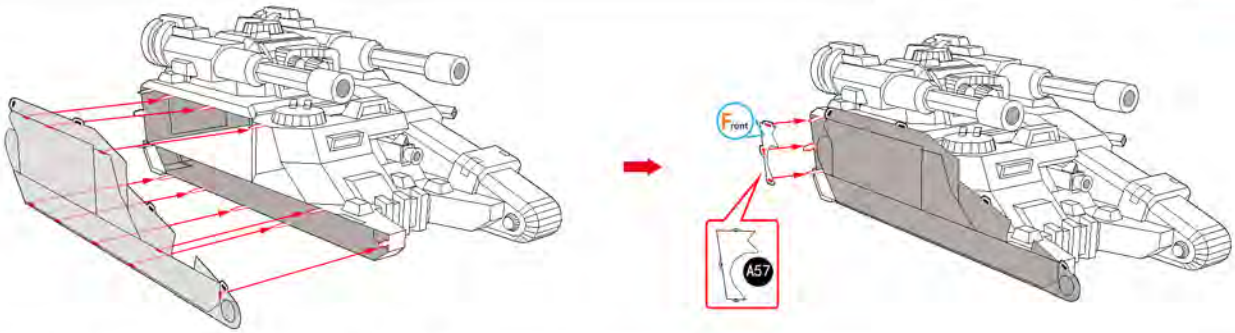
Front
A57

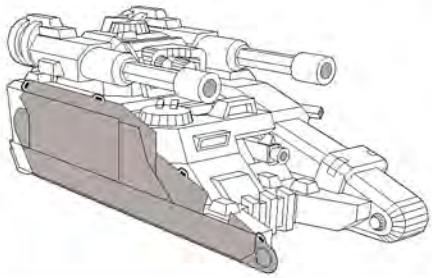

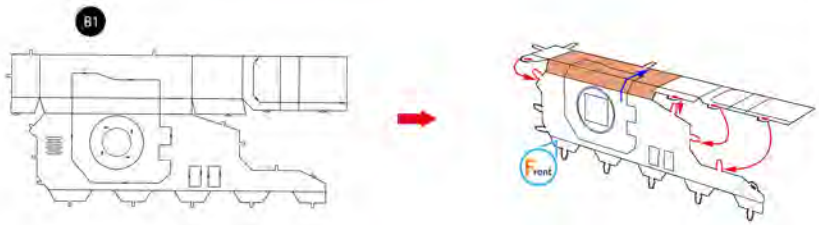
B1
Front

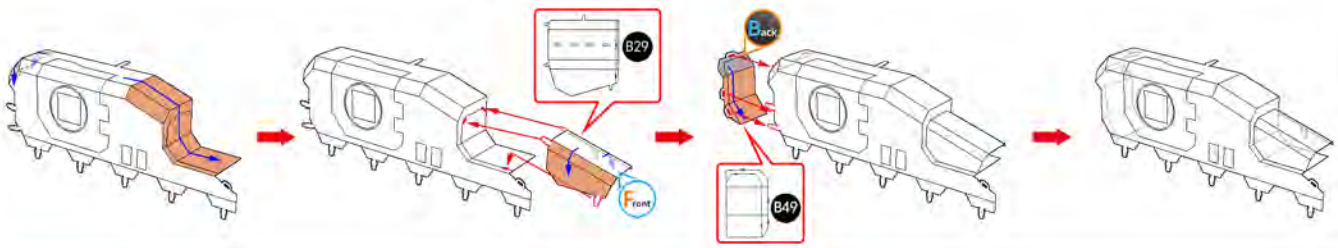
B29
Front
Back
B49

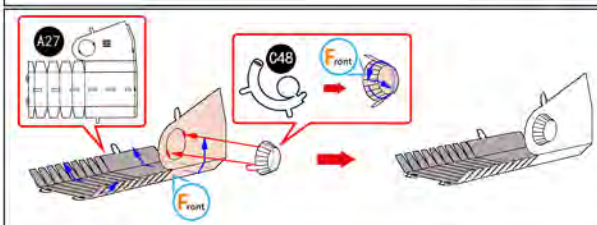
A27
C48
Front
Front

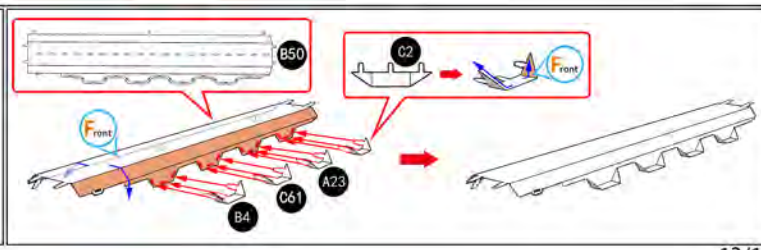
B50
C2
Front
Front
A23
C61
B4

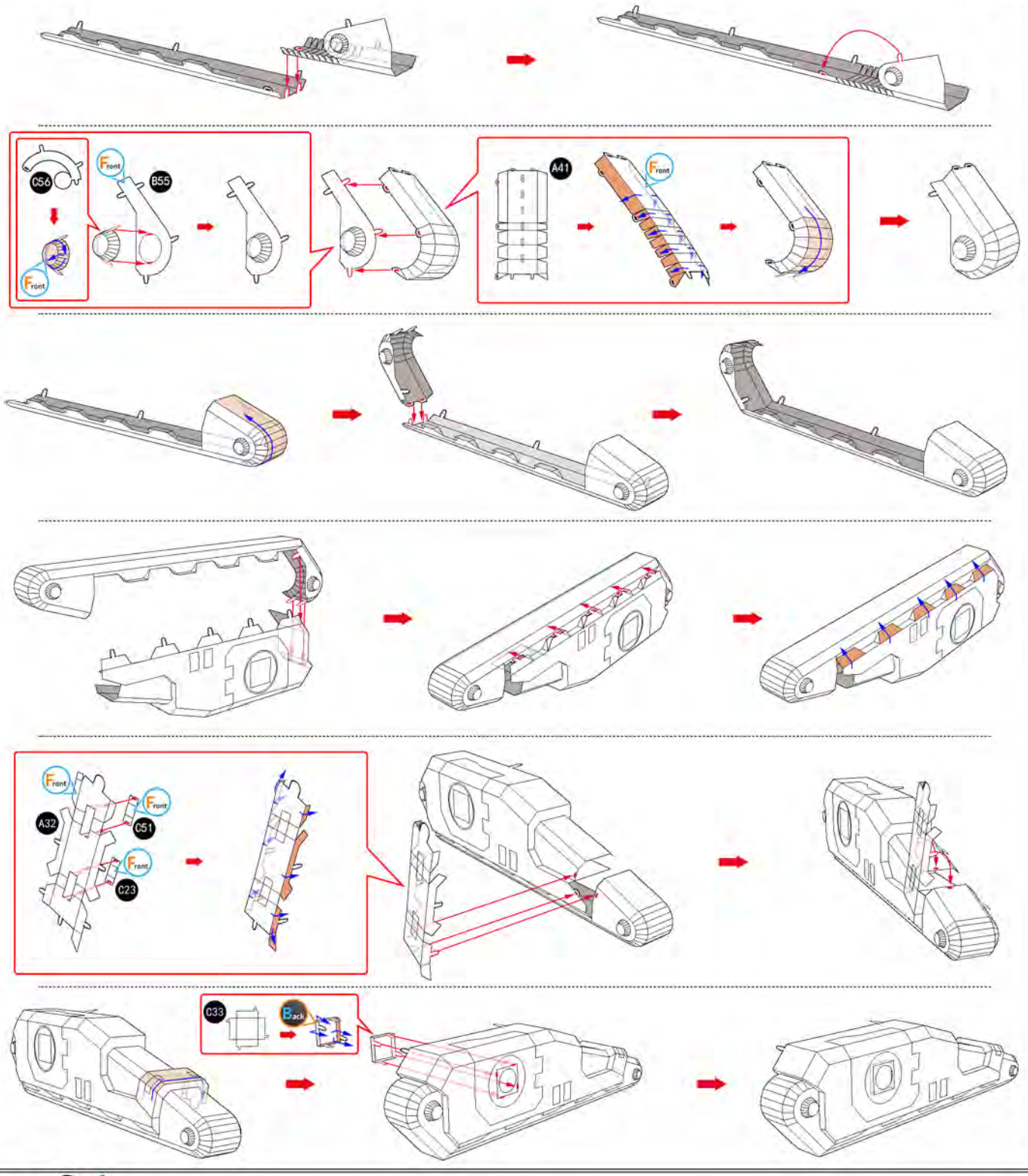
C56
Front
B55
Front
A41
Front
A32
Front
C51
Front
C23
C33
Back
C10
C63
Front
Front
B52
Front
C54
Front

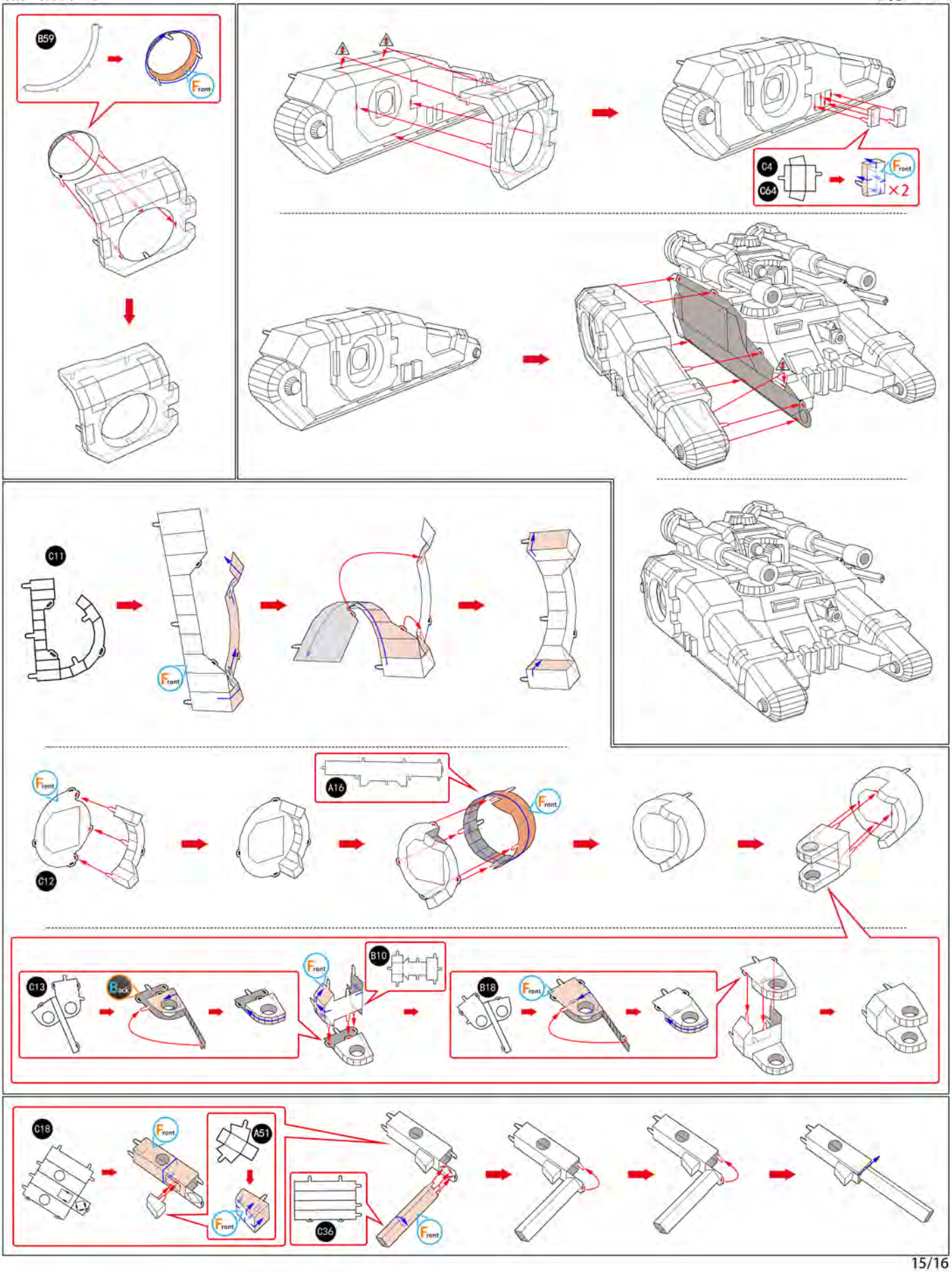
B59
Front
C4
C64
×2
C11
A16
C12
C13
Back
B10
B18
C18
A51
C36

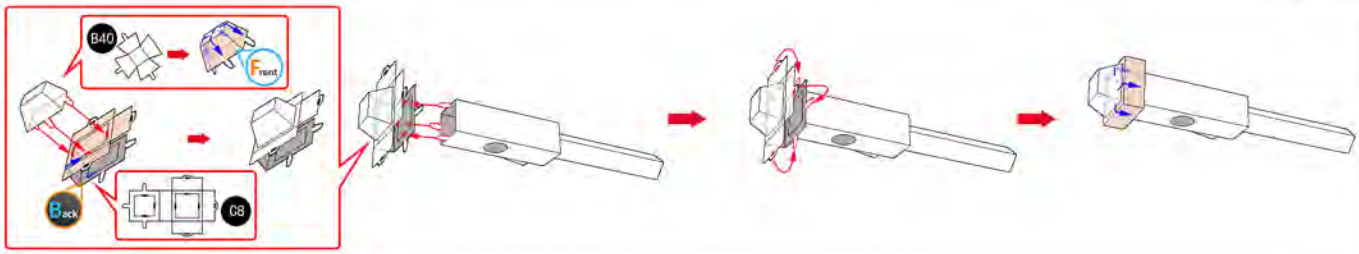

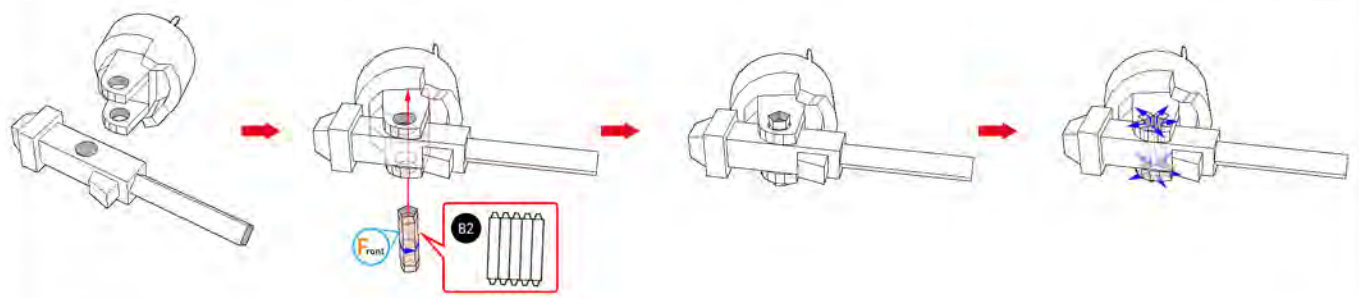

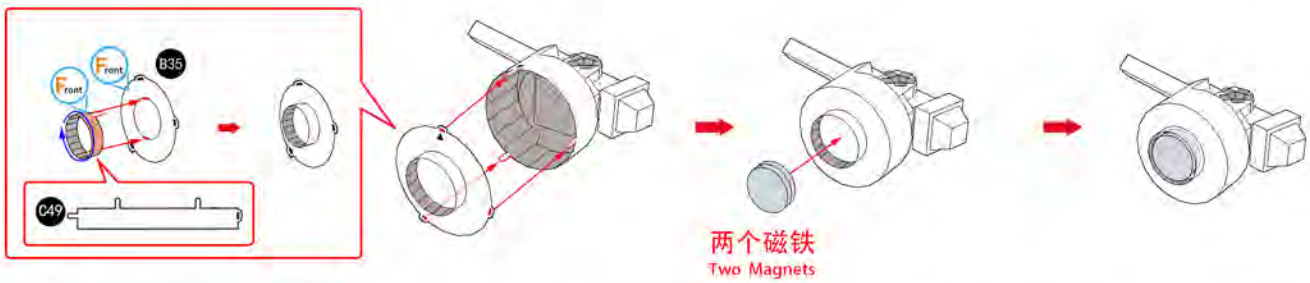

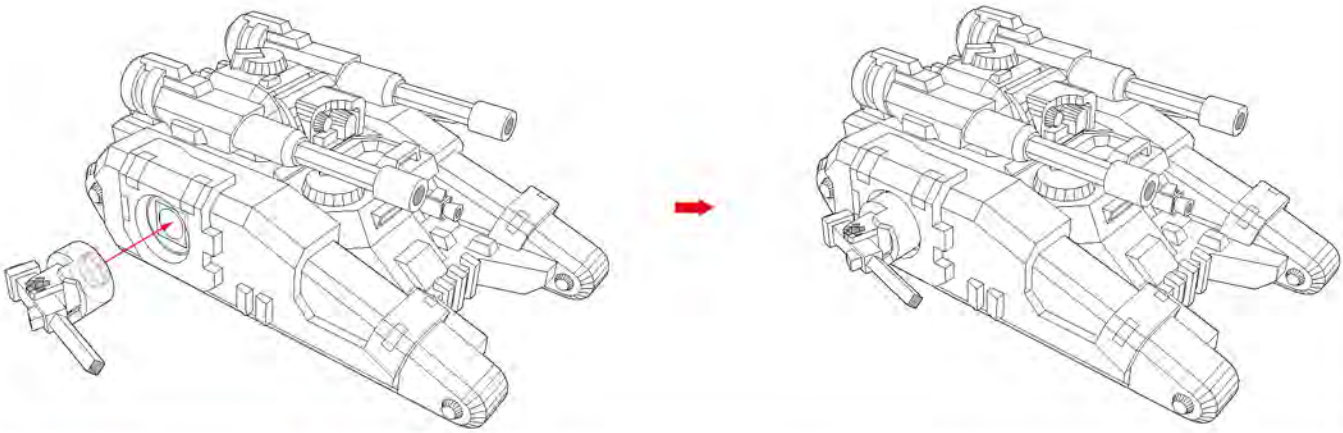

上海艺模电子科技有限公司
SHANGHAI ART MODEL ELECTRONIC SCIENCE AND TECHNOLOGY CO.,LTD
电话/Tel: 021-58942999
网址/Website: WWW.MAPLEMU.COM
产地/Address: 上海浦东新区川周公路5917弄1号

Design by: 因楠TEWI
猛太帅
YY

扫码加入微信公众号
解锁更多模型
Scan the two-dimensional code
Join us and unlock more models