MU 艺模
TRANSFORMERS
THE LAST KNIGHT
BUMBLEBEE
大黄蜂
YM-L036-C

# 大黄蜂 BUMBLEBEE

## 组装基本步骤示意图 ASSEMBLE THE BASIC STEP DIAGRAM

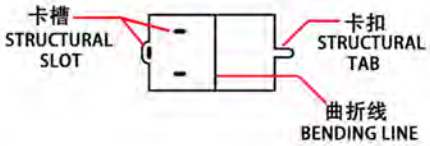

优先安装
Priority installation

折弯面
Bending surface

纹理面
Texture surface

非纹理面
Non - textured surface

固定方式一:
将卡扣穿过对应固定孔,
按对应角度曲折（图一）
Fitting method 1:
put the tab in the slot,
bend properly(p1)

固定方式二:
将卡扣穿过对应固定孔,
用钳子类工具垂直扭曲固定卡扣（图二）
Fitting method 2:
put the tab in the slot,
bend the tab vertically
with plier(p2).

卡扣向外固定
The buckle is fix outwards

垂直卡扣
Buckle upright

安装前可适当改变卡扣角度
Change the angle of the buckle properly before installation.

注意拼装前戴手指套
Take finger cots before assembly.

板件上附带序号，红色编号在非纹理面！
Metal plate with serial number,
red number on the non - textured surface!

部分零件有备用件！
Some parts have spare parts!

# 金属零件编号 METAL PART NUMBER

A

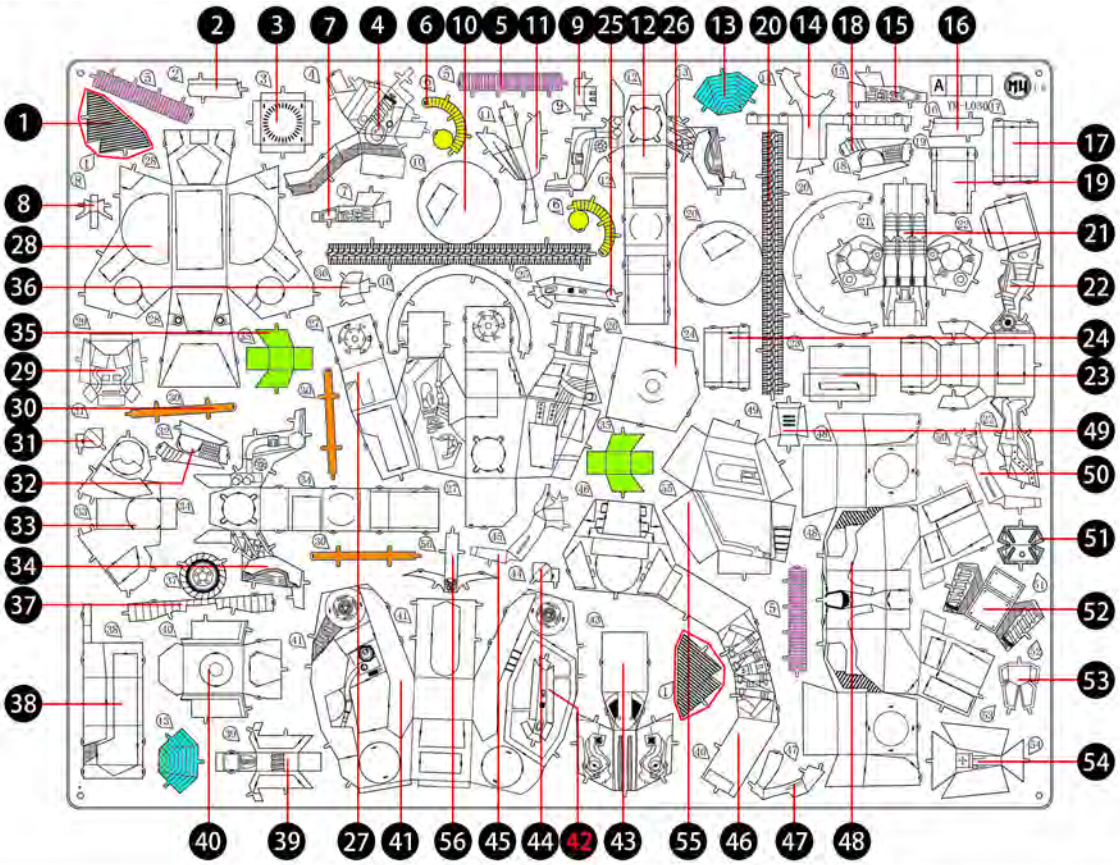


B

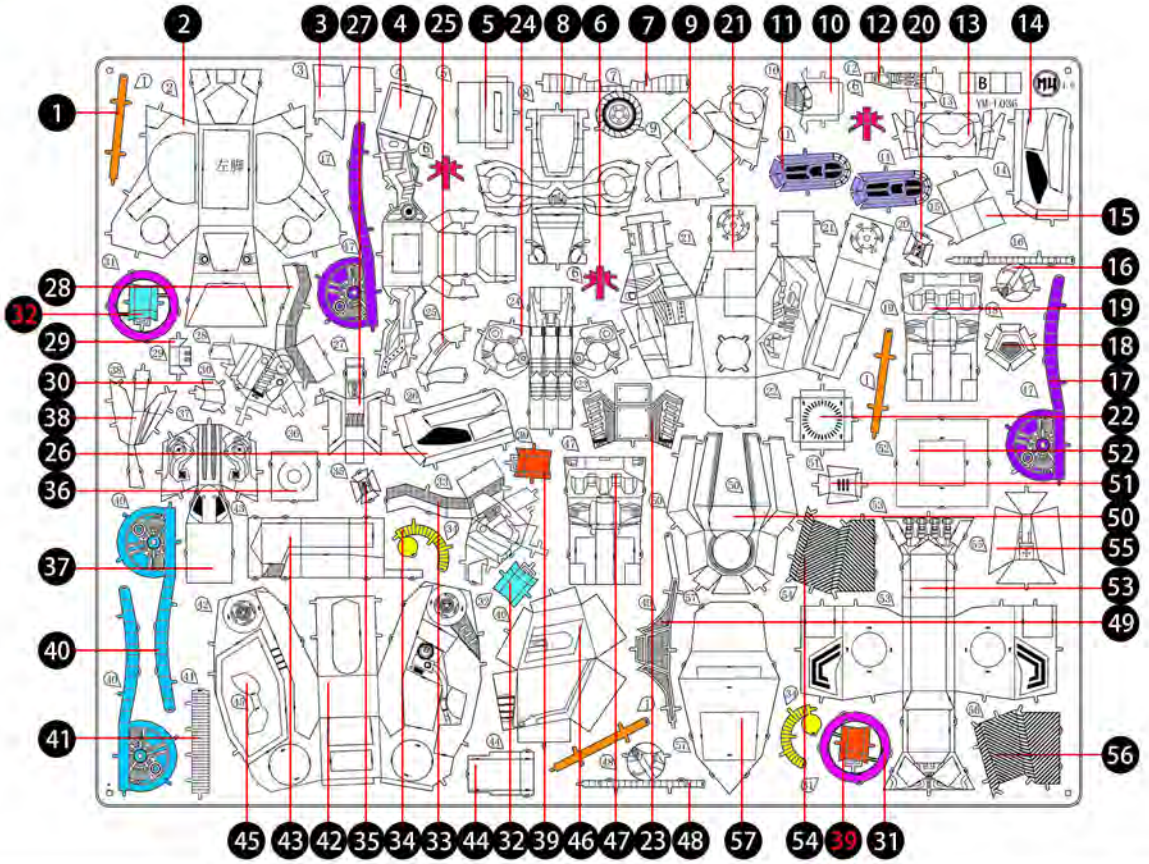

# 金属零件编号 METAL PART NUMBER

## C

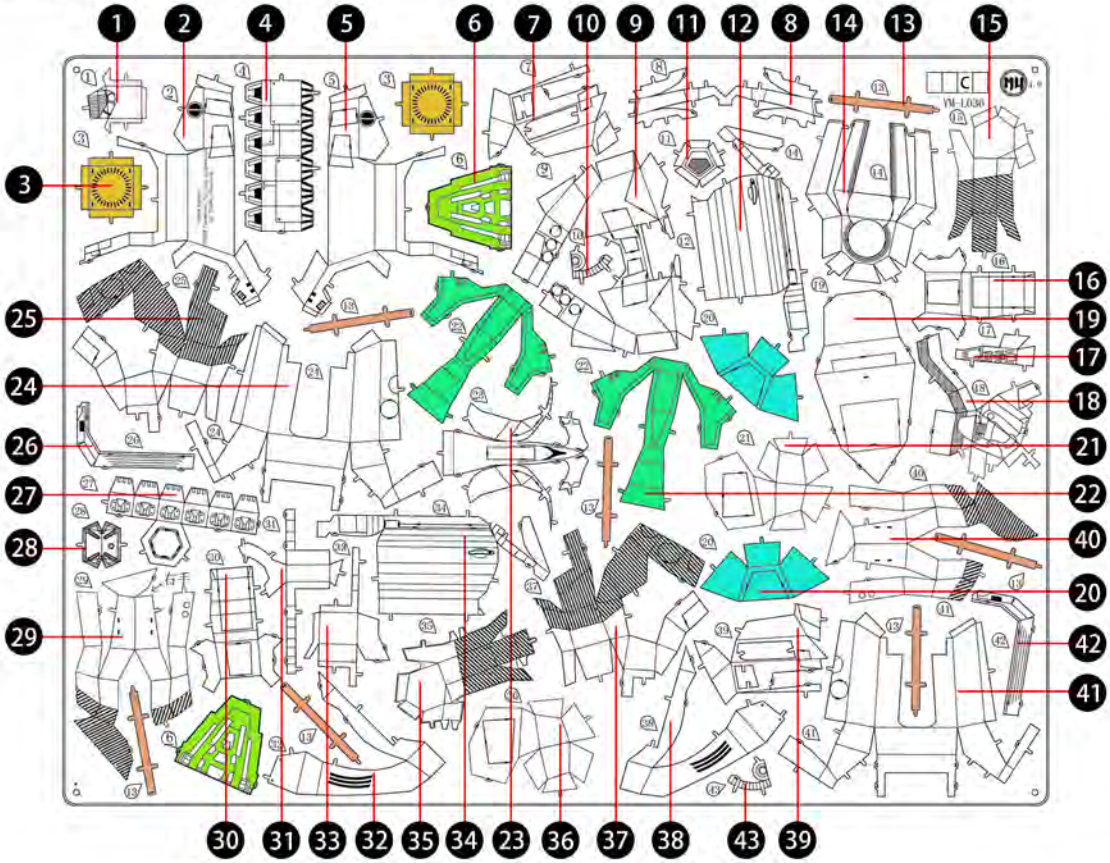


## D

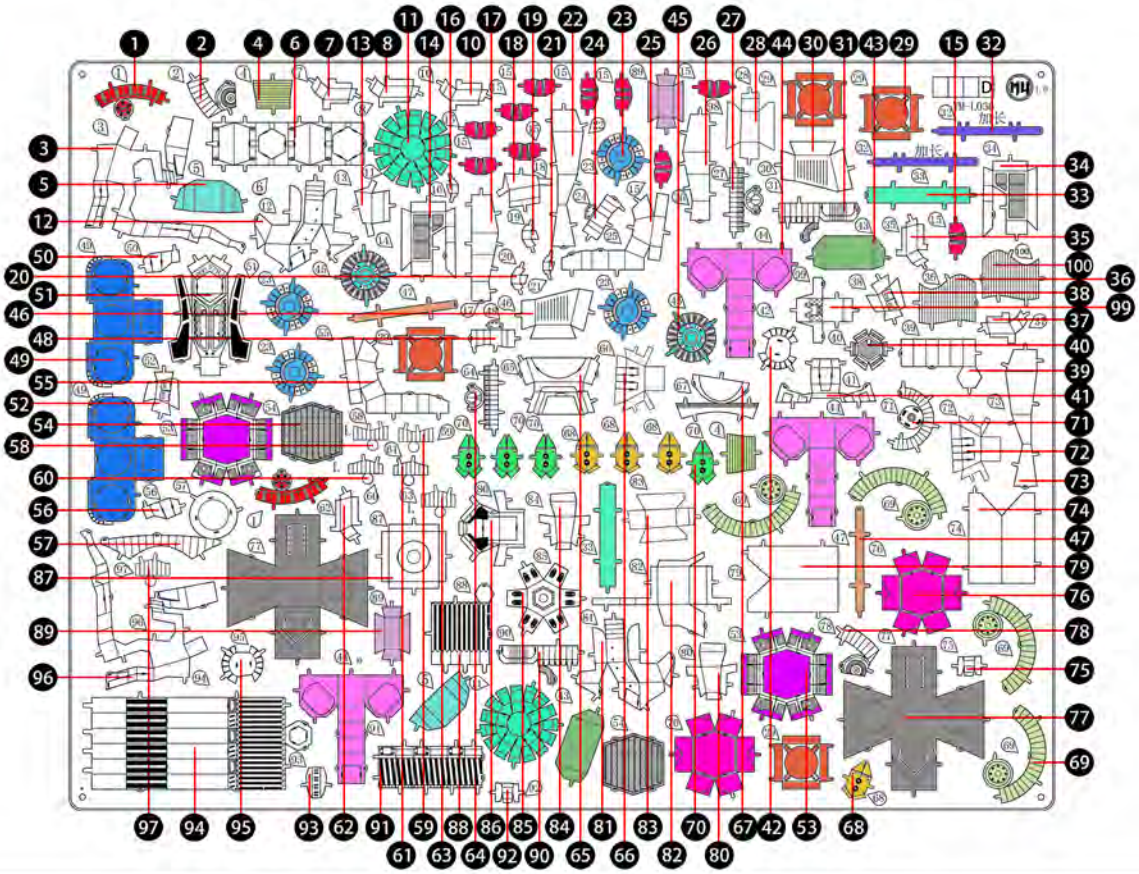

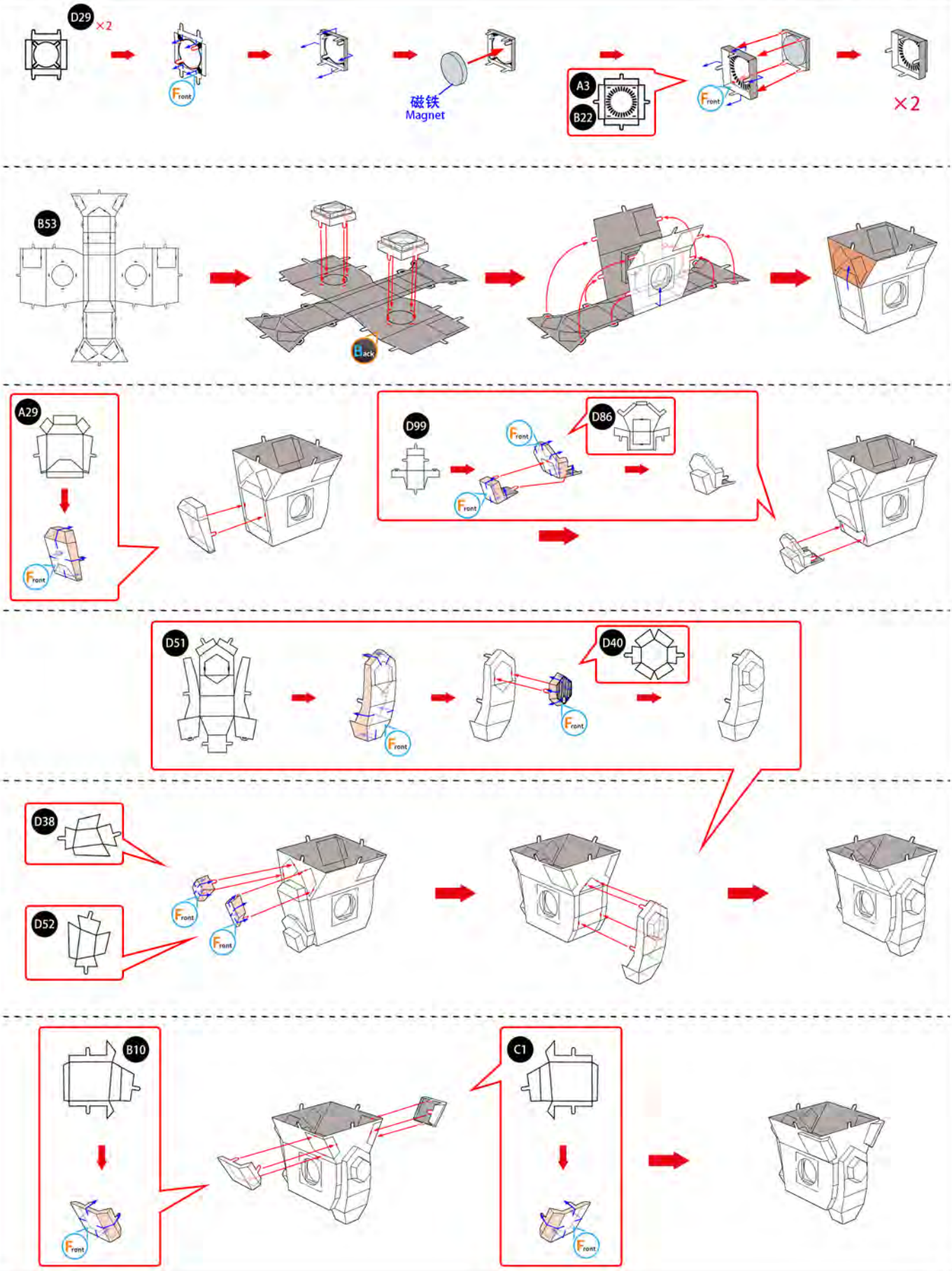
D29
×2
Front
磁铁
Magnet
A3
B22
Front
×2
B53
Back
A29
Front
D99
D86
Front
Front
D51
D40
Front
Front
D38
D52
Front
Front
B10
Front
C1
Front

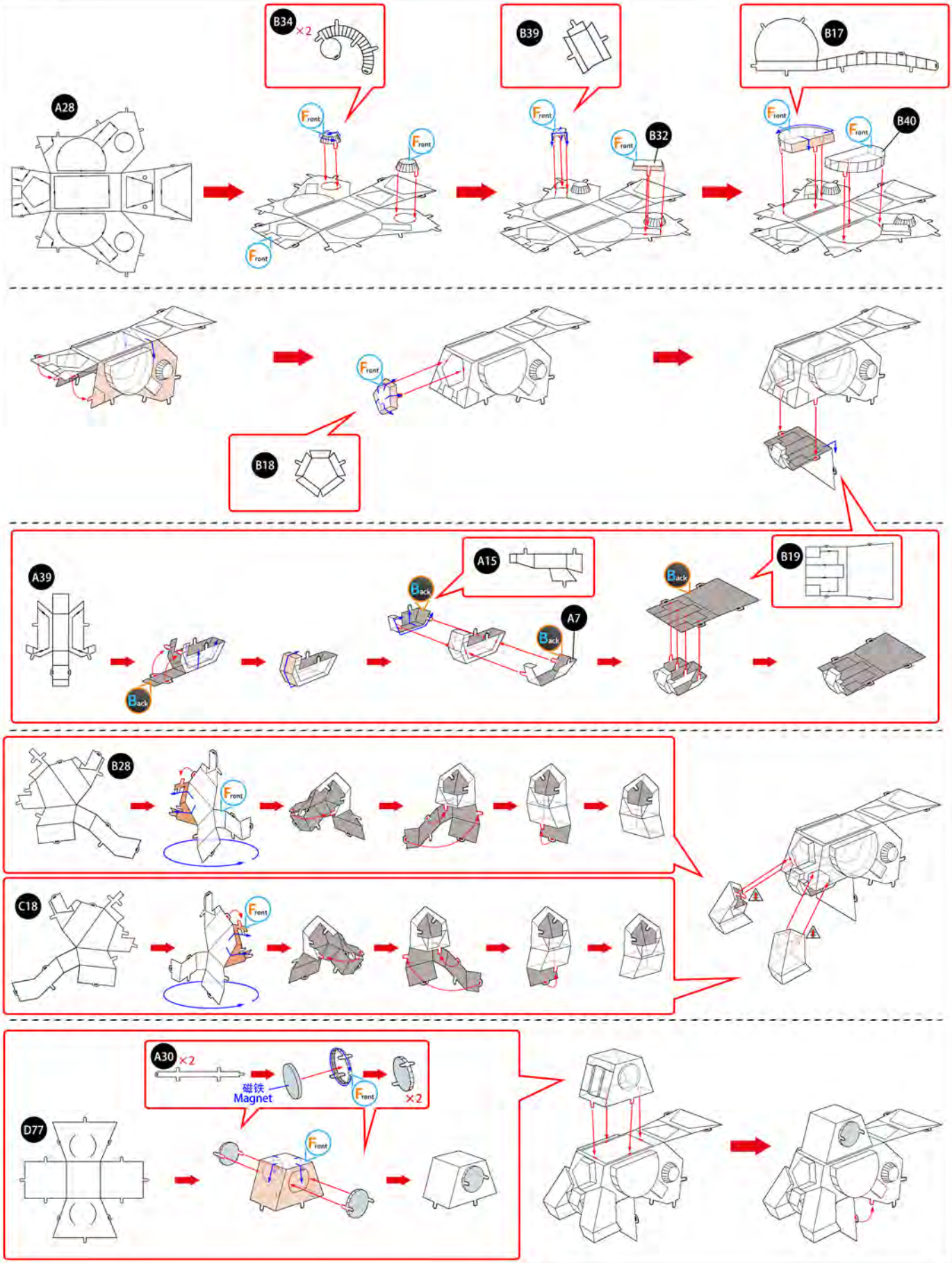
A28
B34 ×2
Front
B39
B32
B17
B40
B18
A39
Back
A15
A7
B19
B28
C18
A30 ×2
磁铁
Magnet
×2
D77

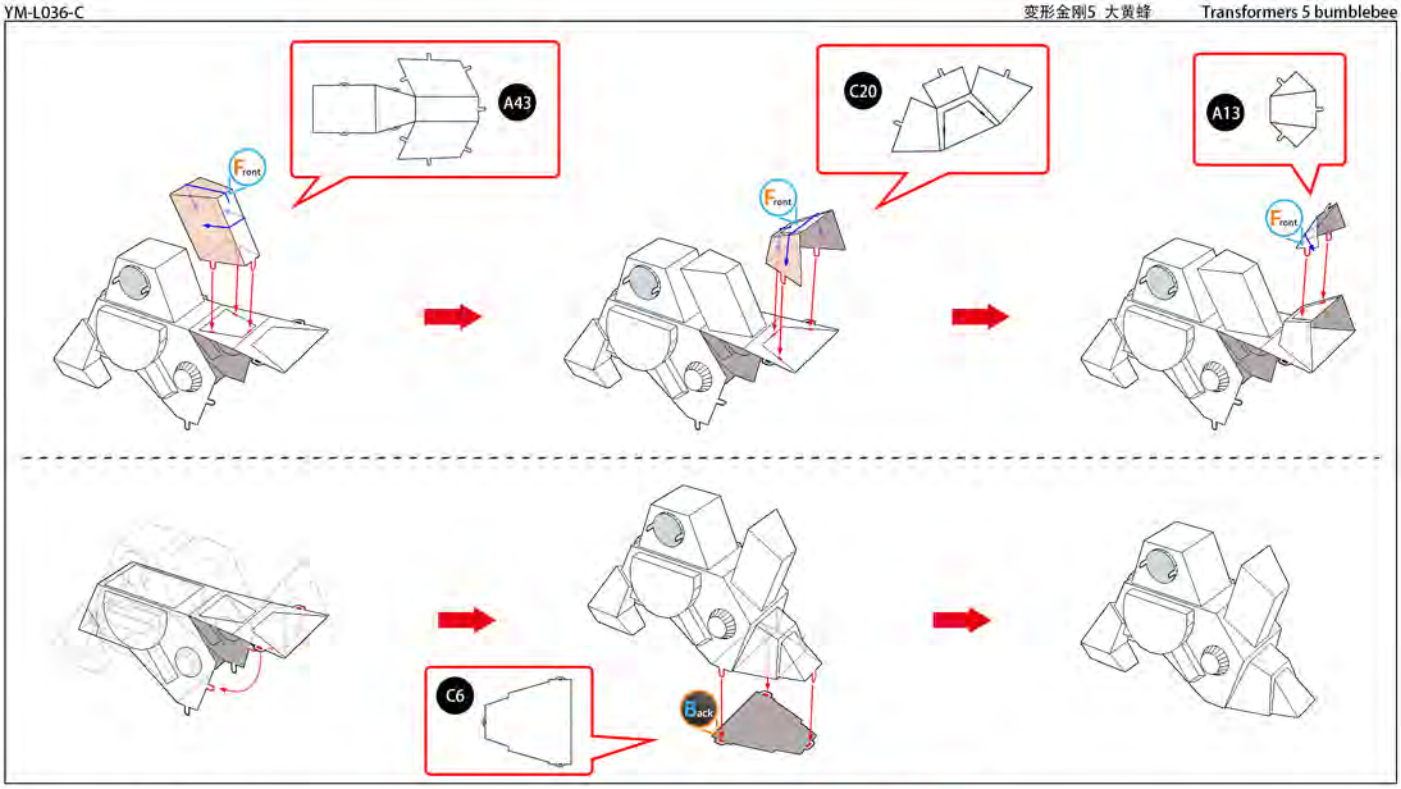
A43
Front
C20
Front
A13
Front
C6
Back

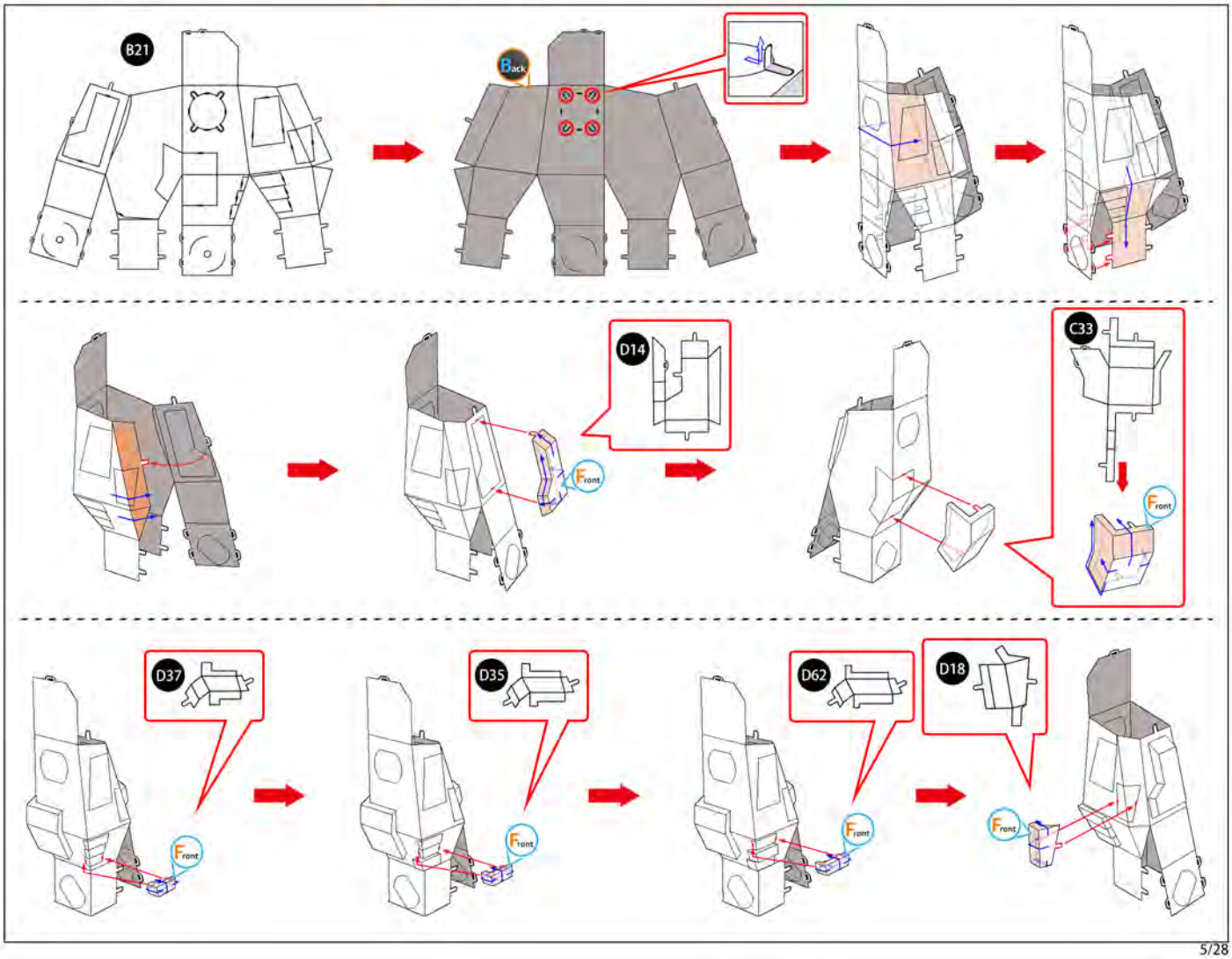
B21
Back
D14
Front
C33
Front
D37
Front
D35
Front
D62
Front
D18
Front

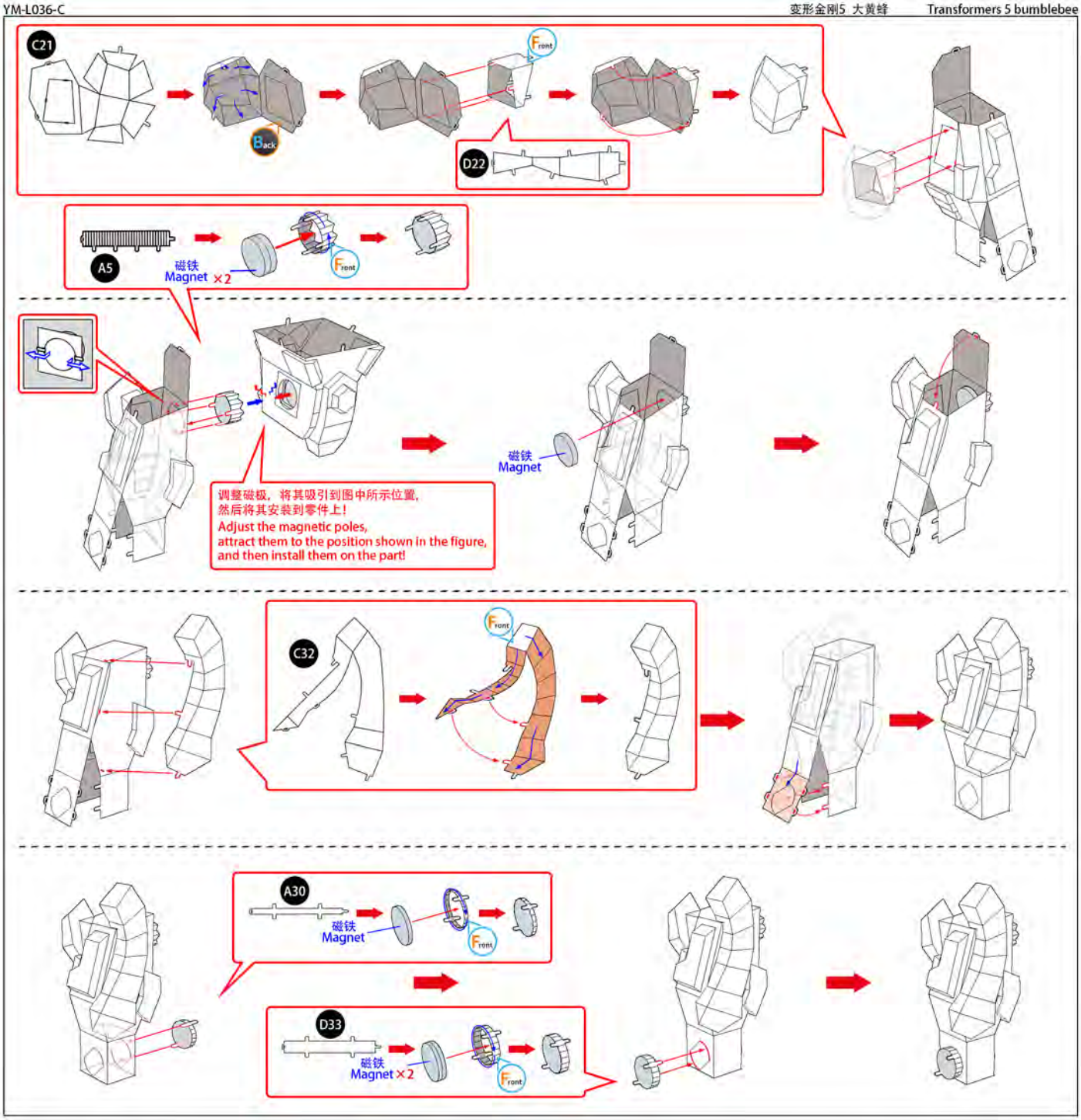
C21
Back
Front
D22
A5
磁铁
Magnet ×2
Front
磁铁
Magnet
调整磁极，将其吸引到图中所示位置，
然后将其安装到零件上！
Adjust the magnetic poles,
attract them to the position shown in the figure,
and then install them on the part!
C32
Front
A30
磁铁
Magnet
Front
D33
磁铁
Magnet ×2
Front

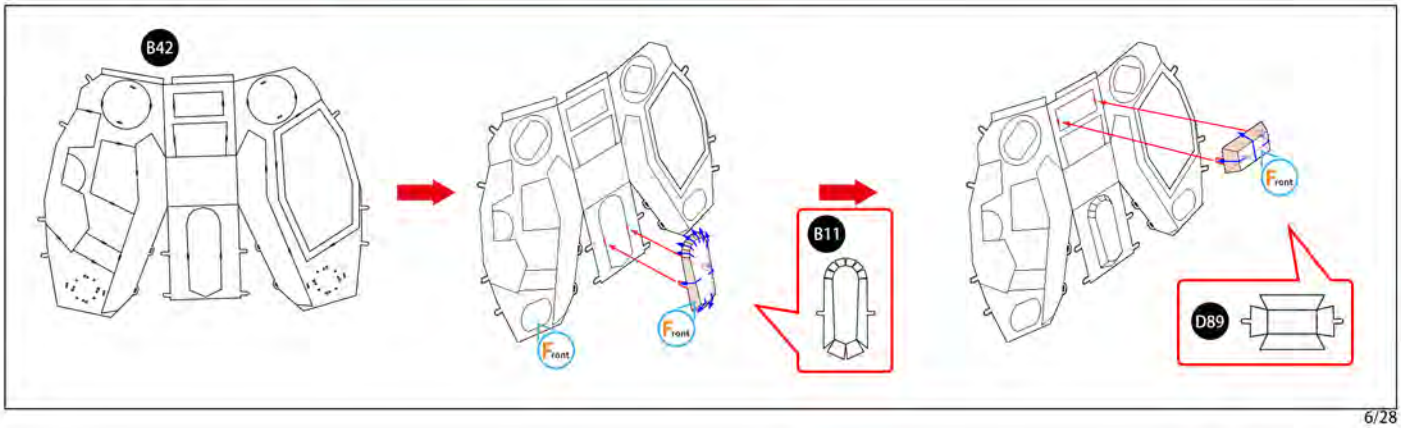
B42
Front
Front
B11
Front
D89

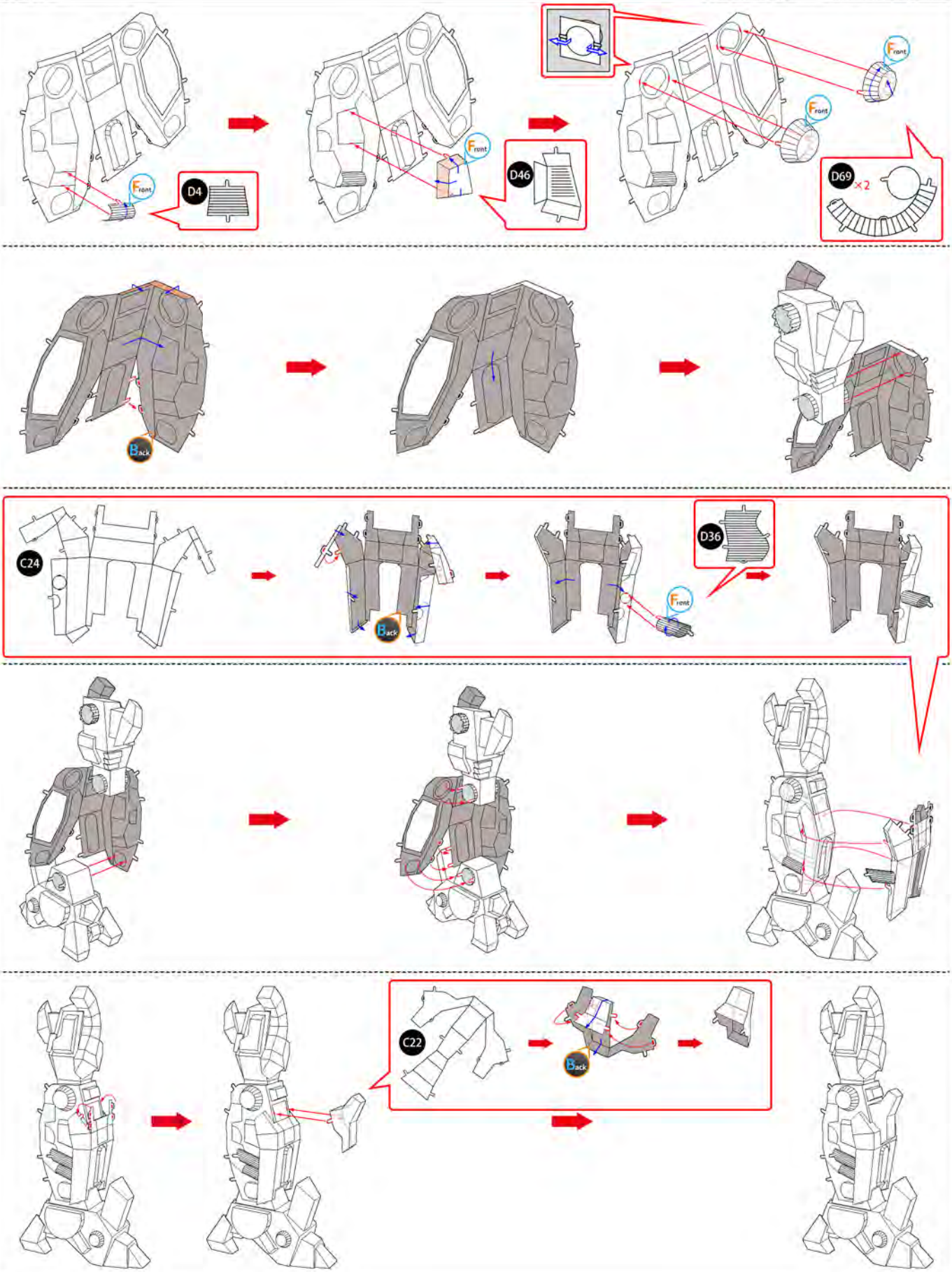
Front
D4
Front
D46
Front
Front
D69 ×2
Back
C24
Back
Front
D36
C22
Back

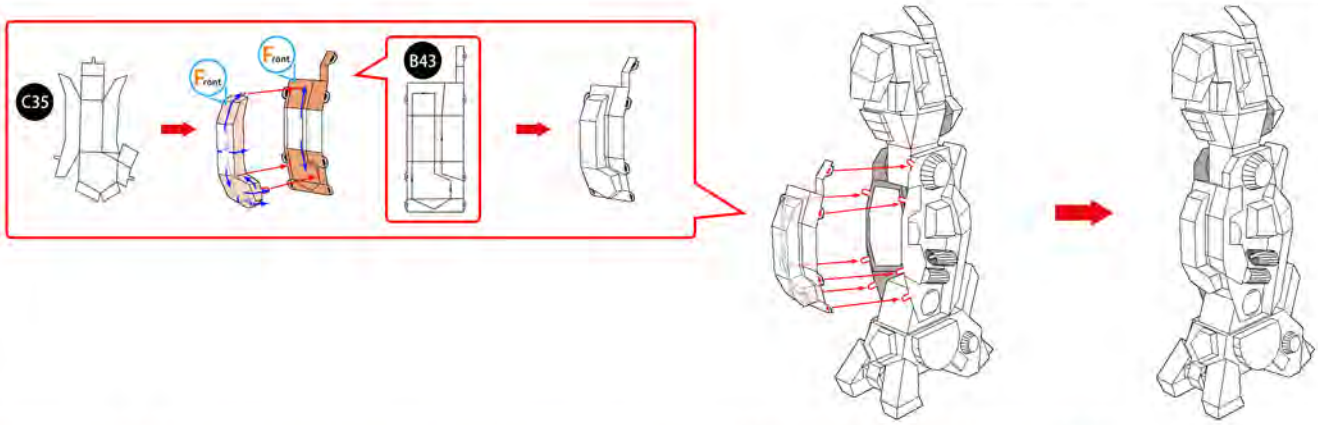
C35
Front
Front
B43

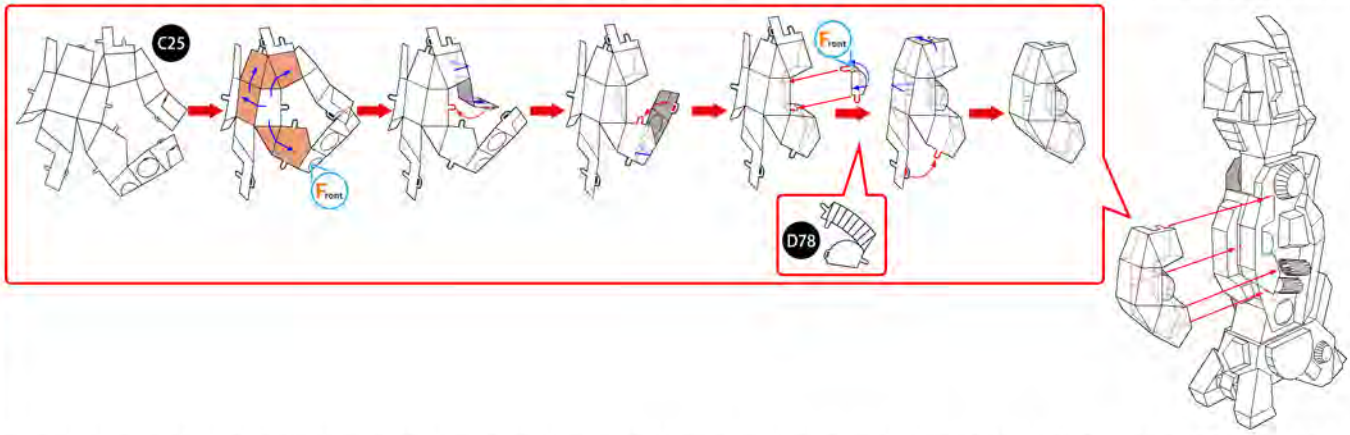
C25
Front
Front
D78

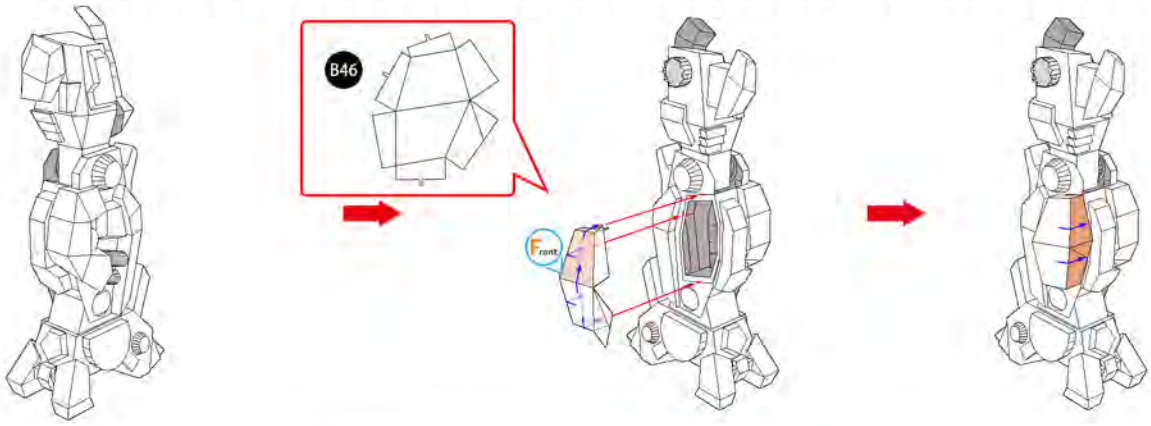
B46
Front

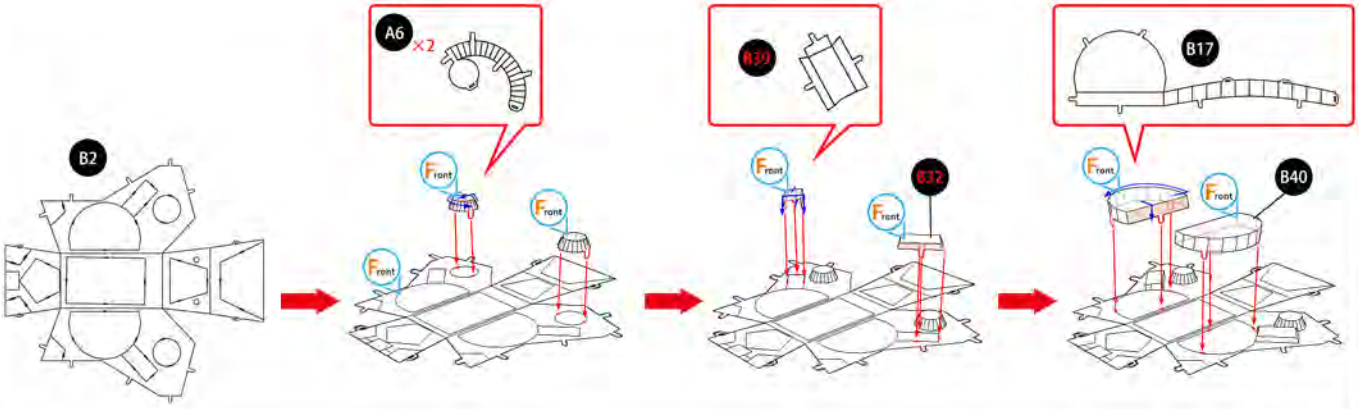
B2
A6
×2
Front
Front
Front
B39
Front
Front
B32
B17
Front
Front
B40

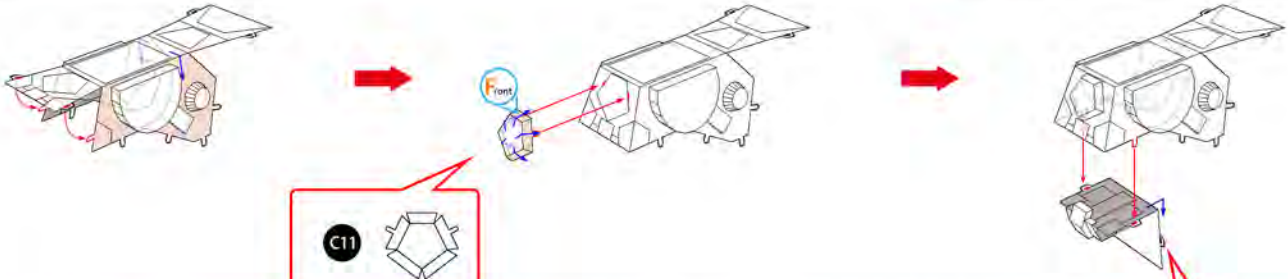
Front
C11

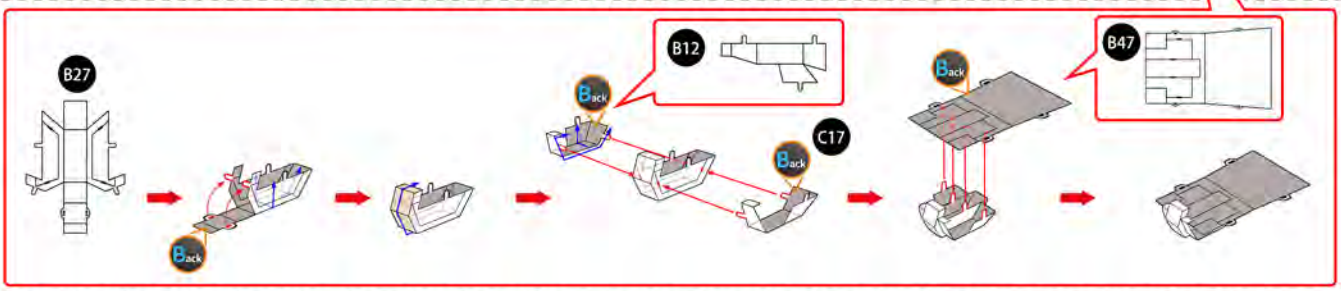
B27
Back
B12
Back
C17
Back
Back
B47

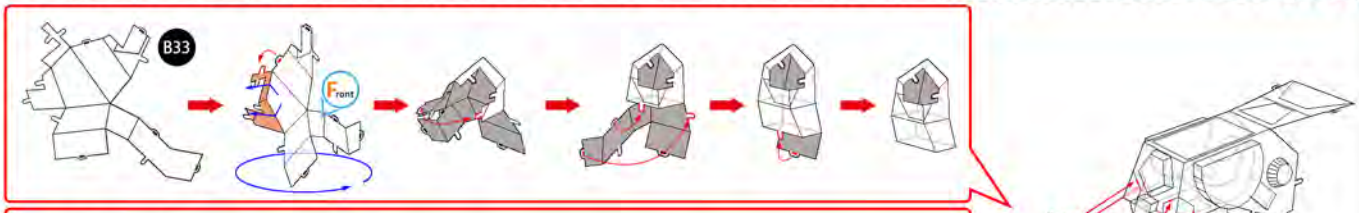
B33
Front

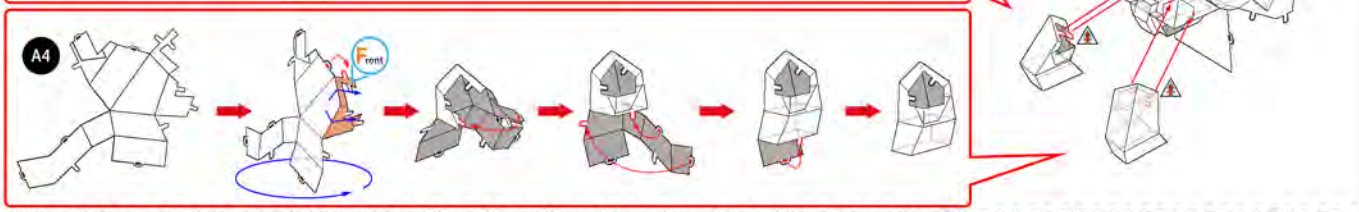
A4
Front

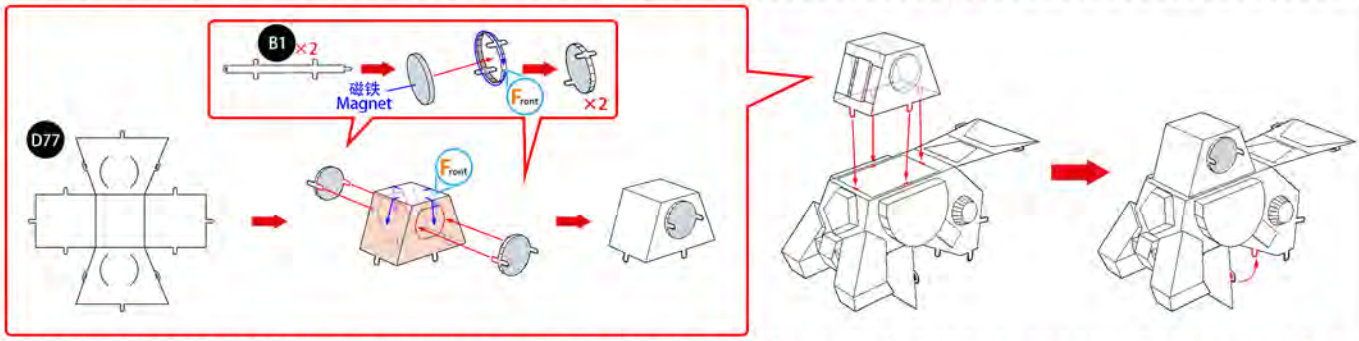
B1 ×2
磁铁
Magnet
Front
×2
D77
Front

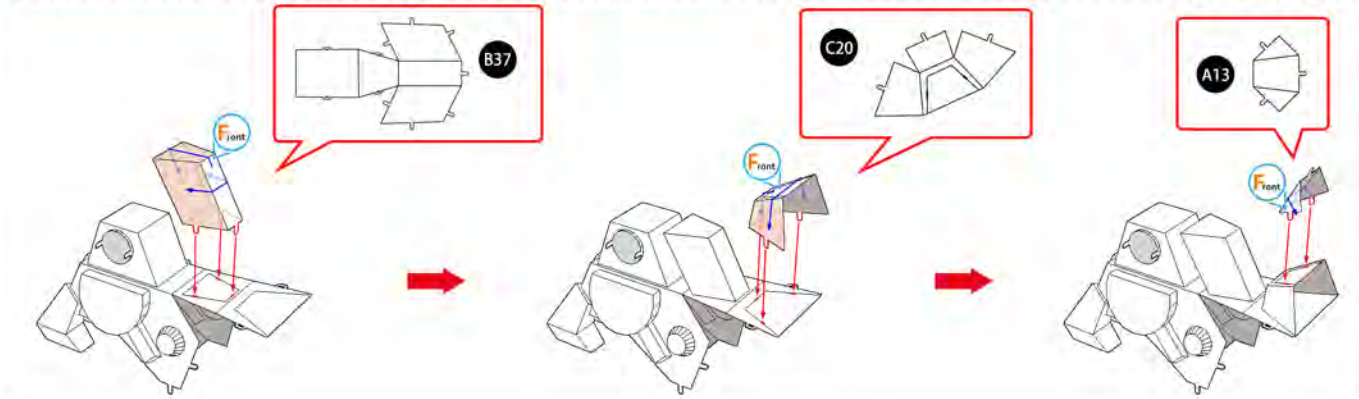
B37
Front
C20
Front
A13
Front

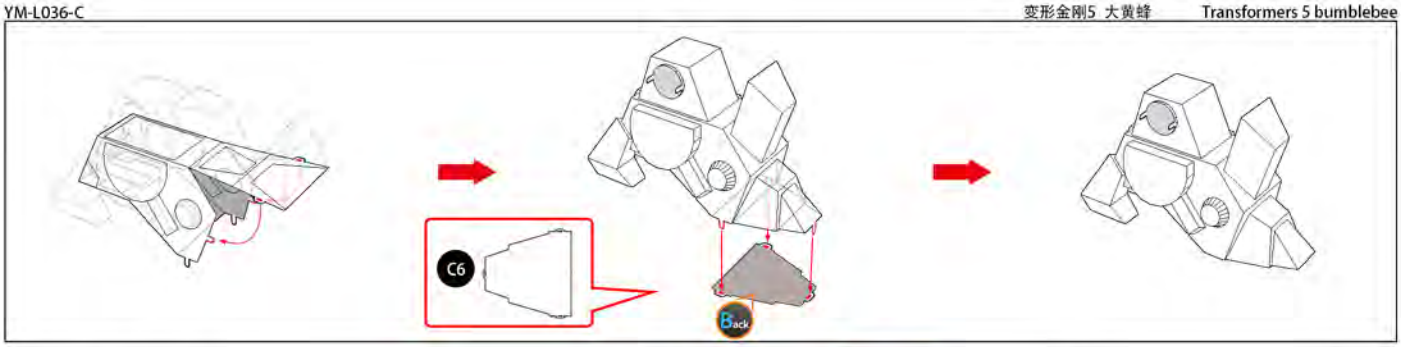
C6
Back

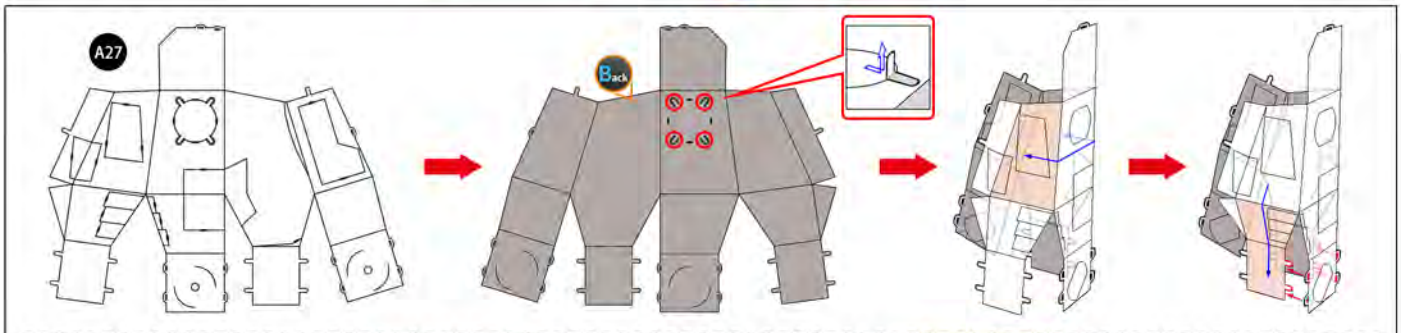
A27
Back

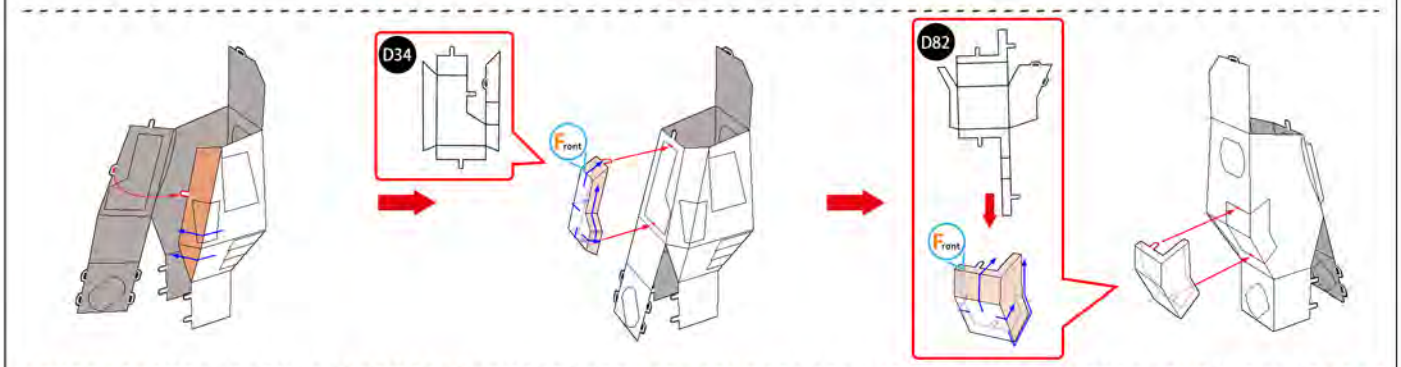
D34
Front
D82
Front

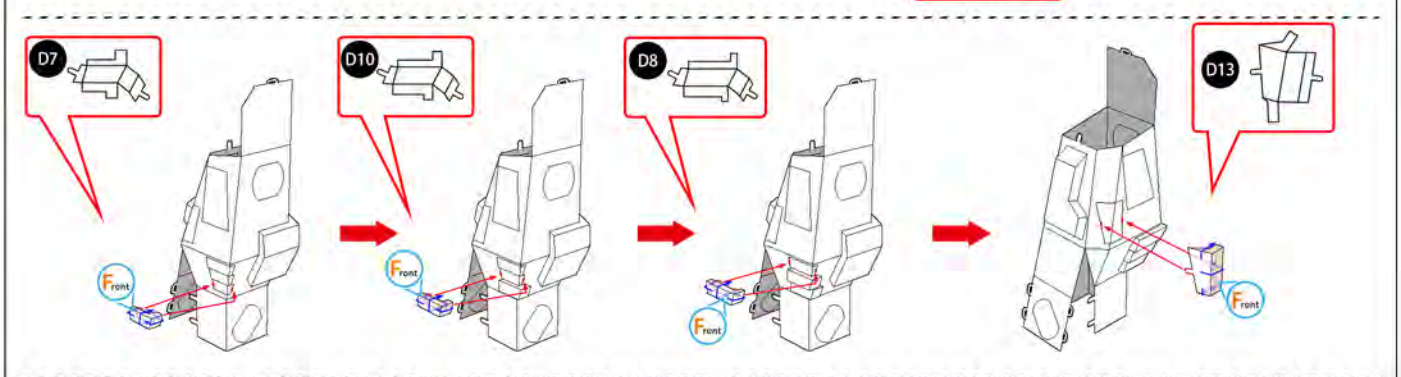
D7
Front
D10
Front
D8
Front
D13
Front

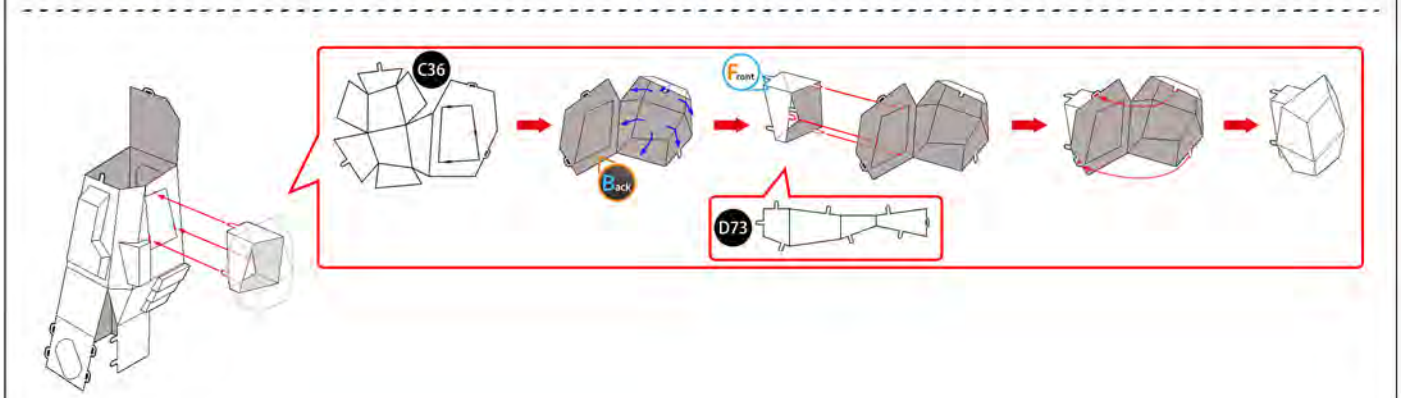
C36
Back
Front
D73

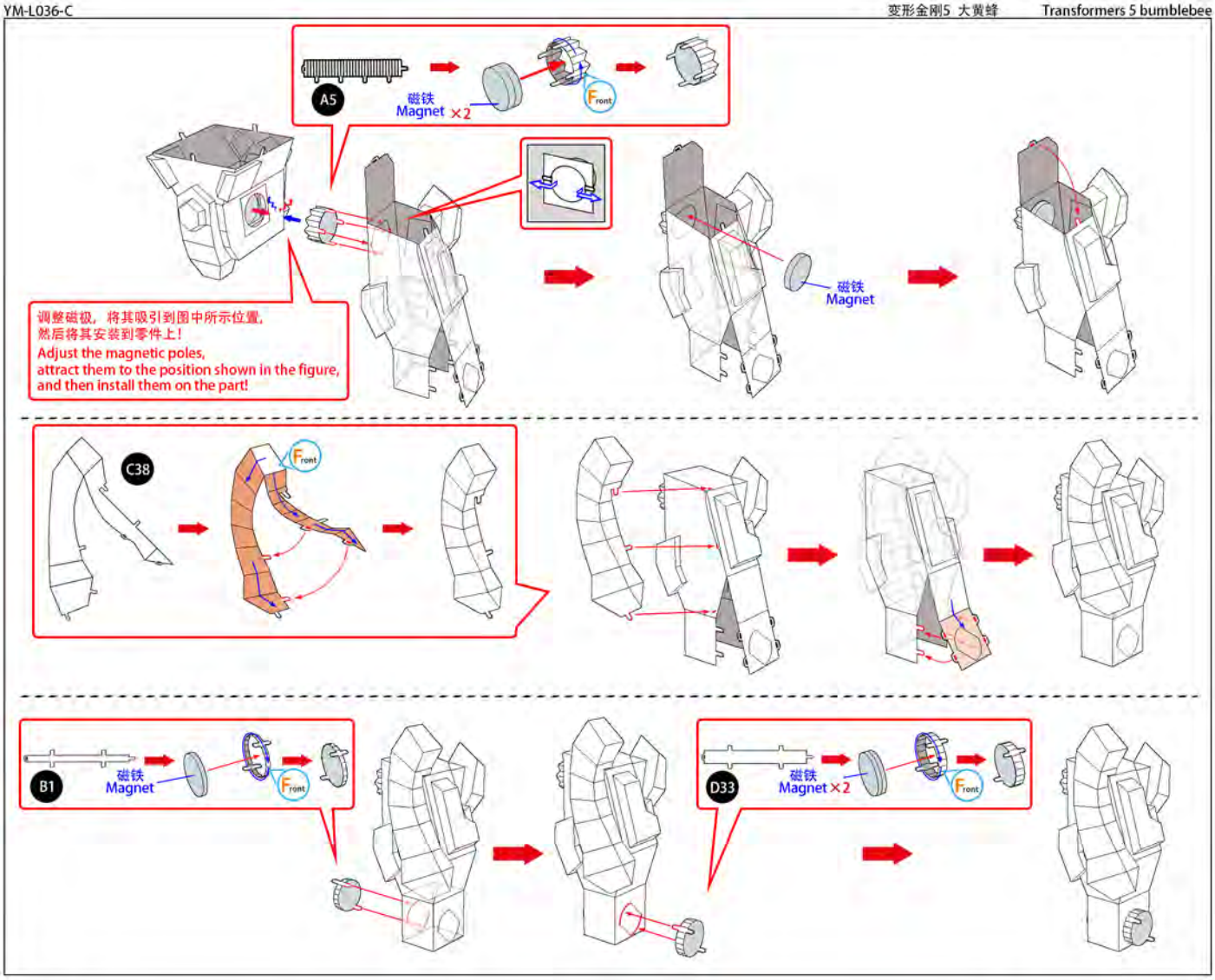
A5
磁铁
Magnet ×2
Front
磁铁
Magnet
调整磁极，将其吸引到图中所示位置，
然后将其安装到零件上！
Adjust the magnetic poles,
attract them to the position shown in the figure,
and then install them on the part!
C38
Front
B1
磁铁
Magnet
Front
D33
磁铁
Magnet ×2
Front

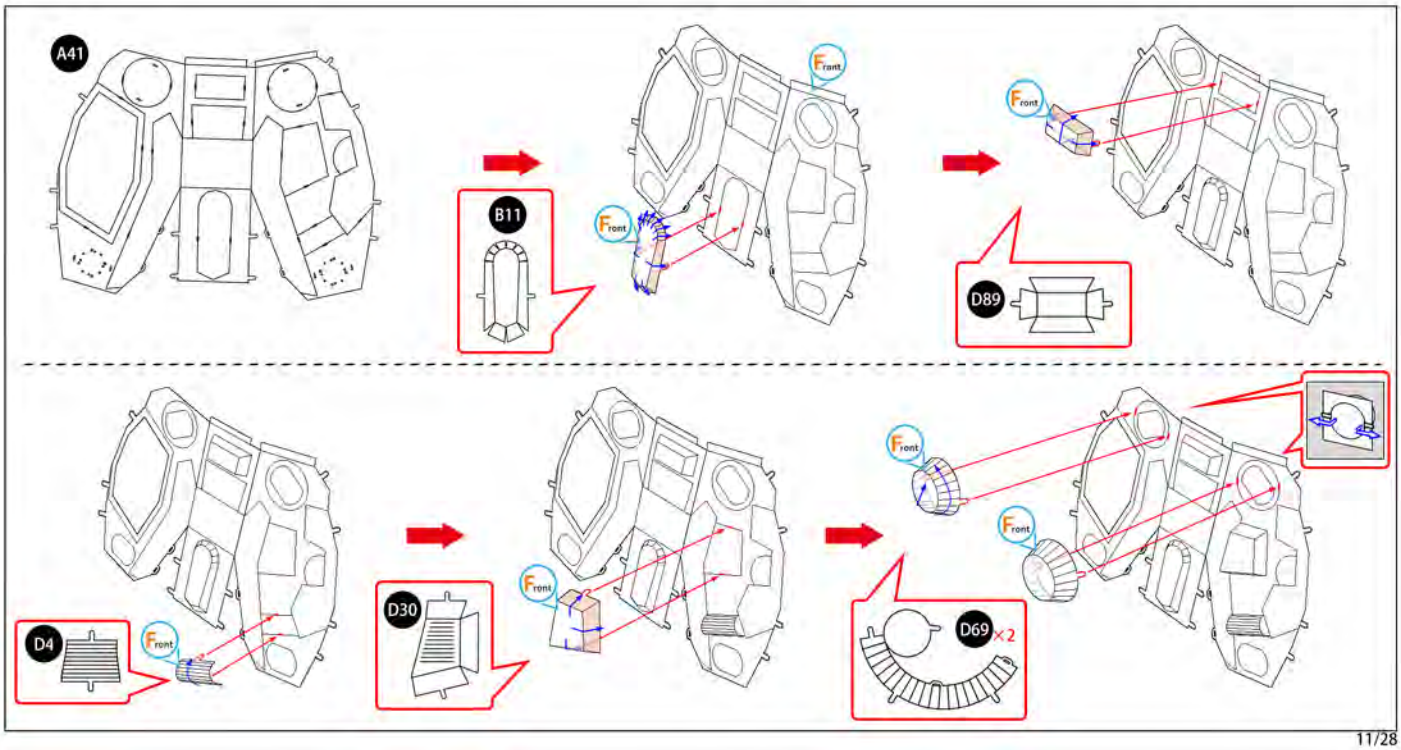
A41
B11
Front
Front
Front
D89
D4
Front
D30
Front
Front
Front
D69 ×2

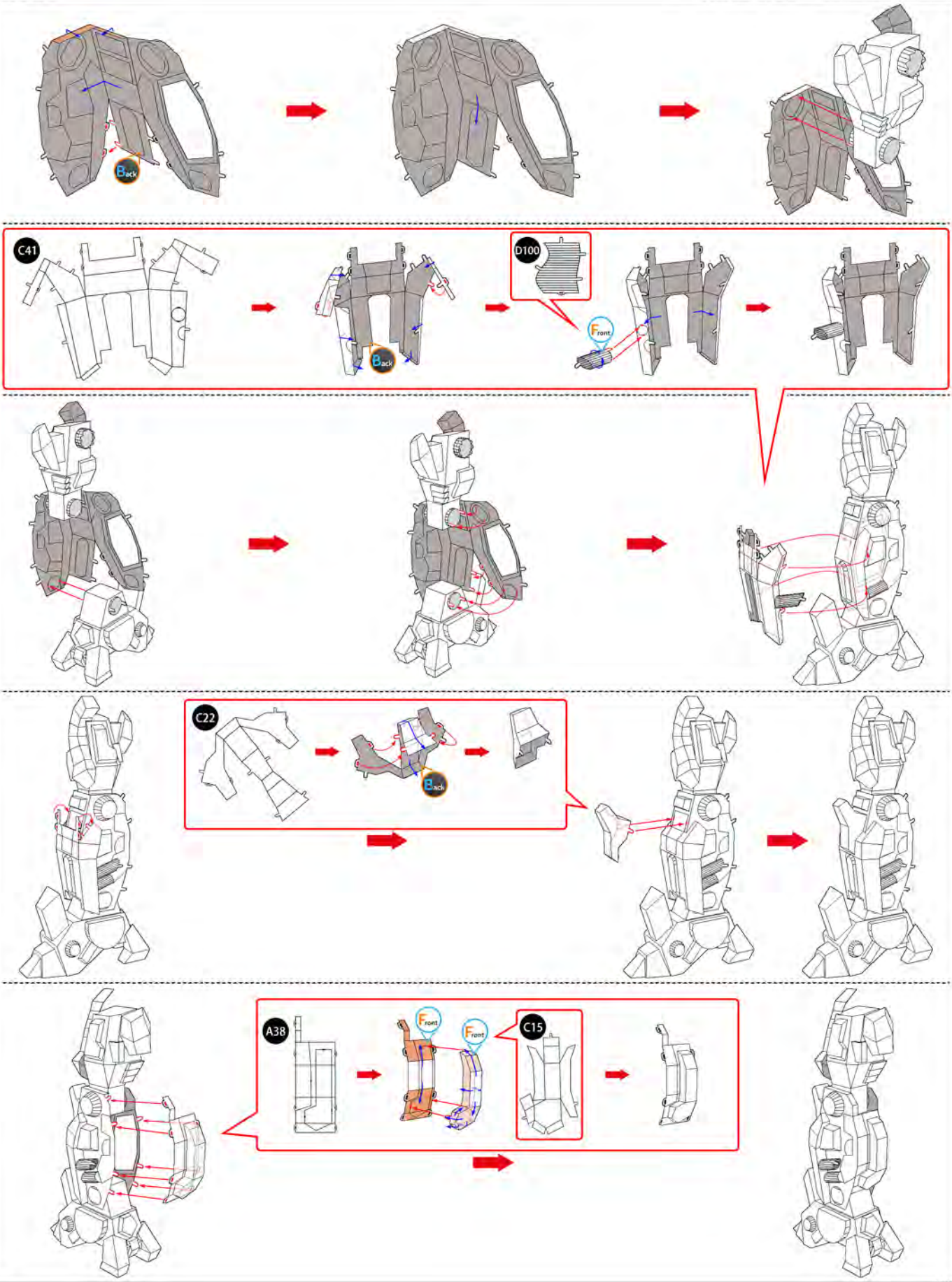
Back
C41
Back
D100
Front
C22
Back
A38
Front
Front
C15

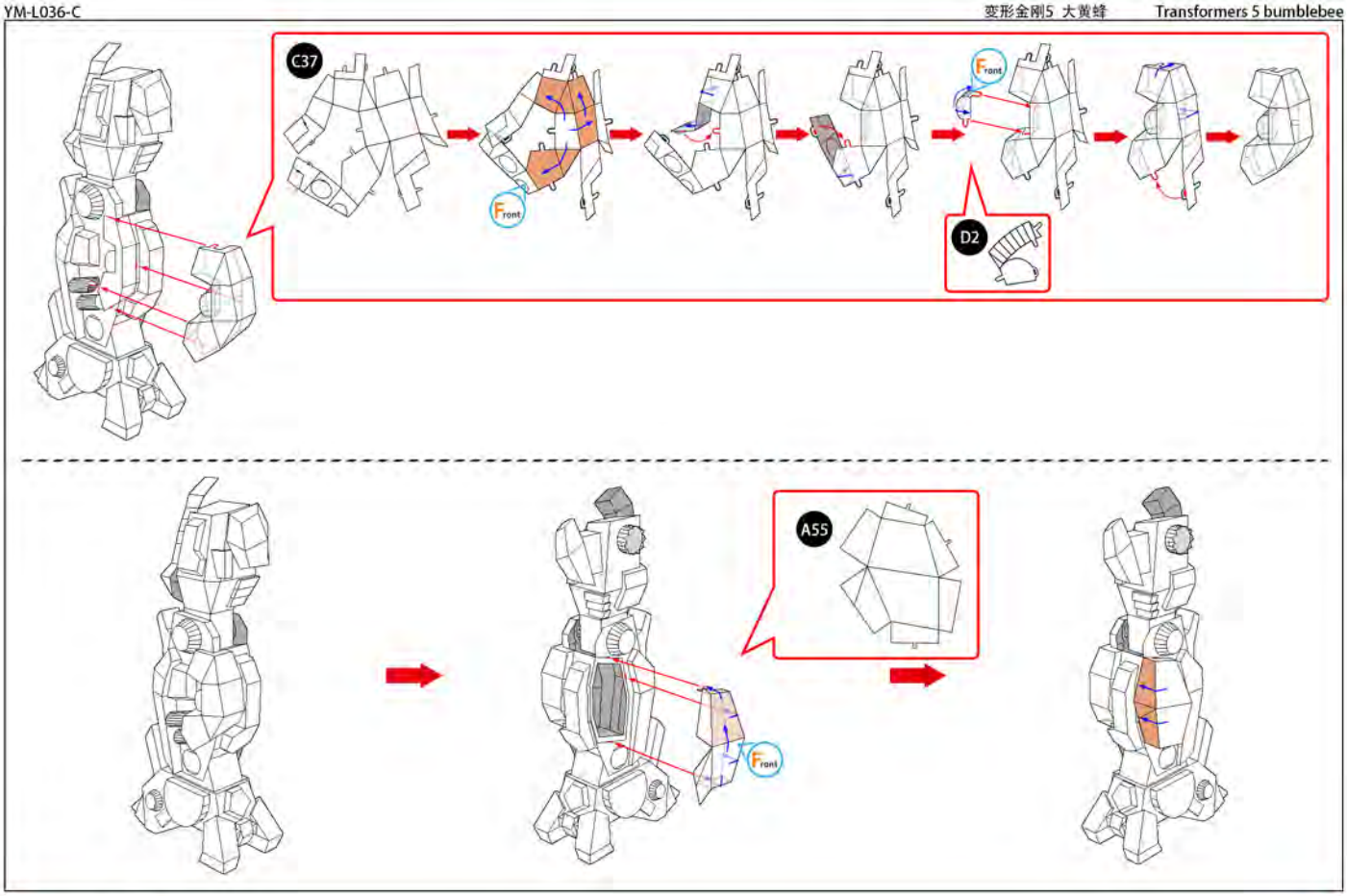
C37
Front
Front
D2
A55
Front

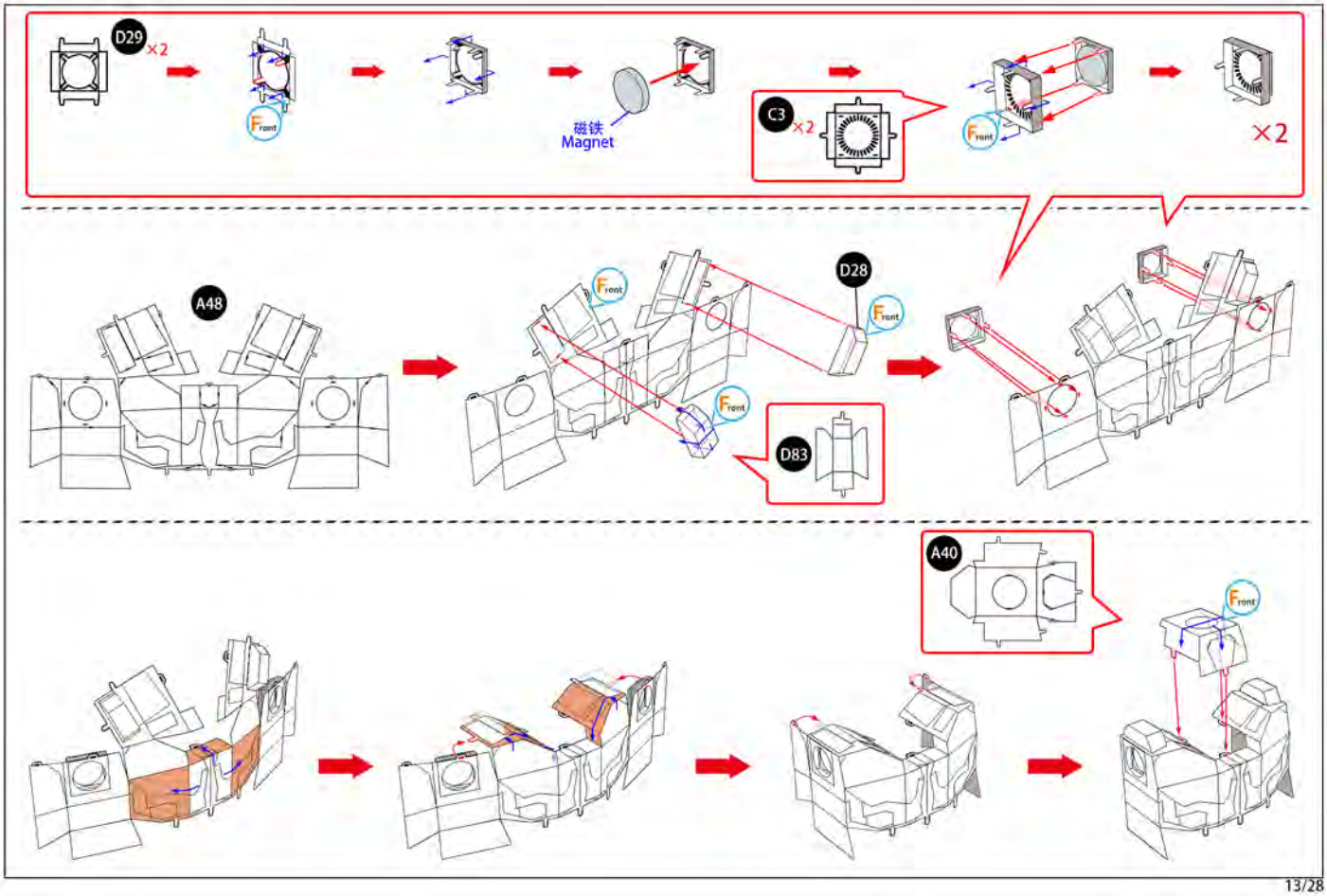
D29 ×2
Front
磁铁
Magnet
C3 ×2
Front
×2
A48
Front
D28
Front
Front
D83
A40
Front

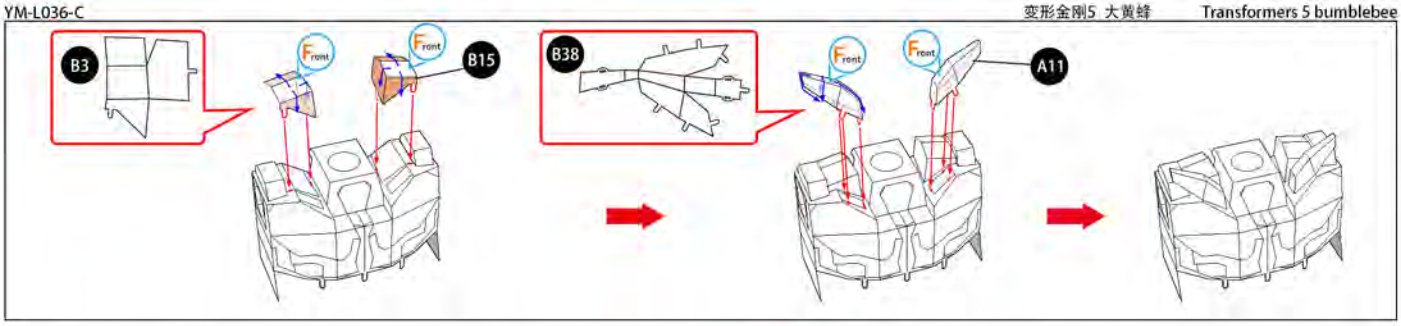
B3
Front
Front
B15
B38
Front
Front
A11

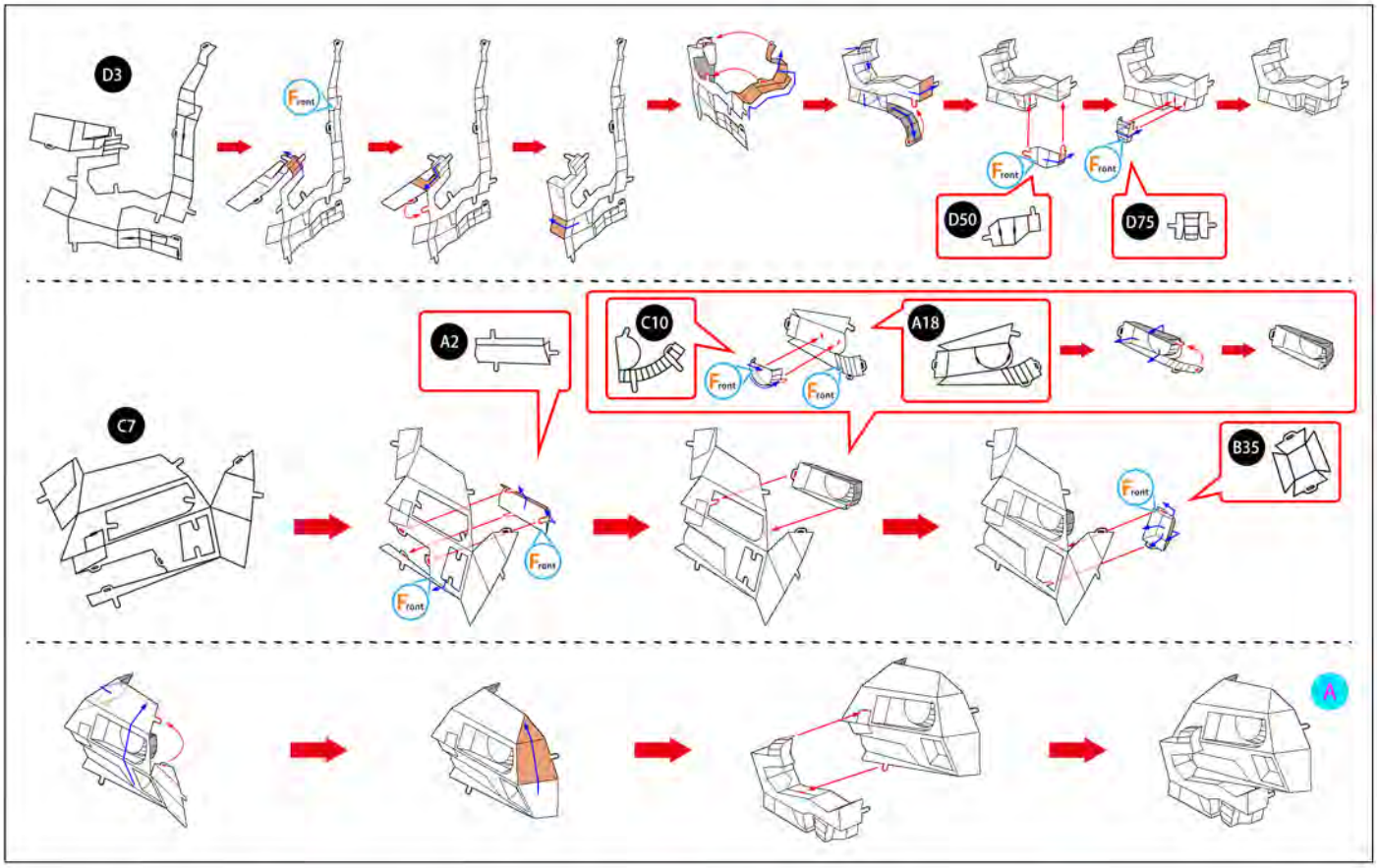
D3
Front
Front
Front
D50
D75
A2
C10
Front
Front
A18
C7
Front
Front
B35
Front
A

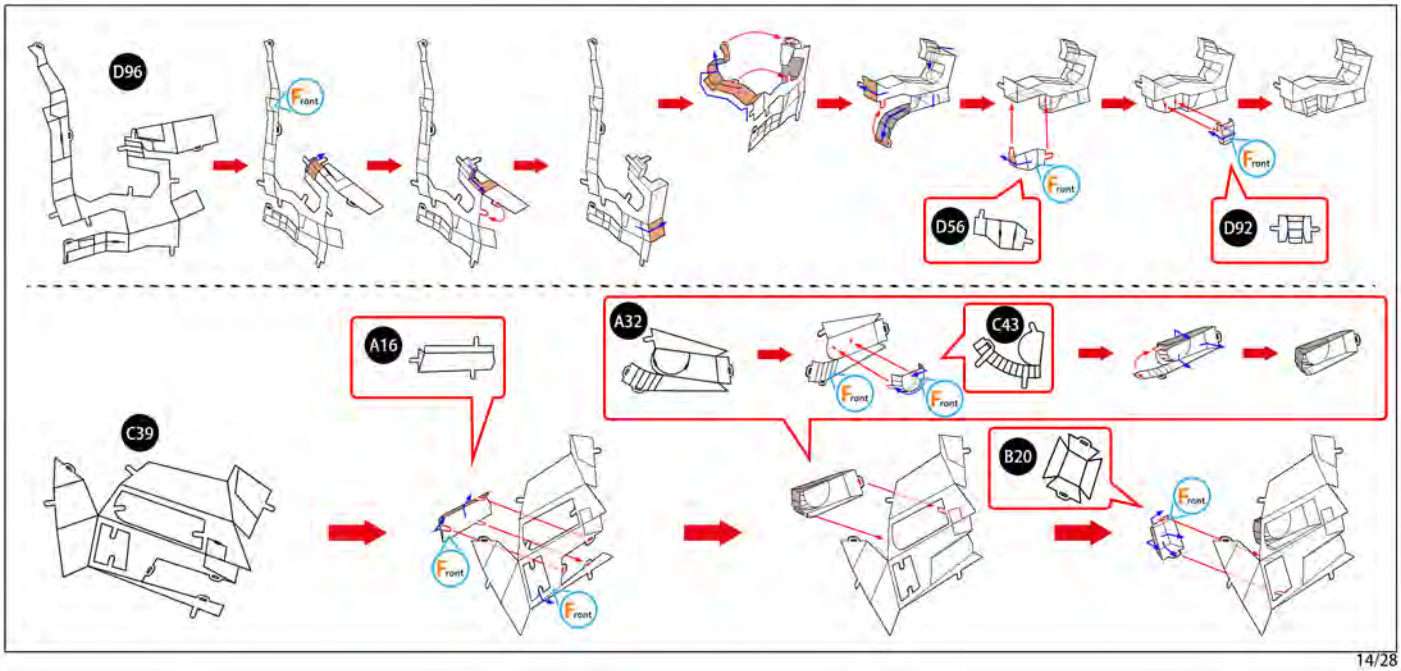
D96
Front
Front
D56
D92
A16
A32
Front
Front
C43
C39
Front
Front
B20
Front

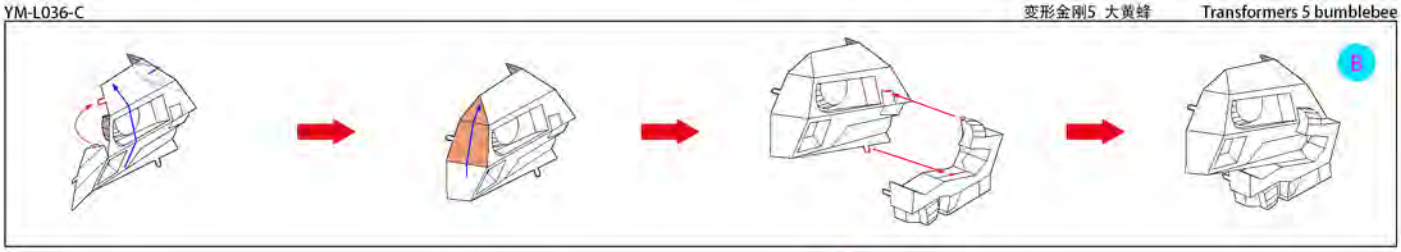
B

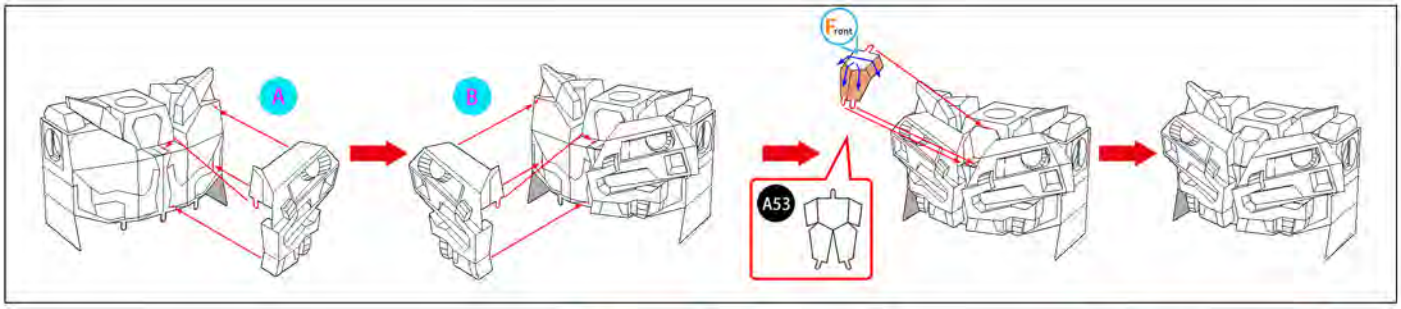
A
B
Front
A53

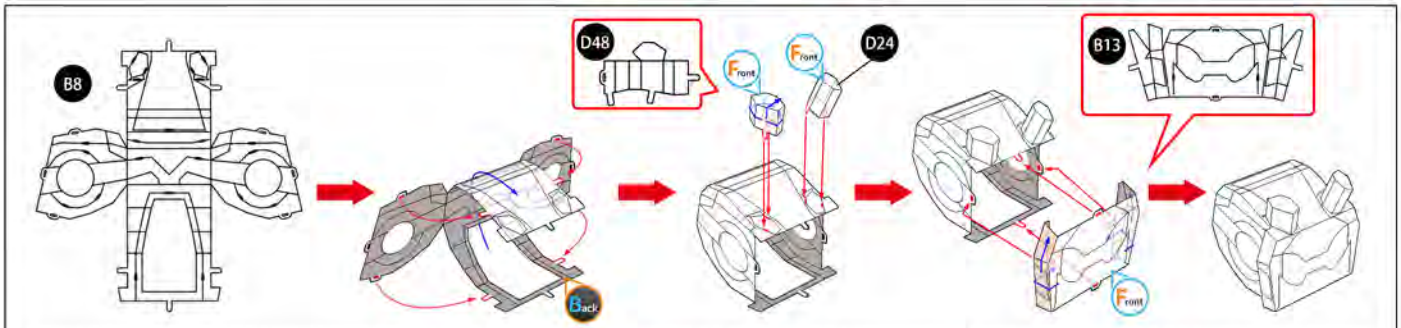
B8
D48
Front
Front
D24
B13
Back
Front

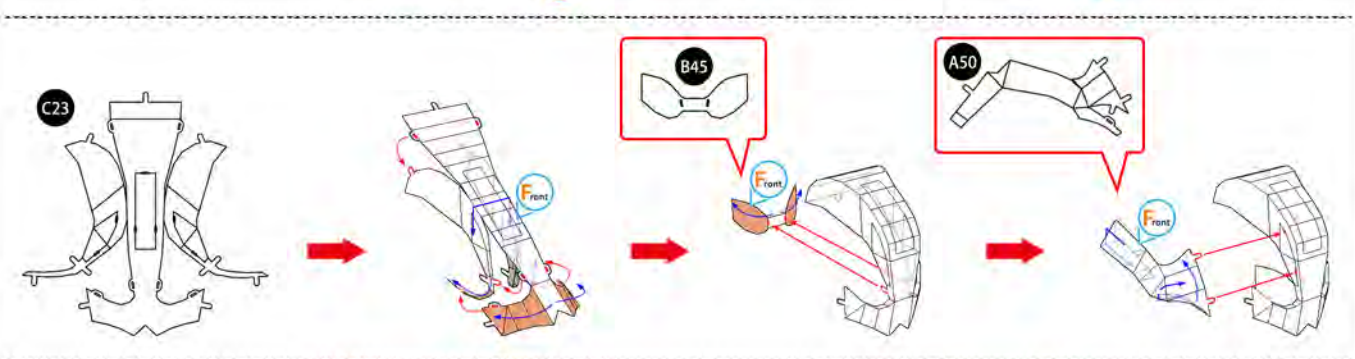
C23
Front
B45
Front
A50
Front

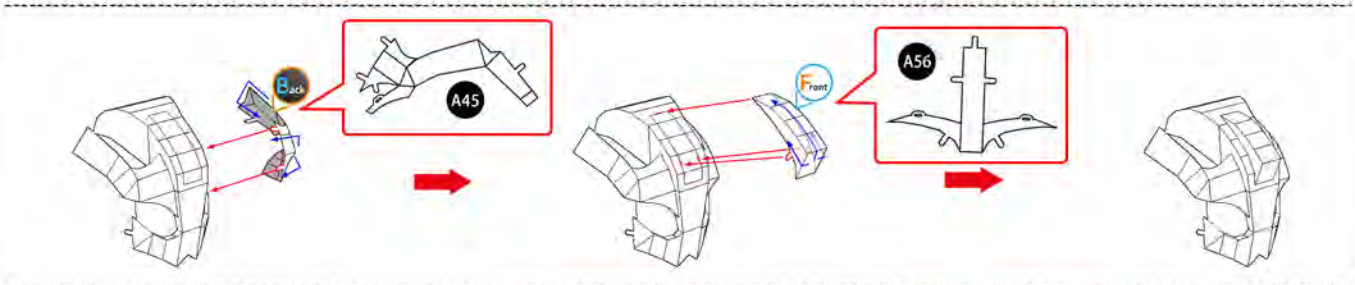
Back
A45
Front
A56

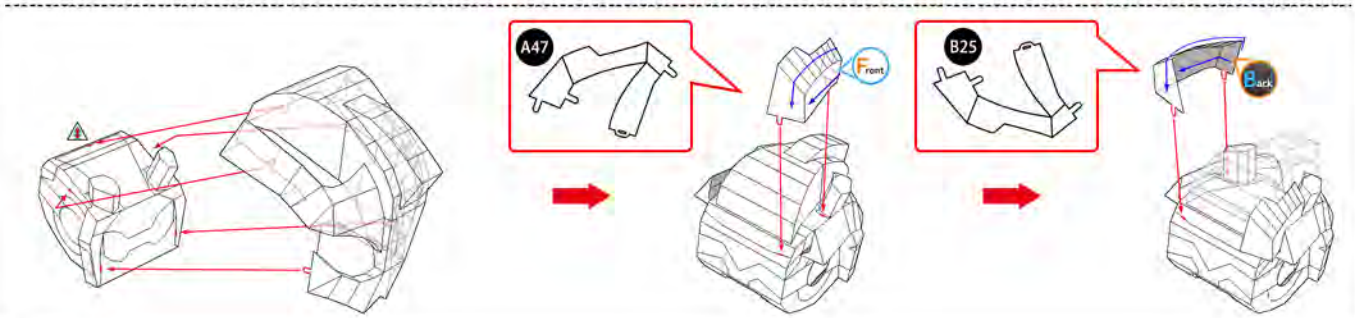
A47
Front
B25
Back

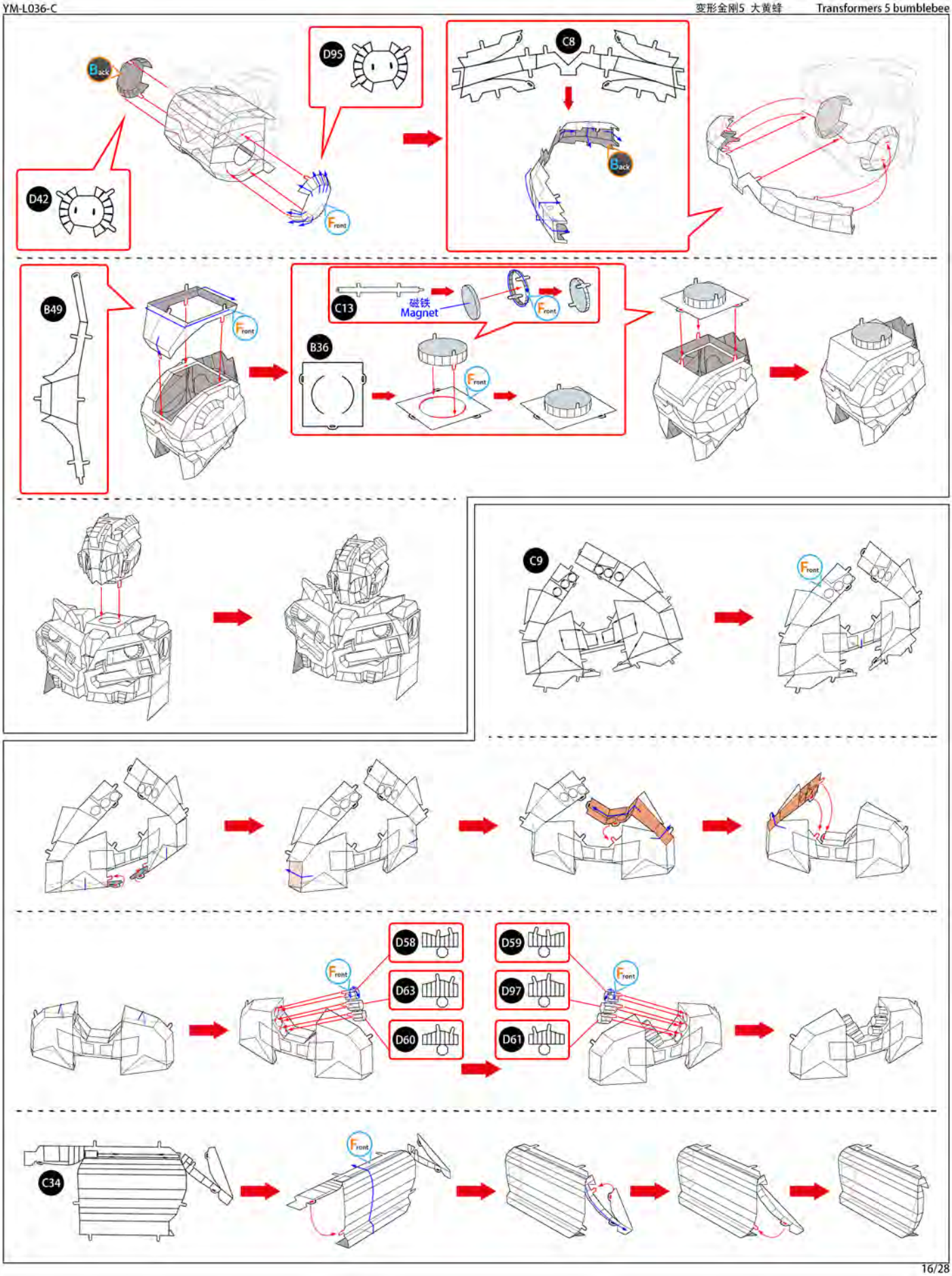
Back
D95
D42
Front
C8
Back
B49
Front
C13
磁铁
Magnet
Front
B36
Front
C9
Front
D58
D63
D60
Front
D59
D97
D61
Front
C34
Front

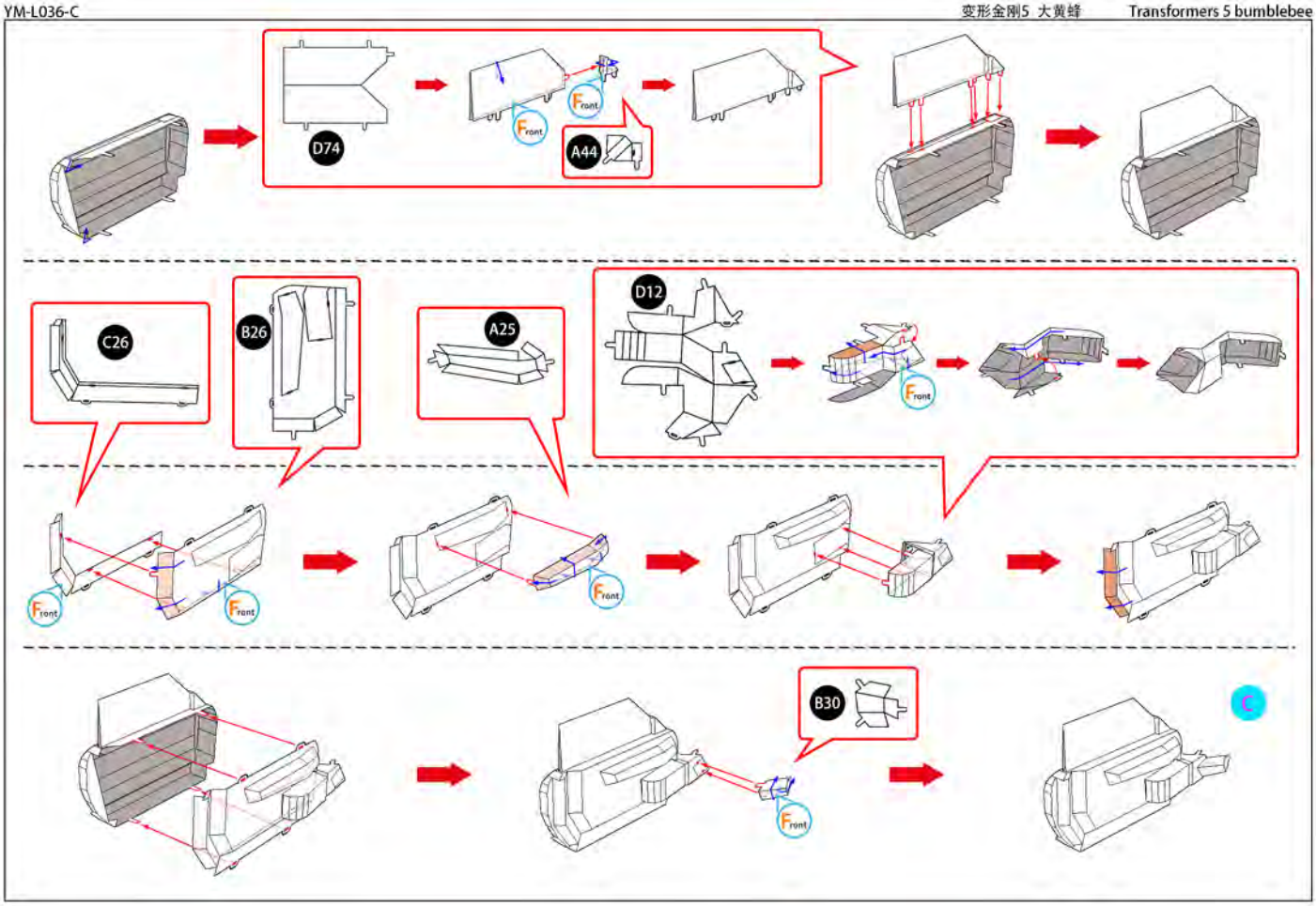
D74
A44
Front
C26
B26
A25
D12
B30
C

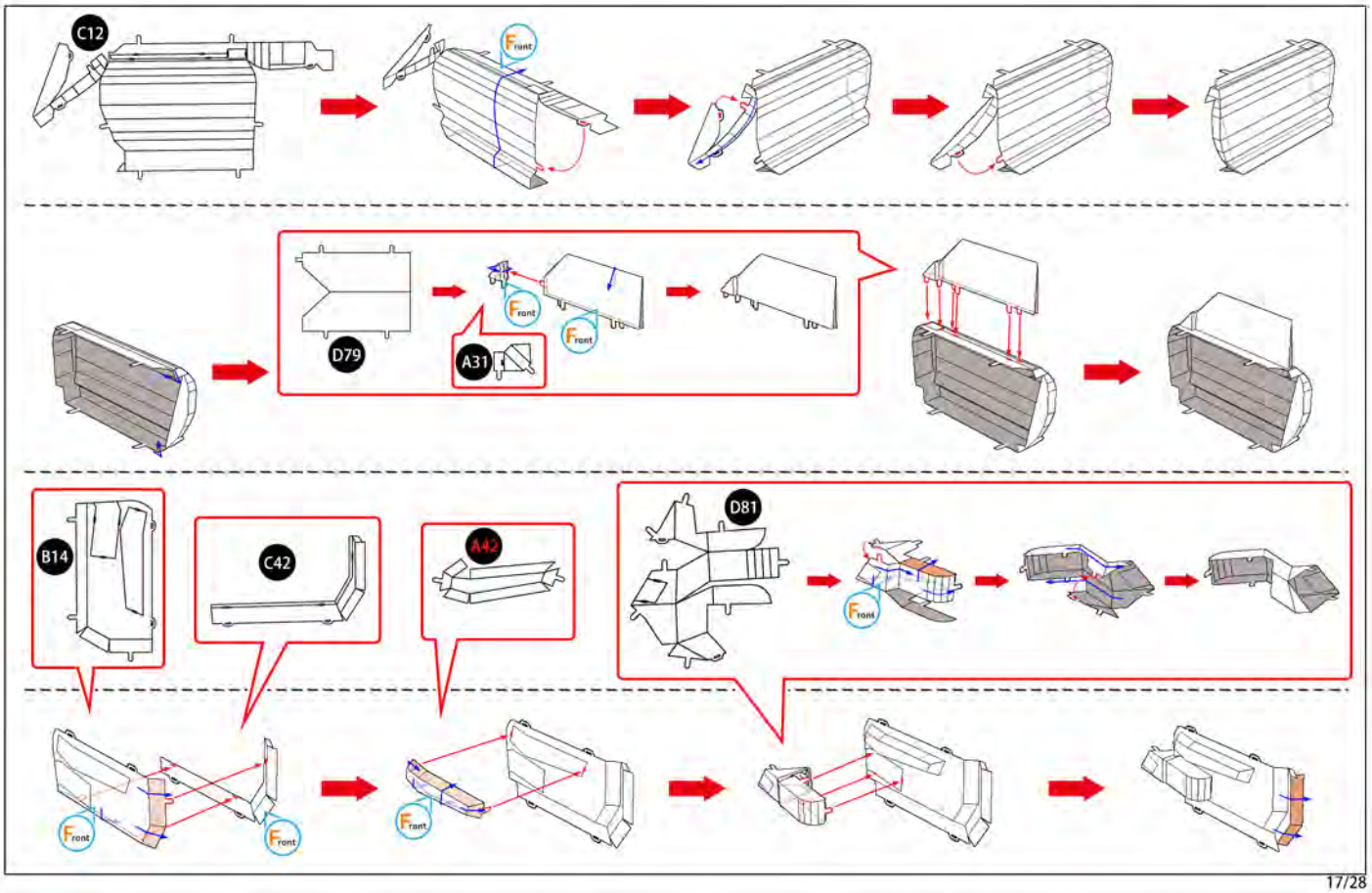
C12
D79
A31
Front
B14
C42
A42
D81

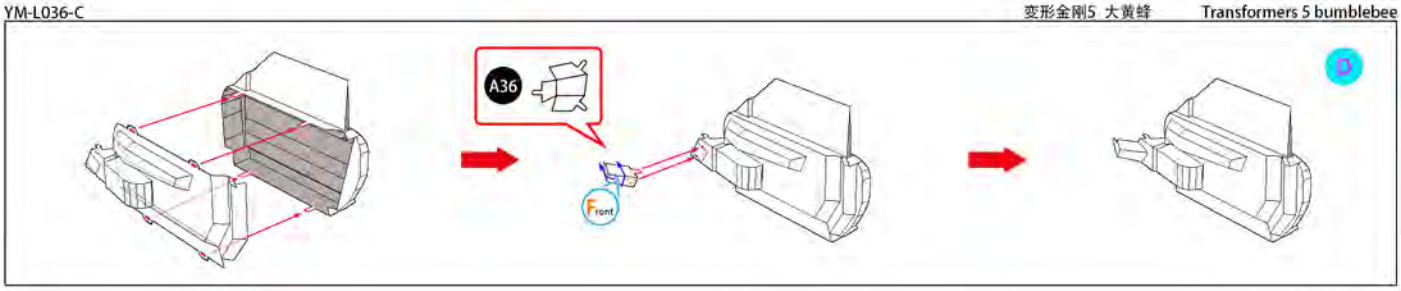
A36
Front
D

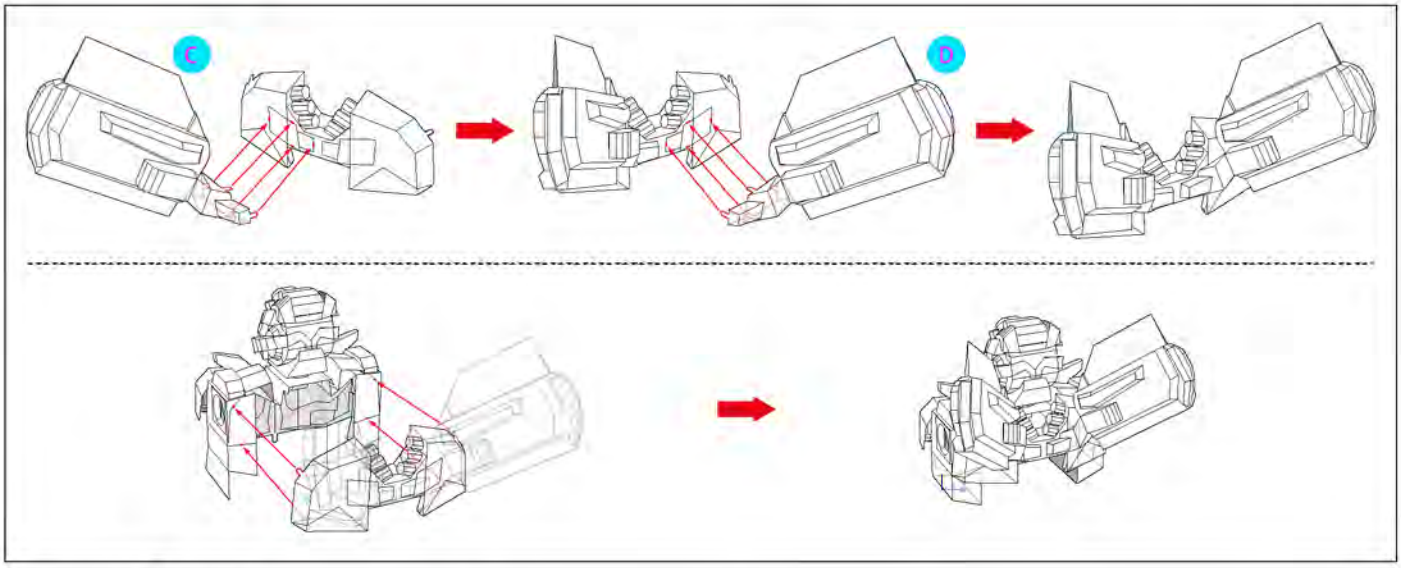
C
D

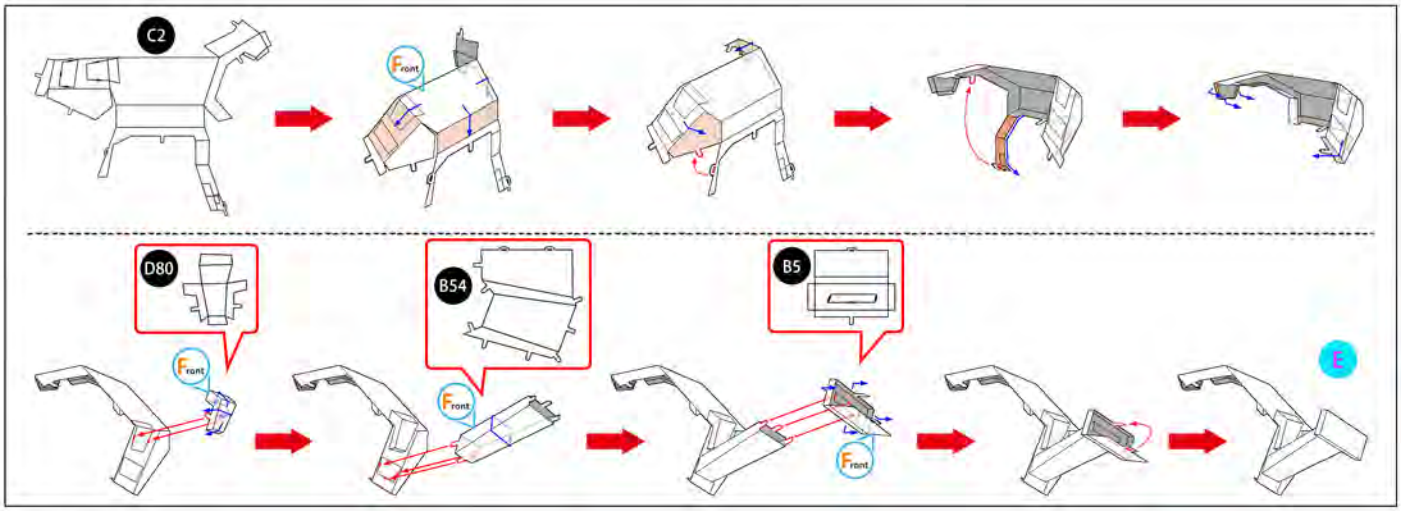
C2
Front
D80
Front
B54
Front
B5
Front
E

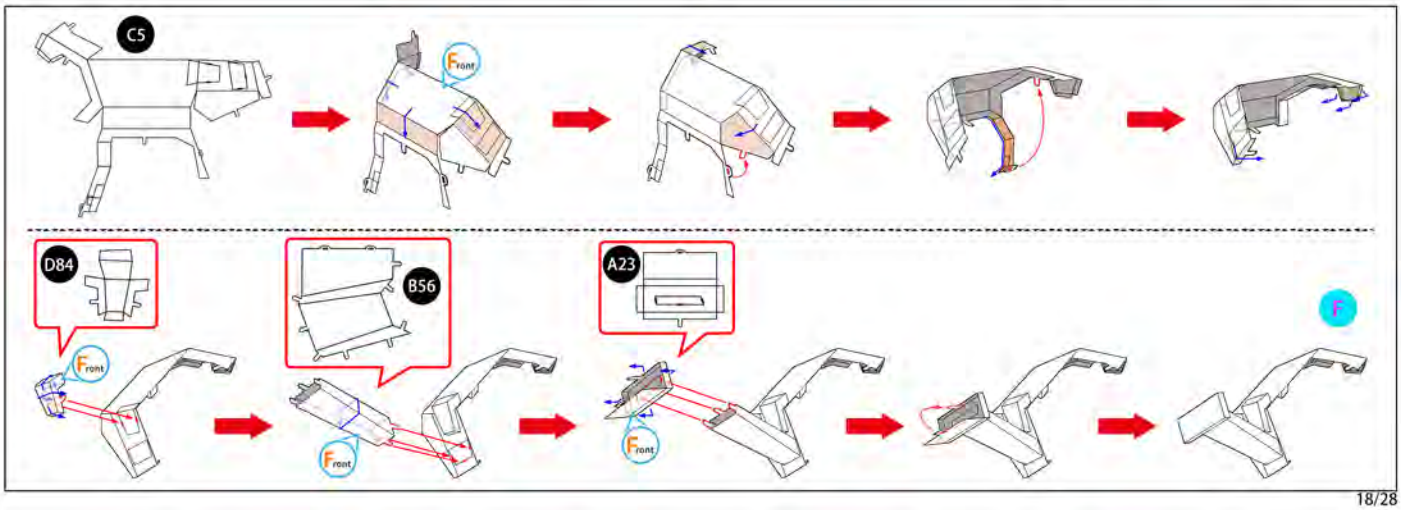
C5
Front
D84
Front
B56
Front
A23
Front
F

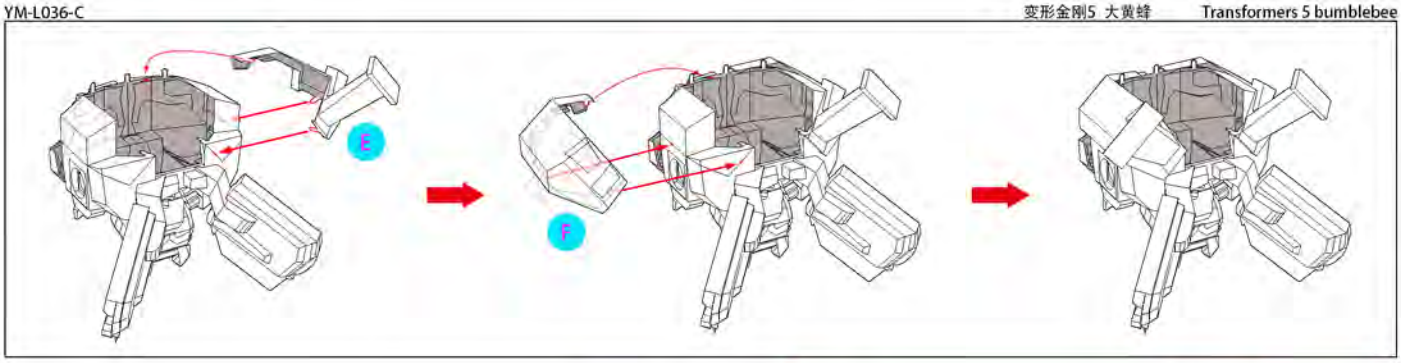
E
F

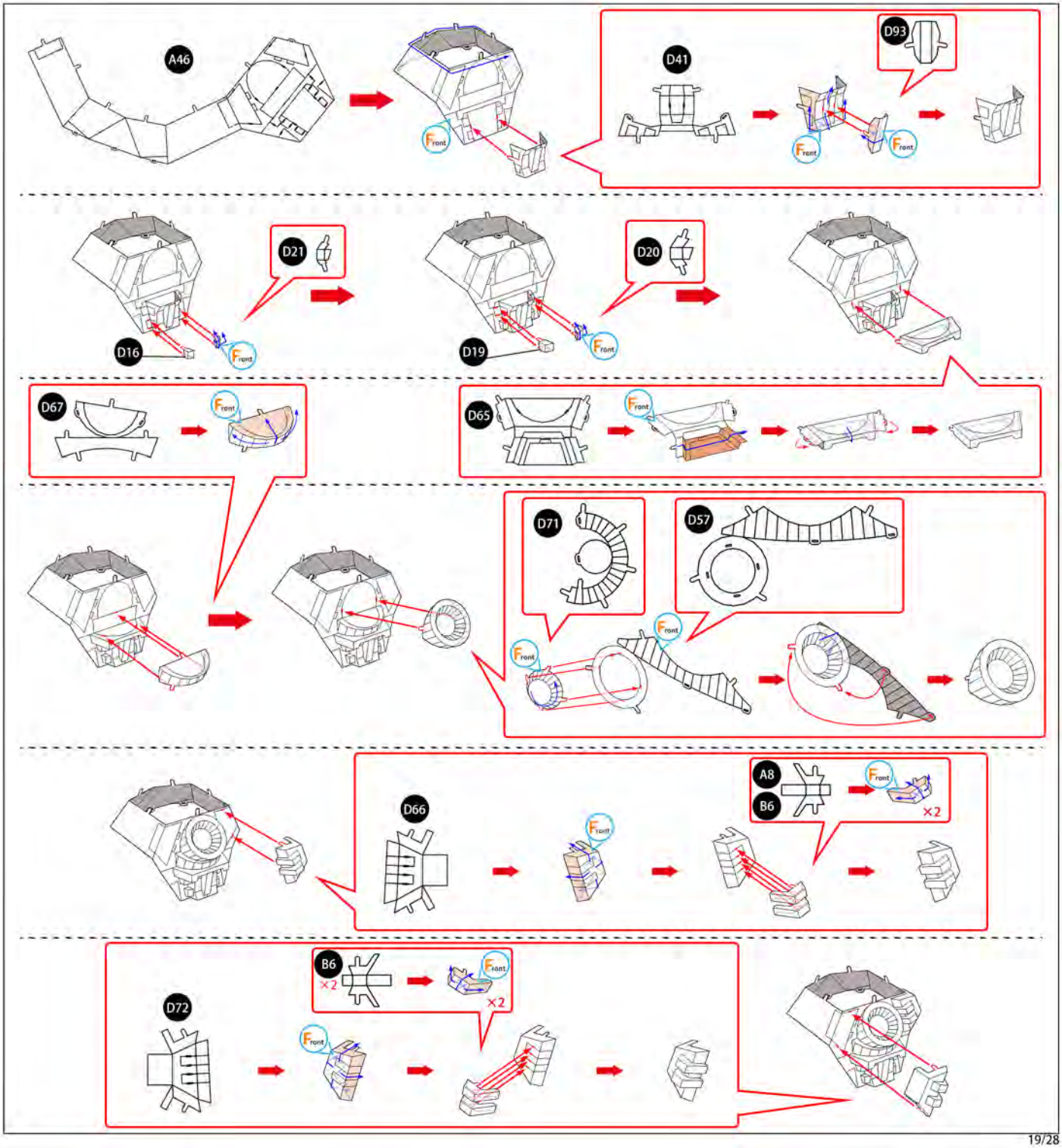
A46
Front
D41
D93
Front
Front
D21
D16
Front
D20
D19
Front
D67
Front
D65
Front
D71
D57
Front
Front
D66
Front
A8
B6
Front
×2
B6
×2
Front
×2
D72
Front

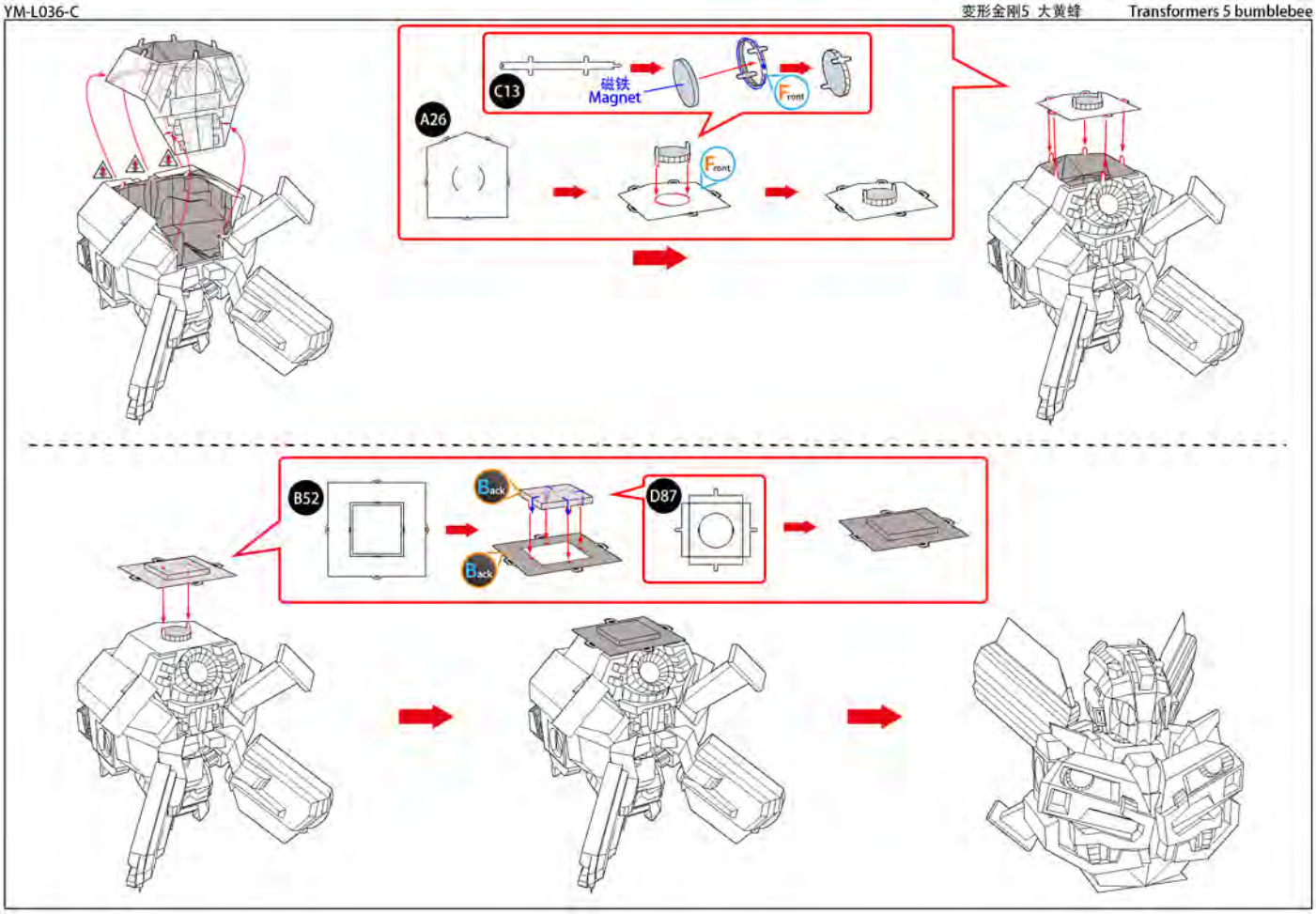
A26
C13
磁铁
Magnet
Front
B52
Back
D87

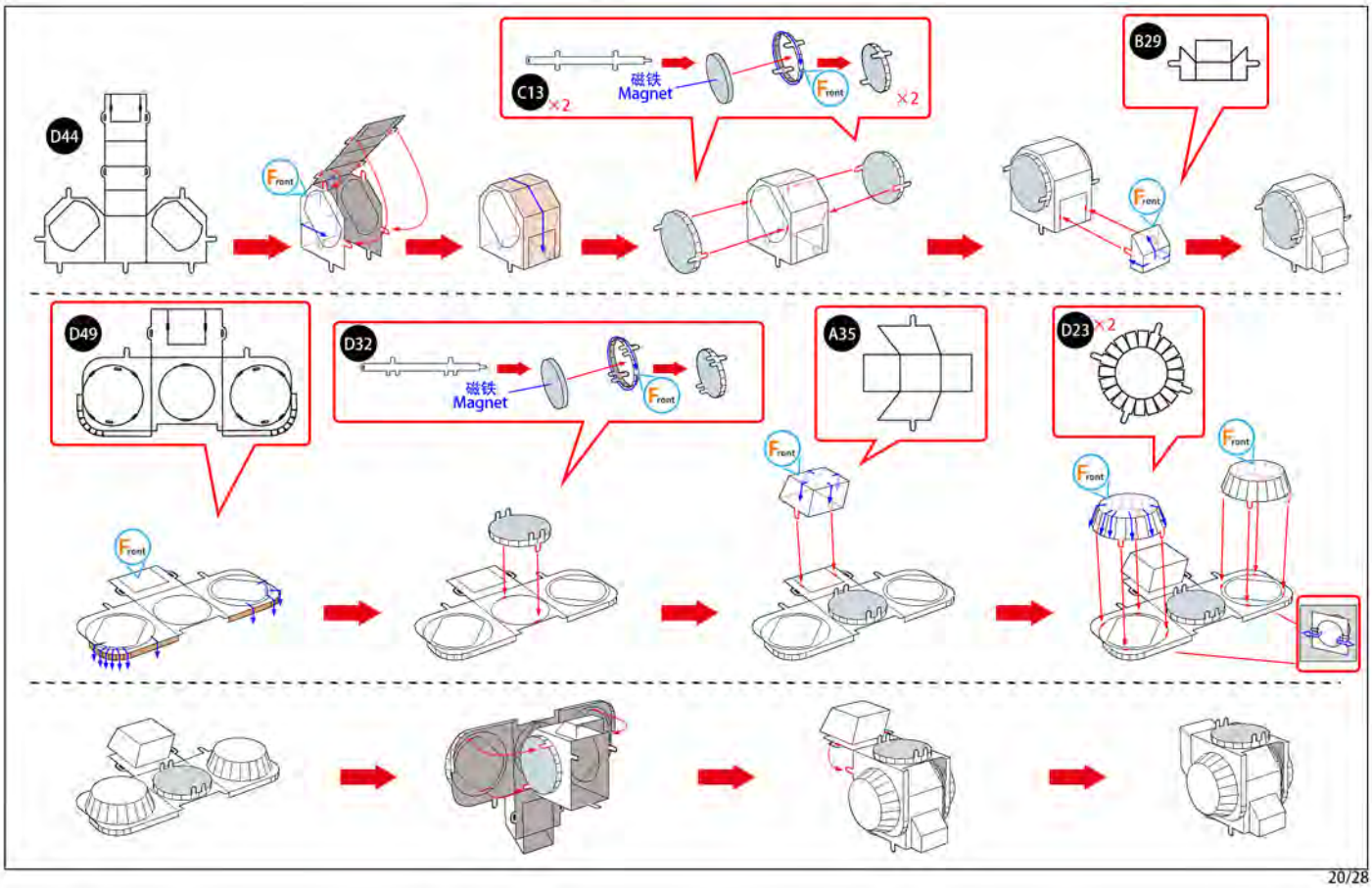
D44
Front
C13
×2
磁铁
Magnet
B29
D49
D32
A35
D23

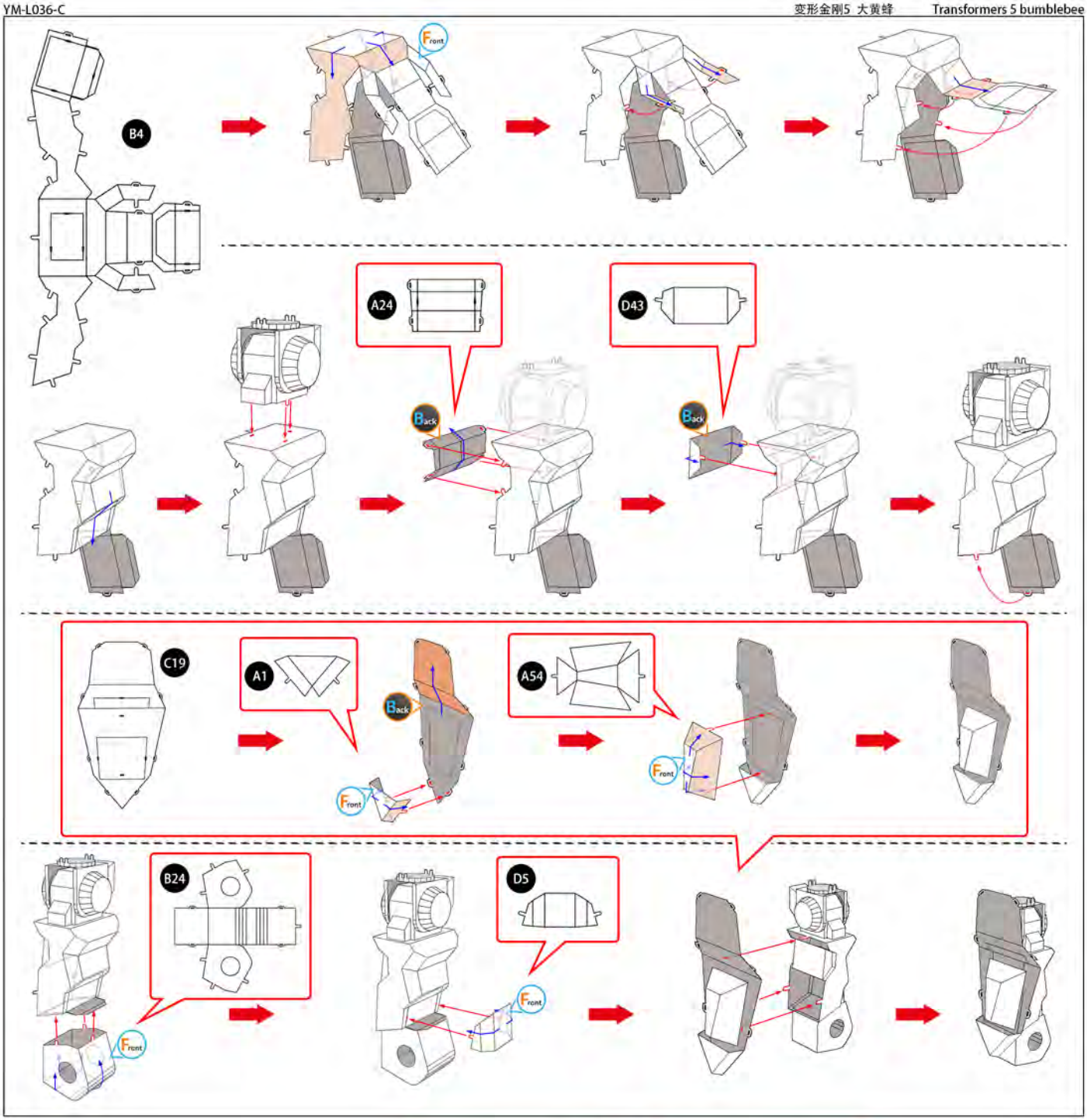
B4
Front
A24
D43
Back
Back
C19
A1
Back
Front
A54
Front
B24
Front
D5
Front

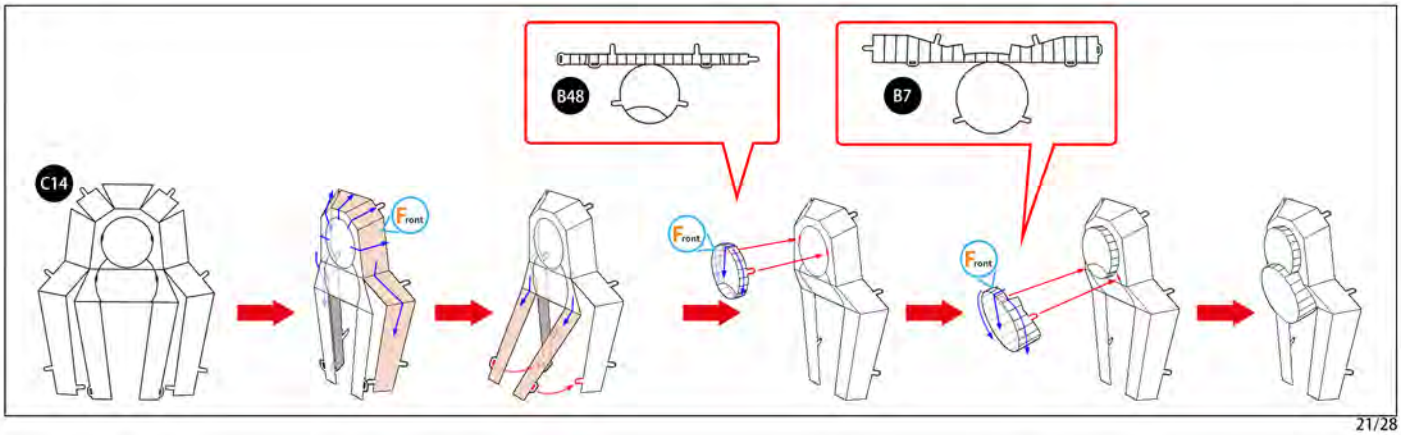
B48
B7
C14
Front
Front
Front

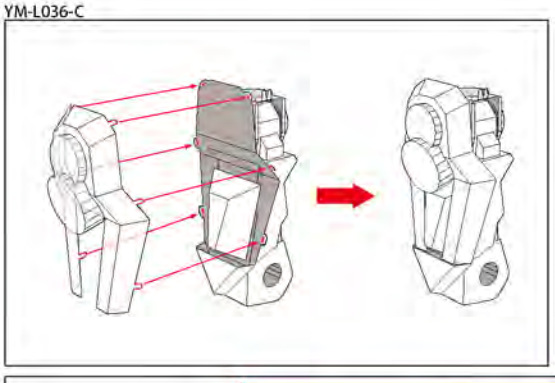

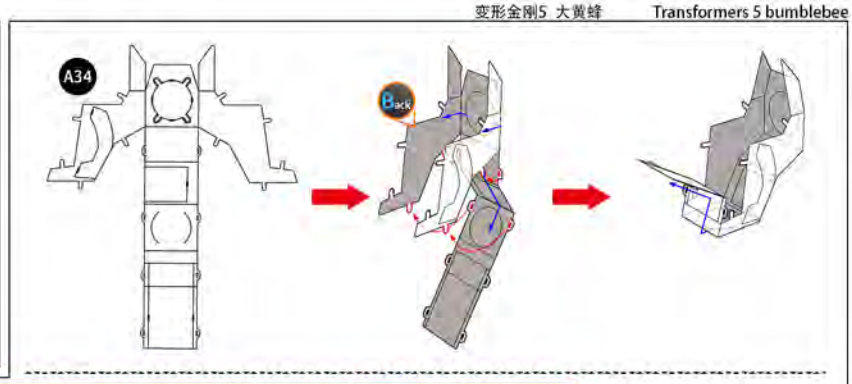
A34
Back

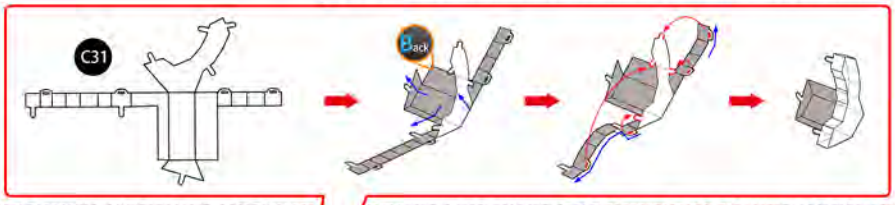
C31
Back

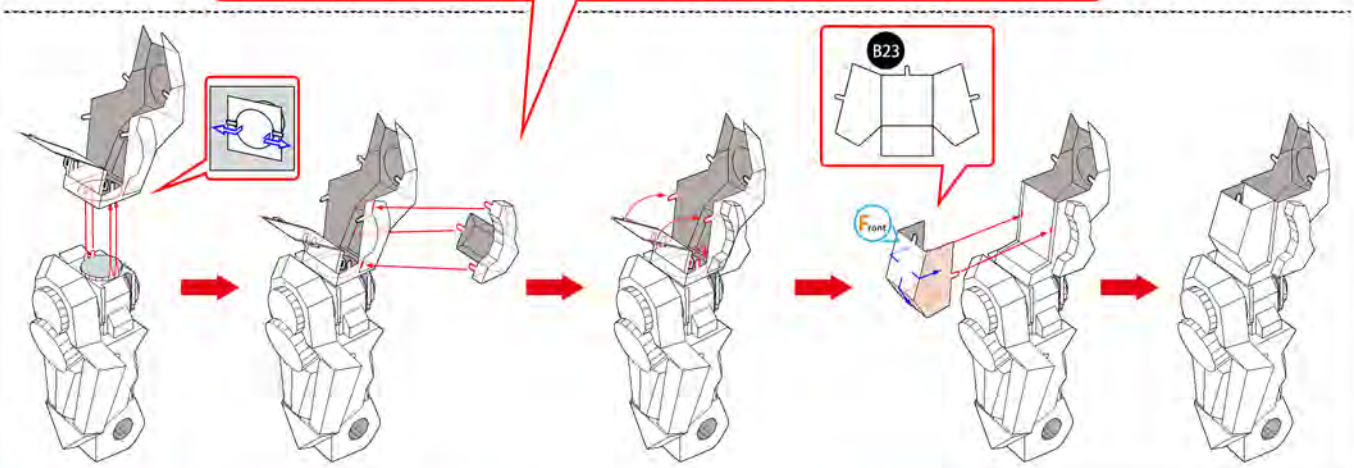
B23
Front

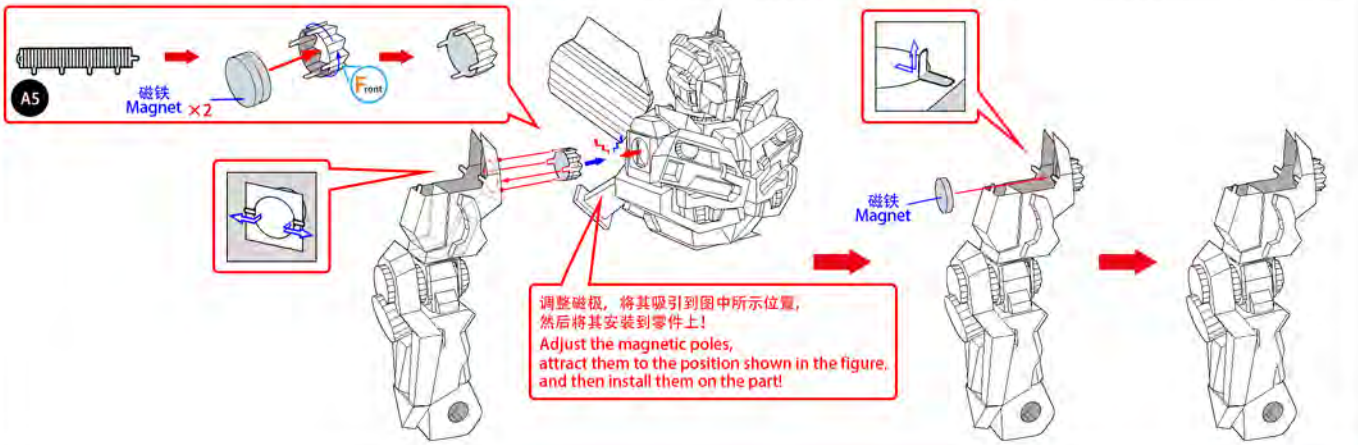
A5
磁铁
Magnet ×2
Front
磁铁
Magnet
调整磁极，将其吸引到图中所示位置，
然后将其安装到零件上！
Adjust the magnetic poles,
attract them to the position shown in the figure,
and then install them on the part!

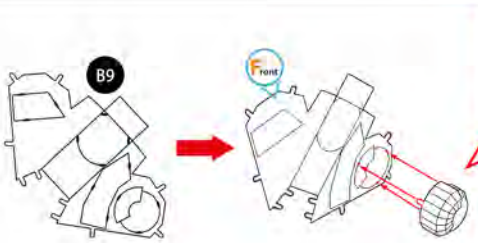
B9
Front

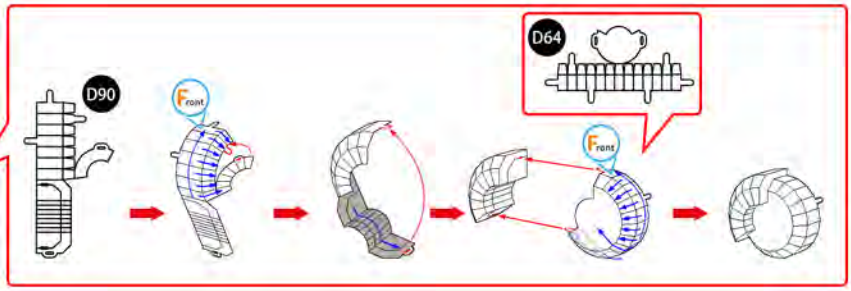
D90
Front
D64
Front

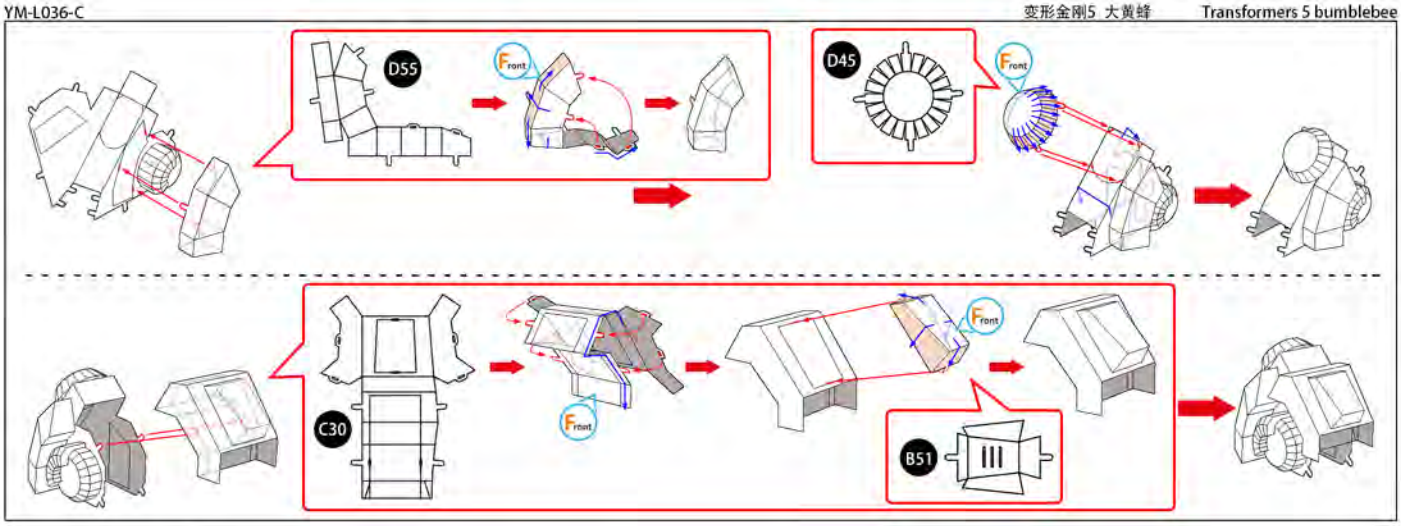
D55
Front
D45
Front
C30
Front
Front
B51

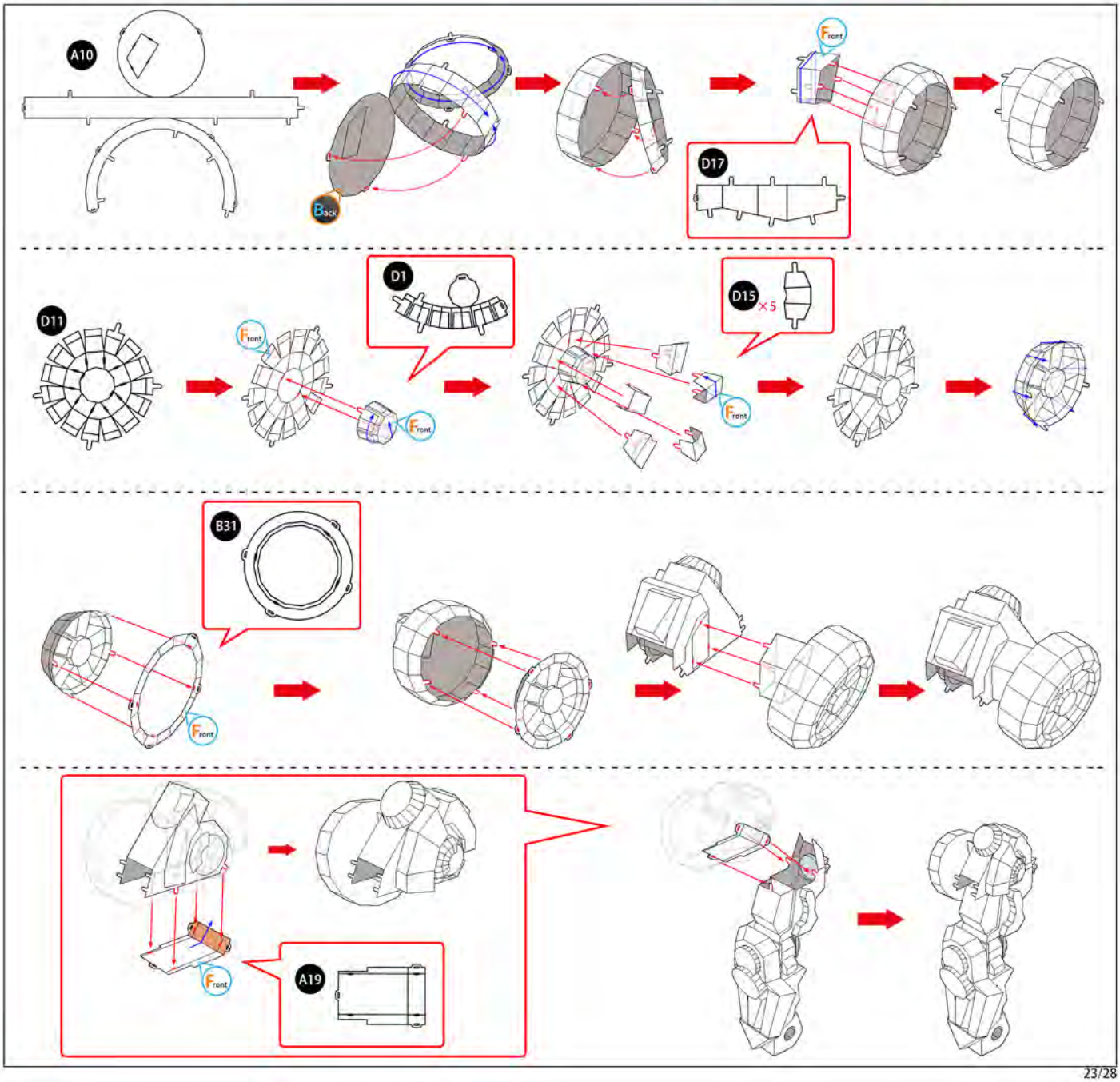
A10
Back
Front
D17
D11
Front
D1
Front
D15
×5
Front
B31
Front
Front
A19

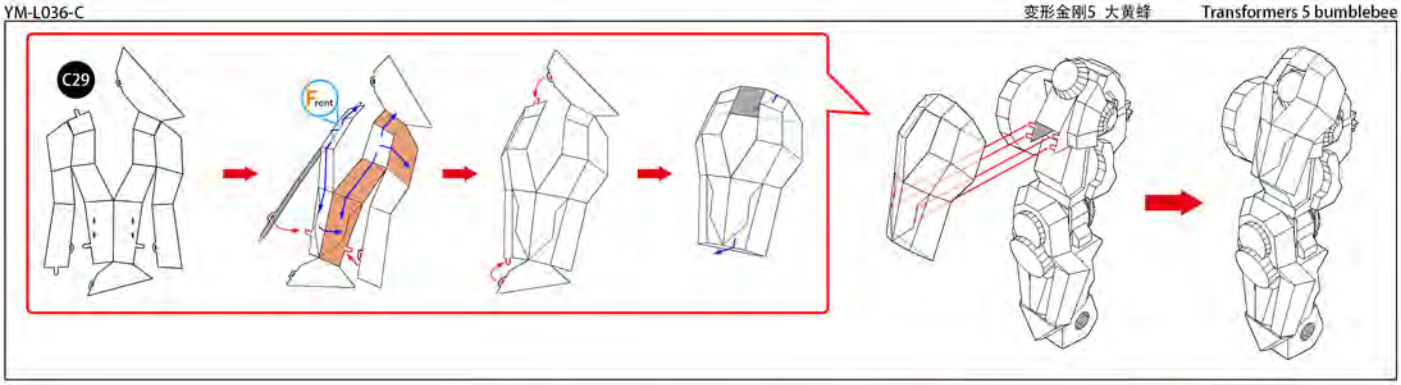
C29
Front

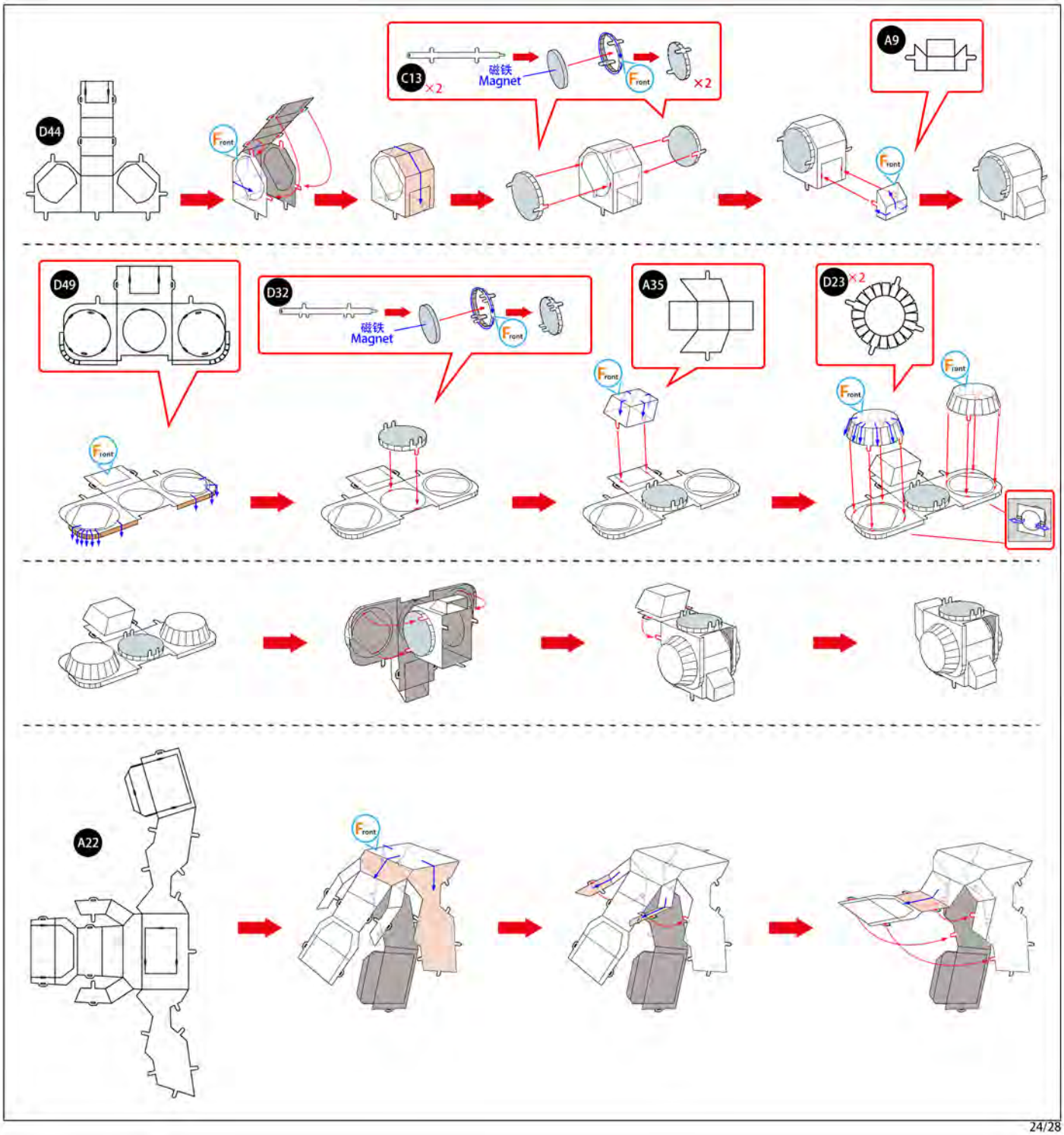
D44
Front
C13
×2
磁铁
Magnet
Front
×2
A9
Front
D49
Front
D32
磁铁
Magnet
Front
A35
Front
D23
×2
Front
Front
A22
Front

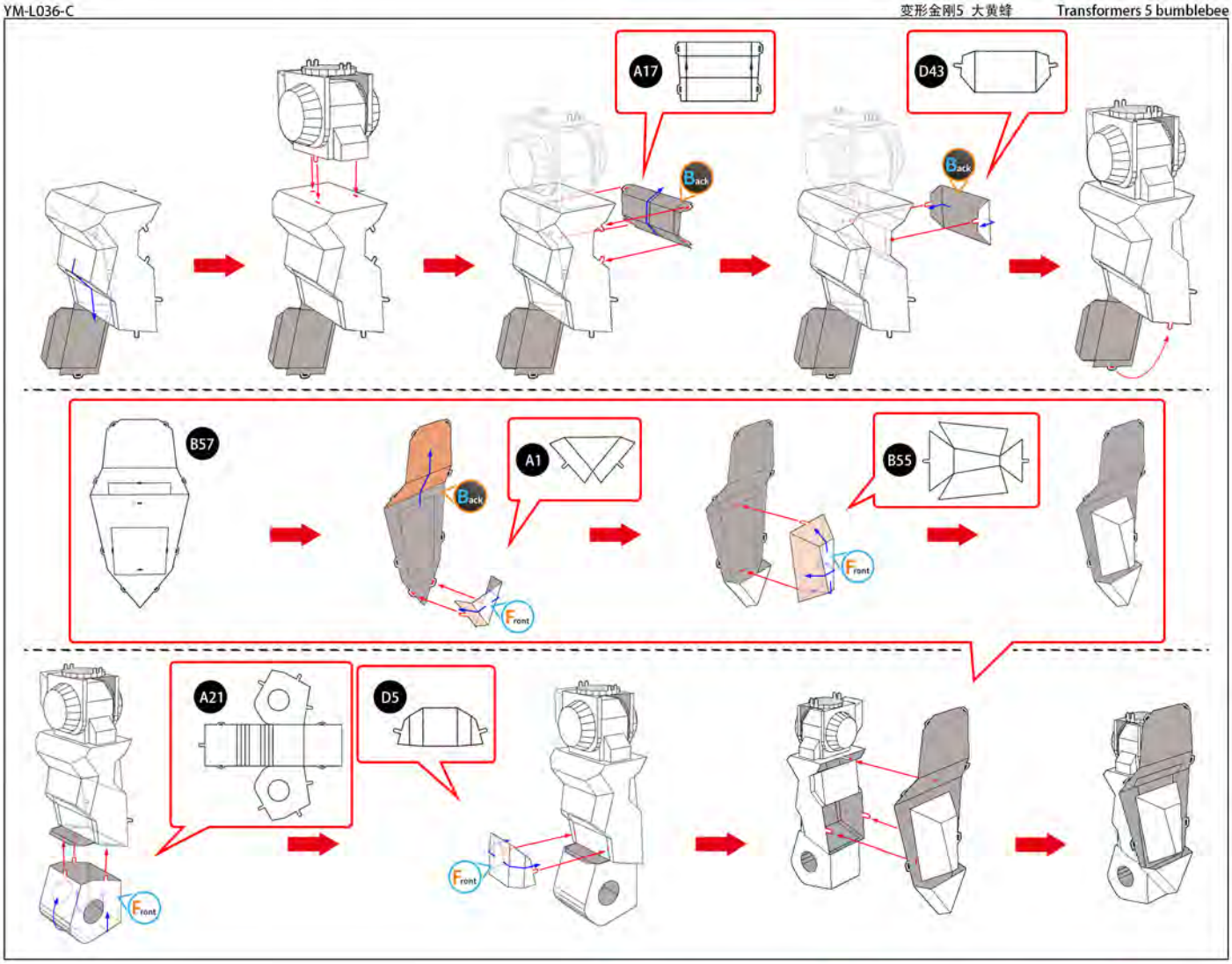
A17
Back
D43
Back
B57
Back
A1
Front
B55
Front
A21
D5
Front
Front

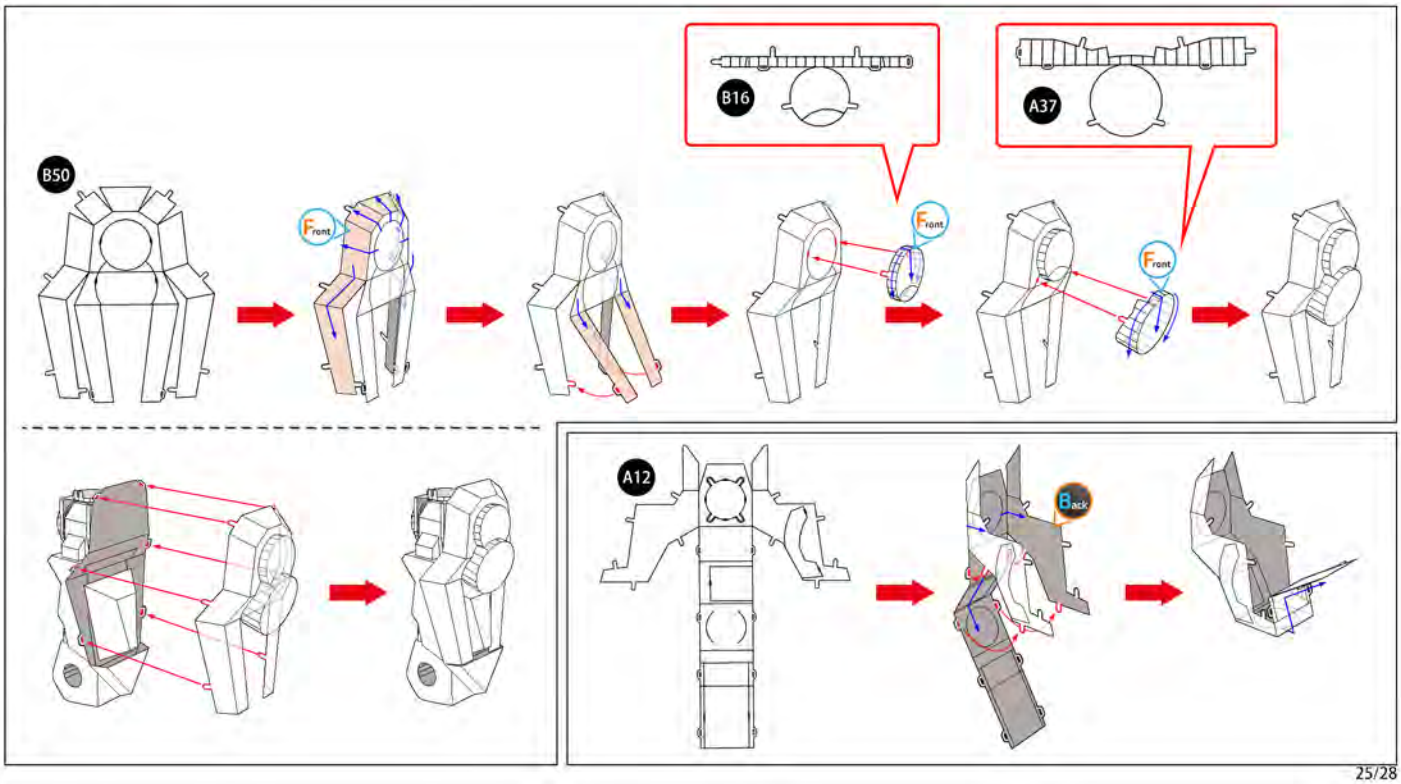
B16
A37
B50
Front
Front
Front
A12
Back

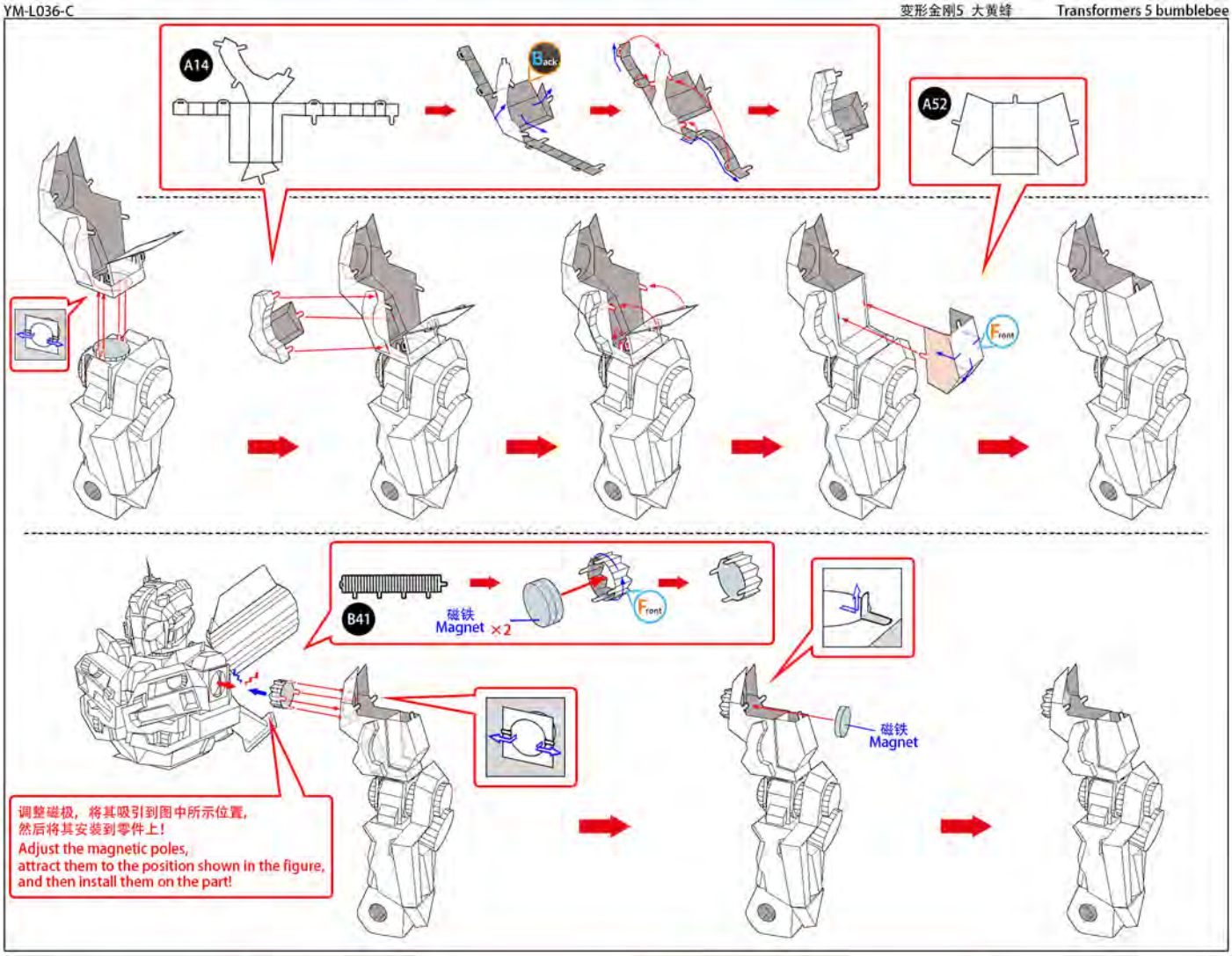
A14
Back
A52
Front
B41
磁铁
Magnet ×2
Front
磁铁
Magnet
调整磁极，将其吸引到图中所示位置，
然后将其安装到零件上！
Adjust the magnetic poles,
attract them to the position shown in the figure,
and then install them on the part!

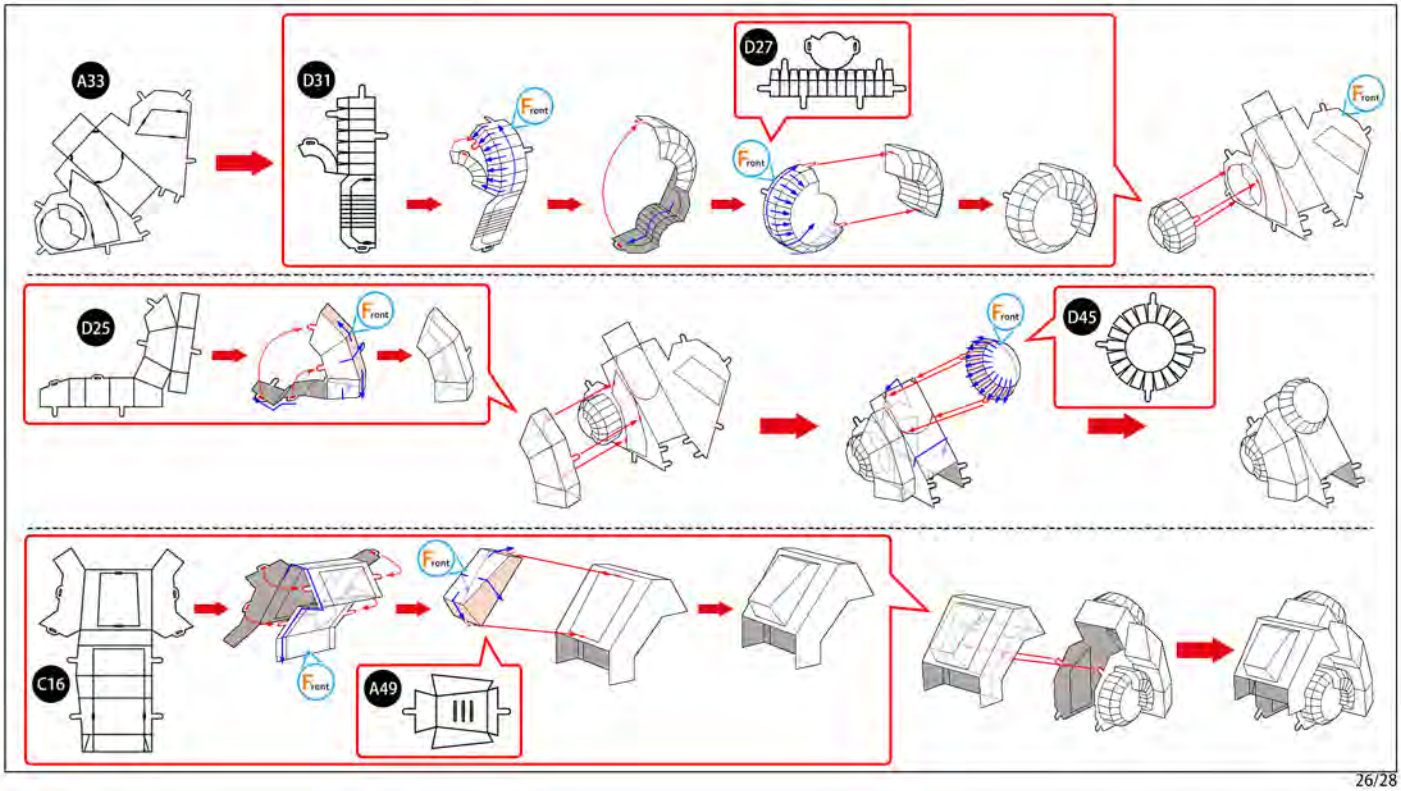
A33
D31
Front
D27
Front
Front
D25
Front
Front
D45
C16
Front
Front
A49

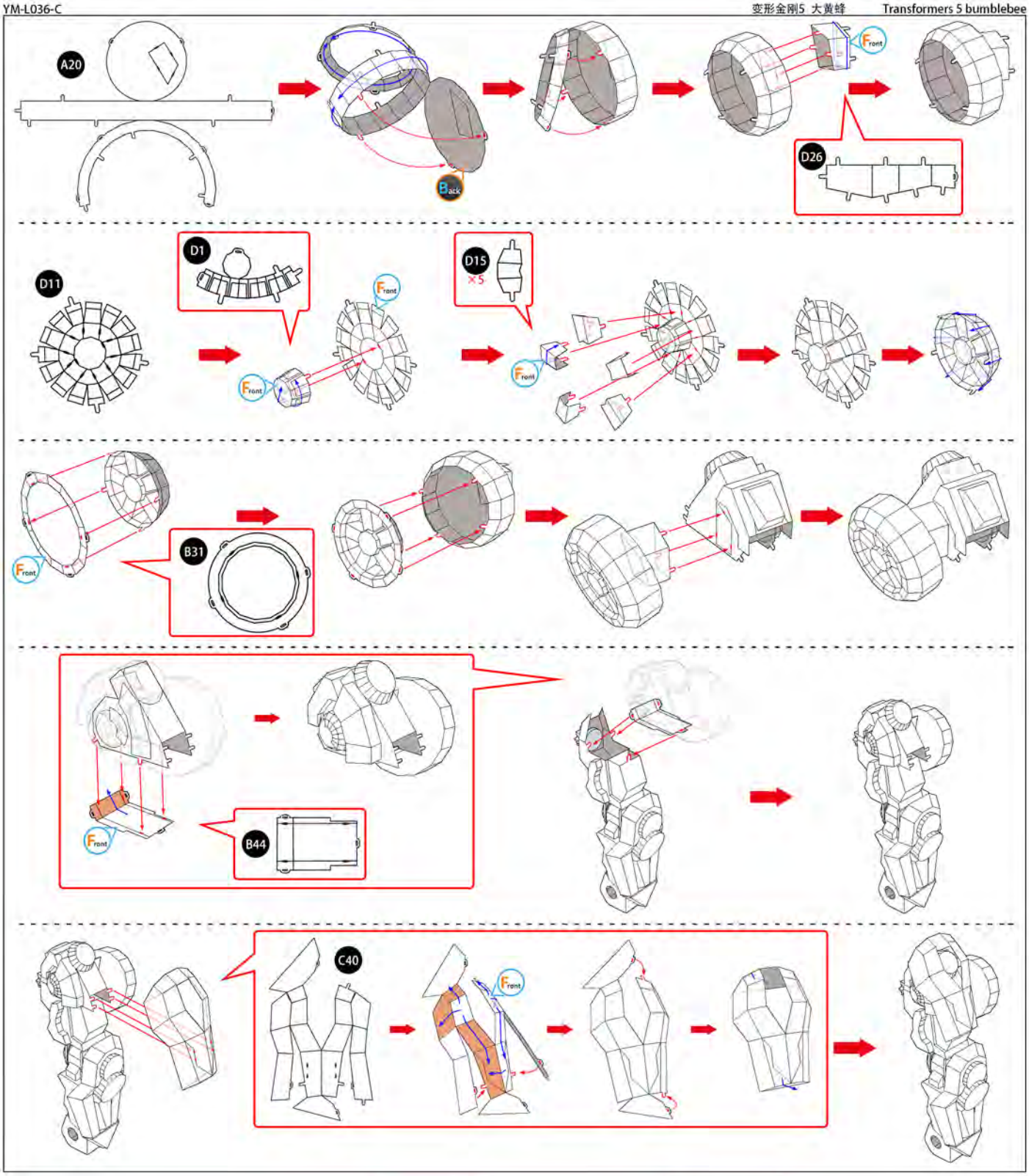
A20
Back
Front
D26
D11
D1
Front
Front
D15
×5
Front
Front
B31
Front
Front
B44
C40
Front
D6
Front
D91
Front
A51
C28
Front
Back
D85
Front

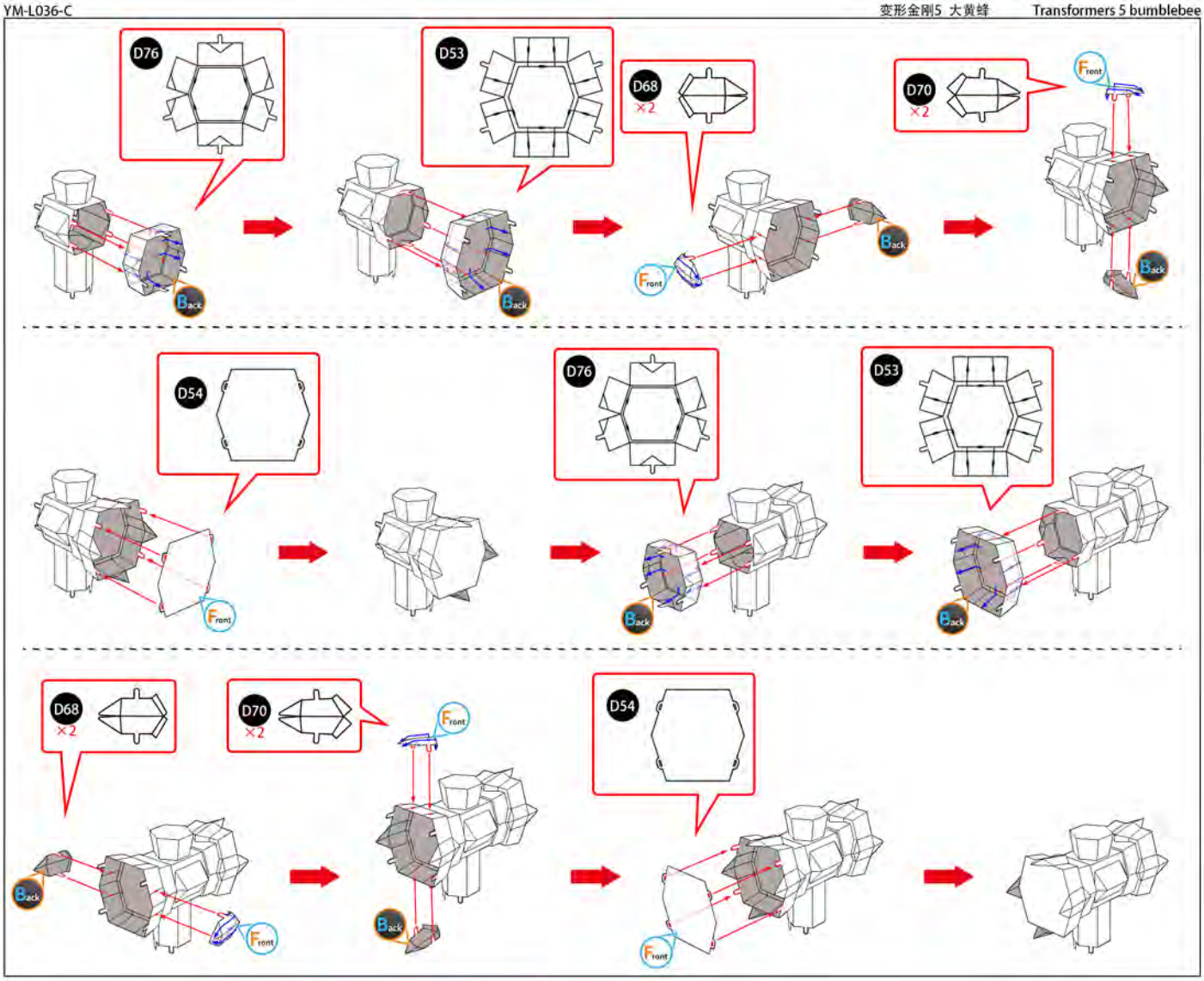
D76
D53
D68
×2
D70
×2
Front
Back
D54
D76
D53
D68
×2
D70
×2
D54

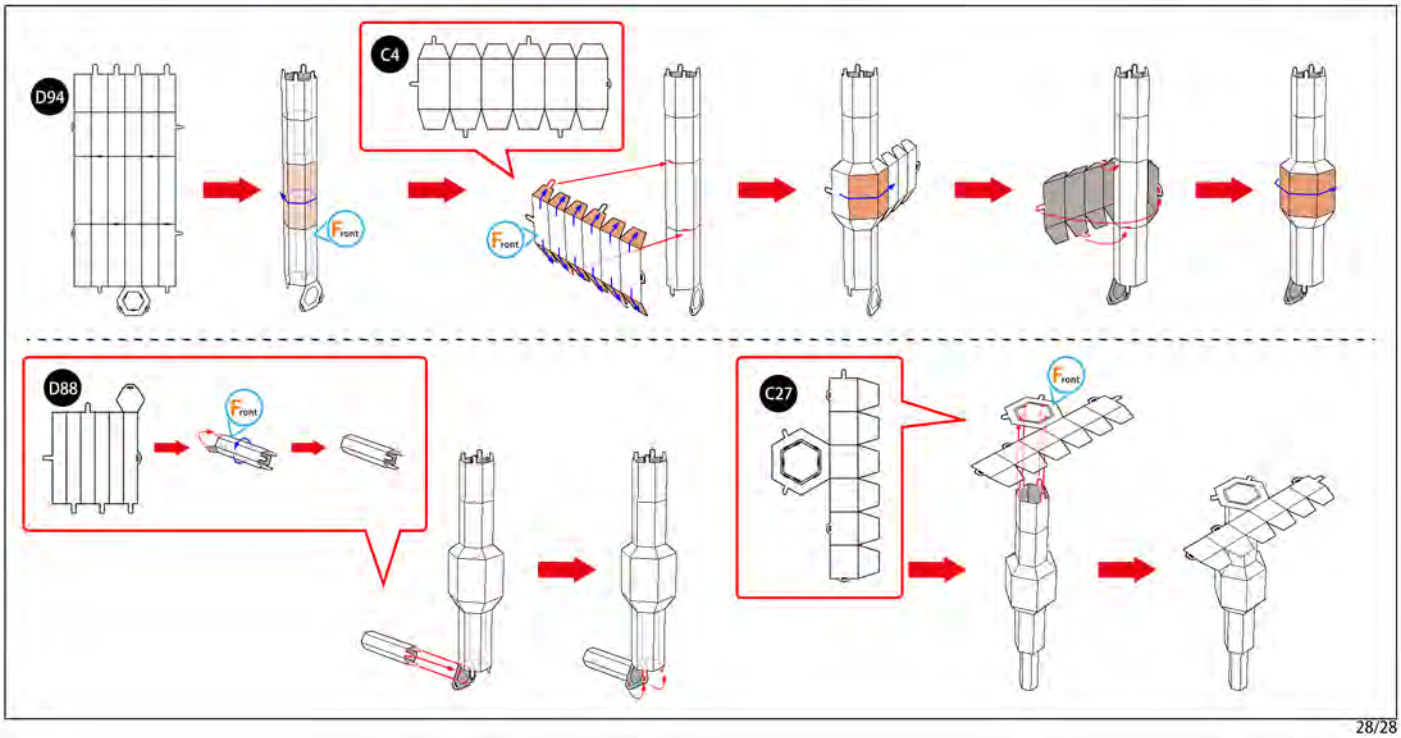
D94
C4
Front
D88
C27

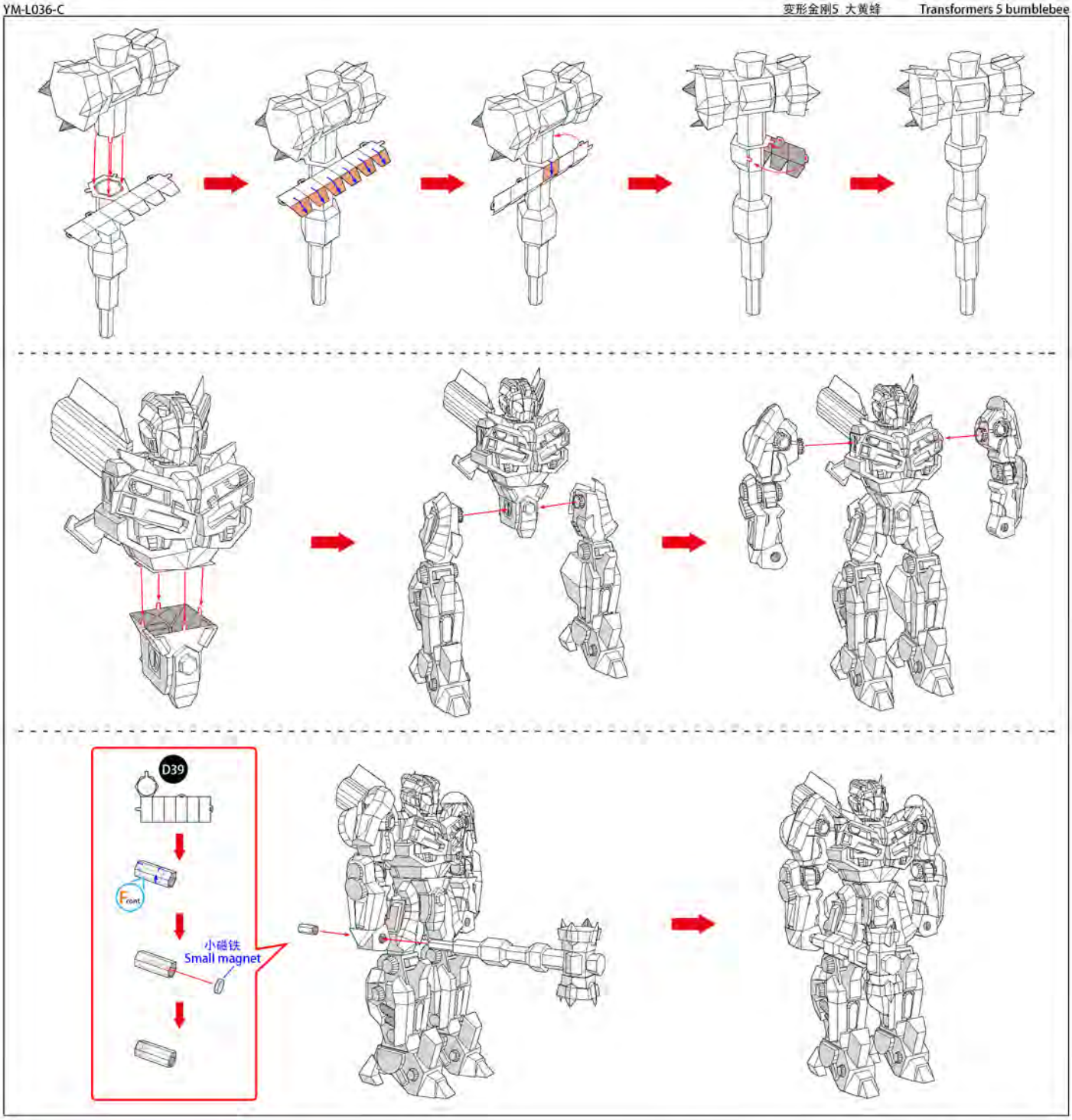


艺模
上海艺模电子科技有限公司
SHANGHAI ART MODEL ELECTRONIC SCIENCE AND TECHNOLOGY CO.,LTD
电话/Tel: 021-58942999
网址/Website: WWW.MUMODEL.COM
产地/Address: 上海浦东新区川周公路5917弄1号

Design by: 国懋Tewi Kanade Remember 昔日永恒

扫码加入微信公众号
解锁更多模型
Scan the two-dimensional code
Join us and unlock more models

Licensed By:

HASBRO and its logo and TRANSFORMERS,the logo and all related characters are trademarks of Hasbro and used with permission.
© 2018 Hasbro.All Rights Reserved.