MU 艺模
TRANSFORMERS
THE LAST KNIGHT
OPTIMUS PRIME
擎天柱
YM-L040-C

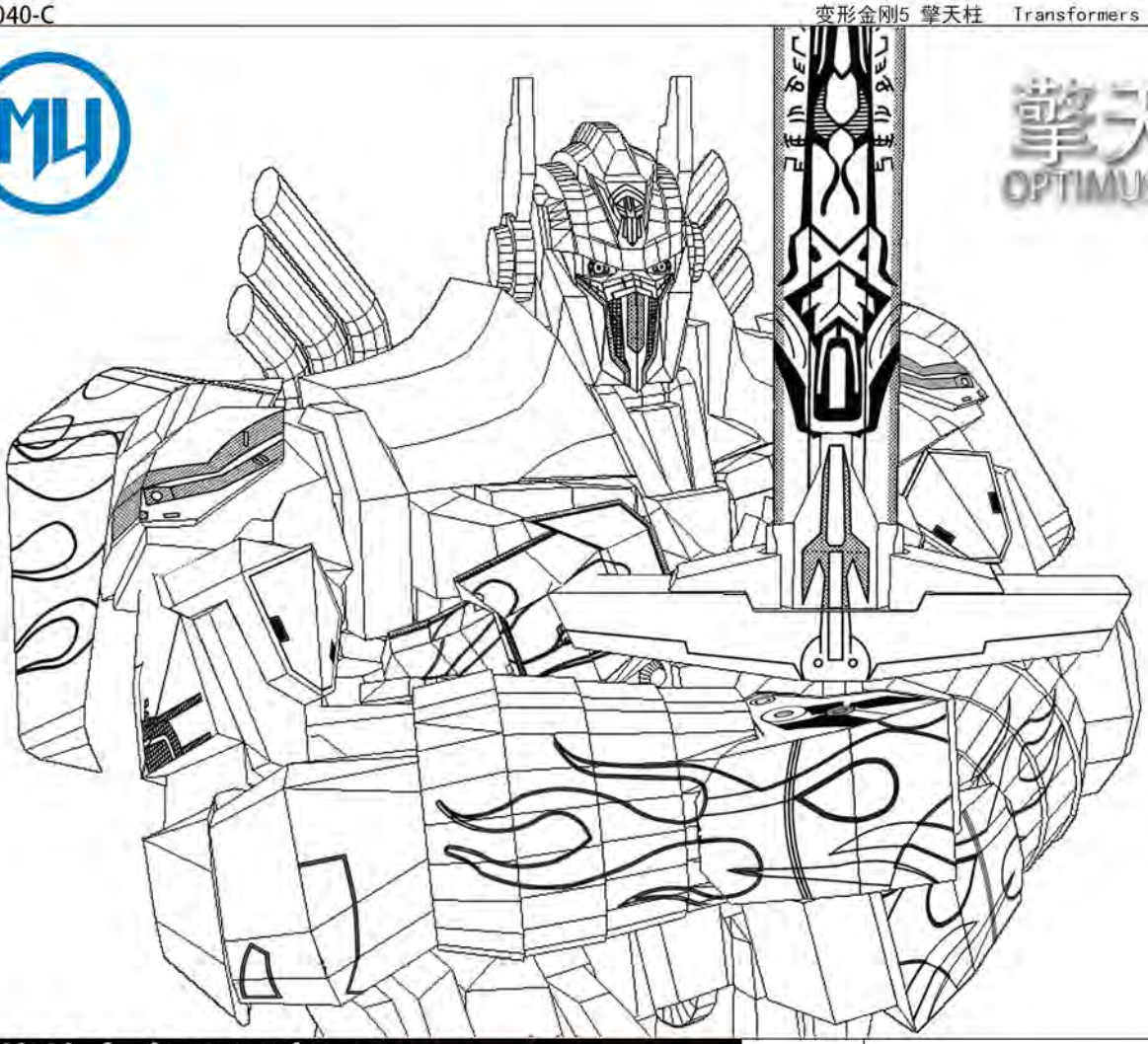

组装基本步骤示意图
ASSEMBLE THE BASIC STEP DIAGRAM

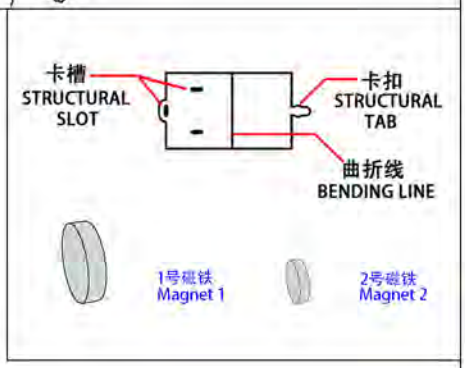

固定方式一:
将卡扣穿过对应固定孔,
按对应角度曲折（图一）
Fitting method 1:
put the tab in the slot,
bend properly(p1)

固定方式二:
将卡扣穿过对应固定孔,
用钳子类工具垂直扭曲固定卡扣（图二）
Fitting method 2:
put the tab in the slot,
bend the tab vertically
with plier(p2).

折弯面
Bending surface

非纹理面
Non textured surface

安装前可适当改变卡扣角度
Change the Angle of the buckle properly before installation

注意拼装前带手指套
Take finger cots before assembly

板件上附带编号
Serial number in the sheet

在安装磁铁前，注意磁极！
Before installing the magnet, pay attention to the magnetic pole!

金属零件编号 METAL PART NUMBER

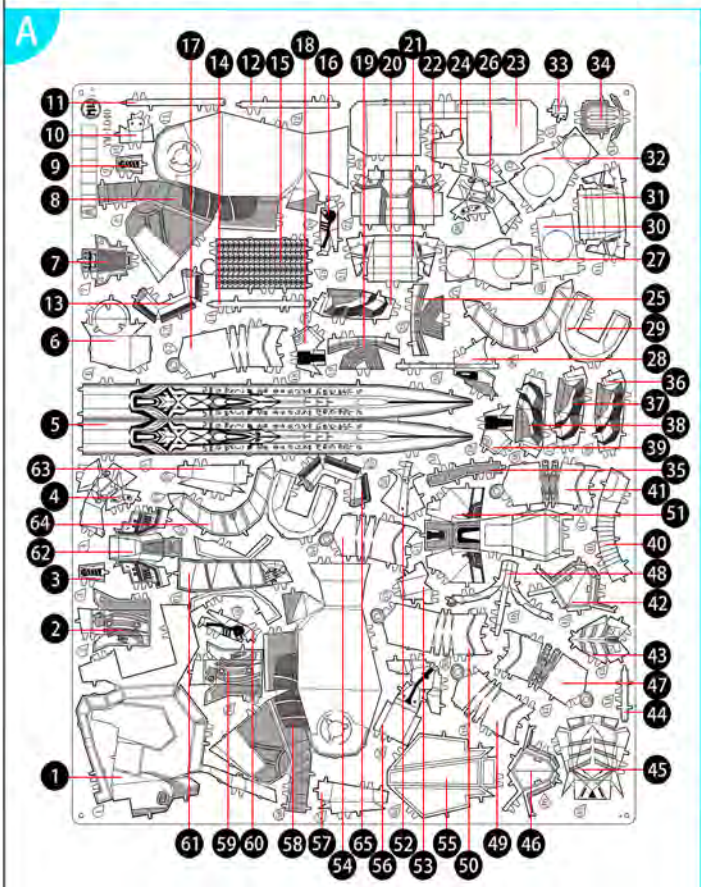

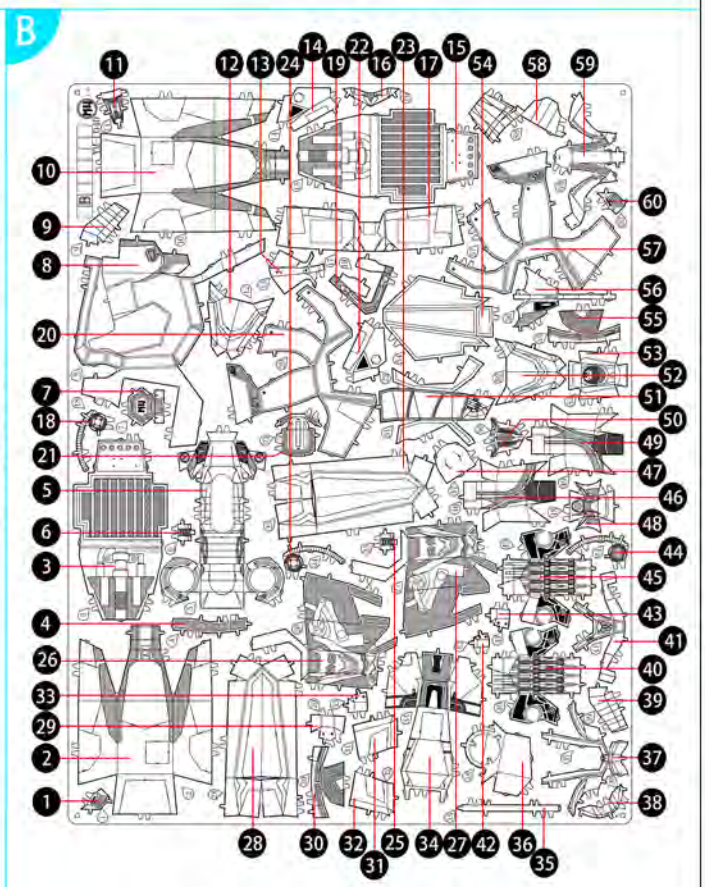

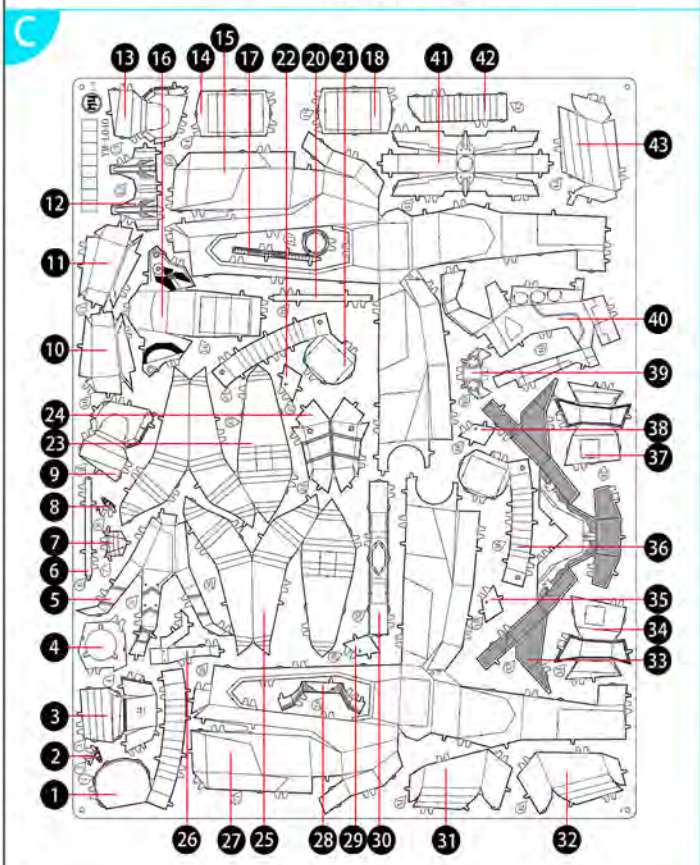

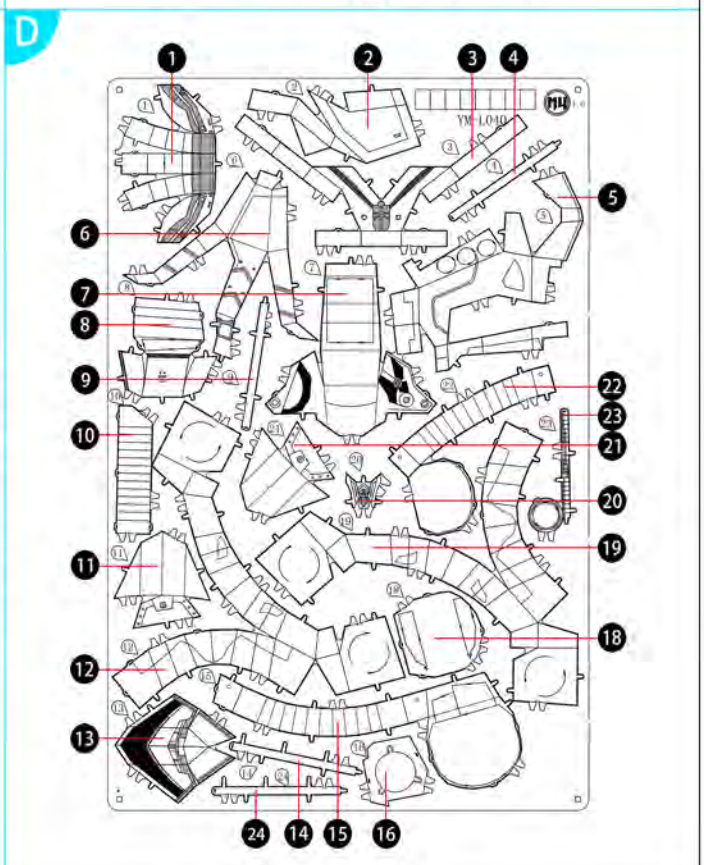

金属零件编号 METAL PART NUMBER

E

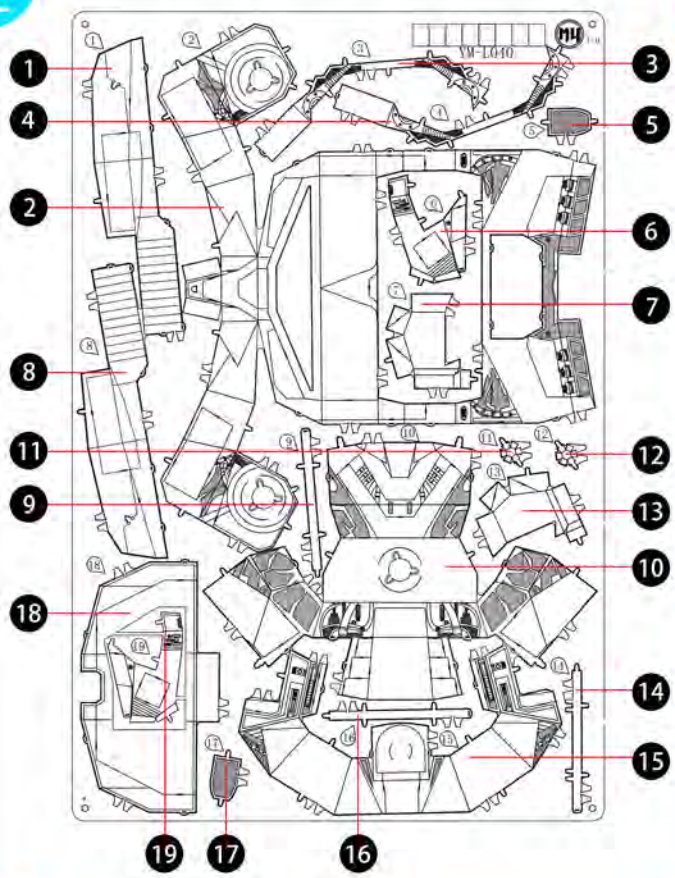

F

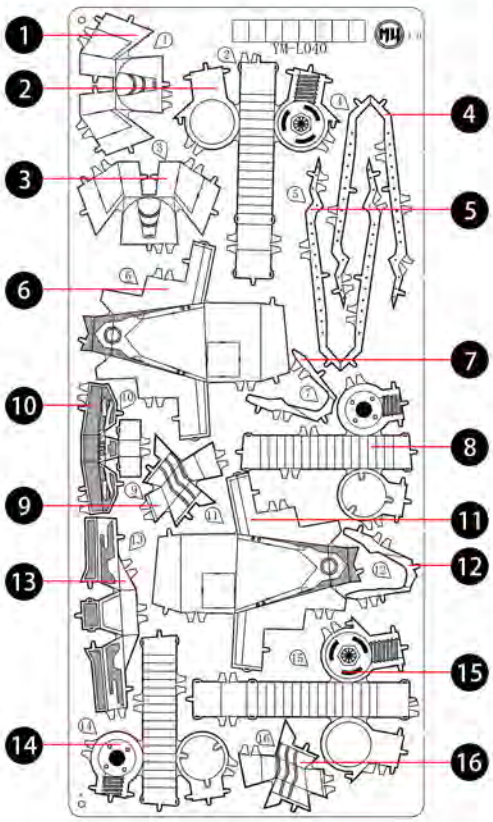

G

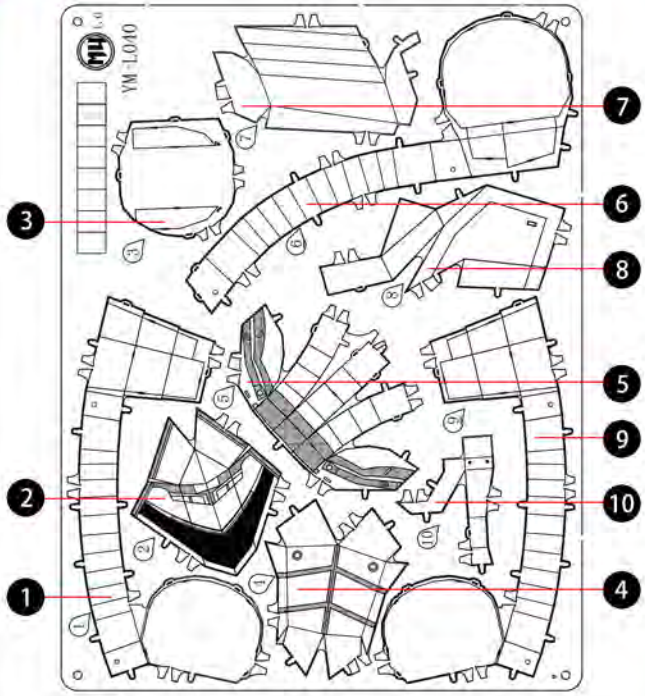

H

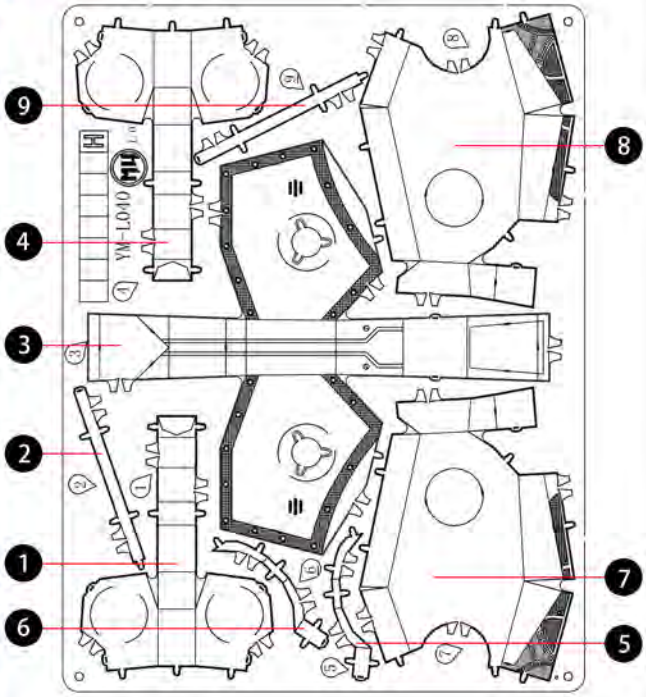

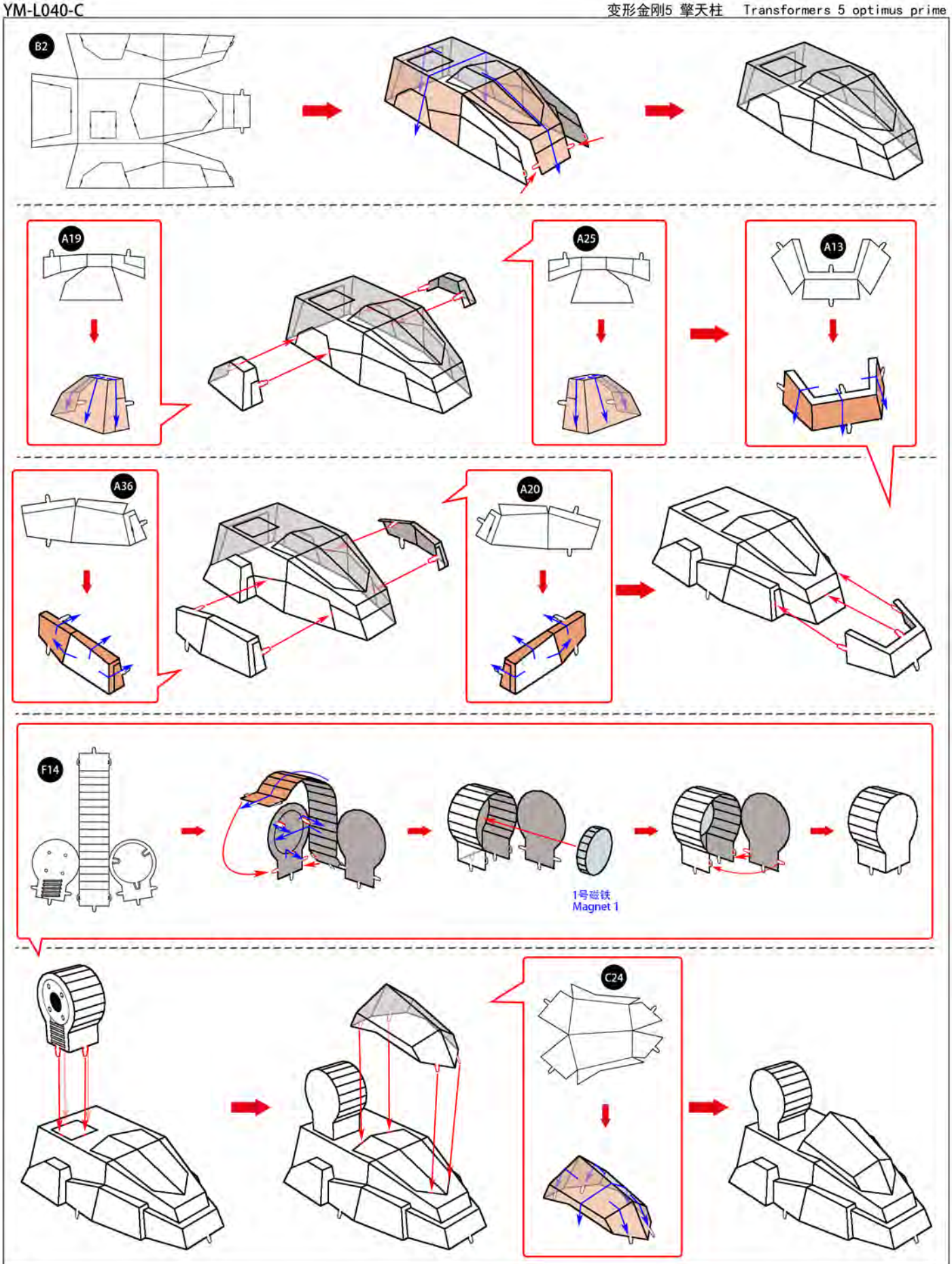
B2
A19
A25
A13
A36
A20
F14
1号磁铁
Magnet 1
C24

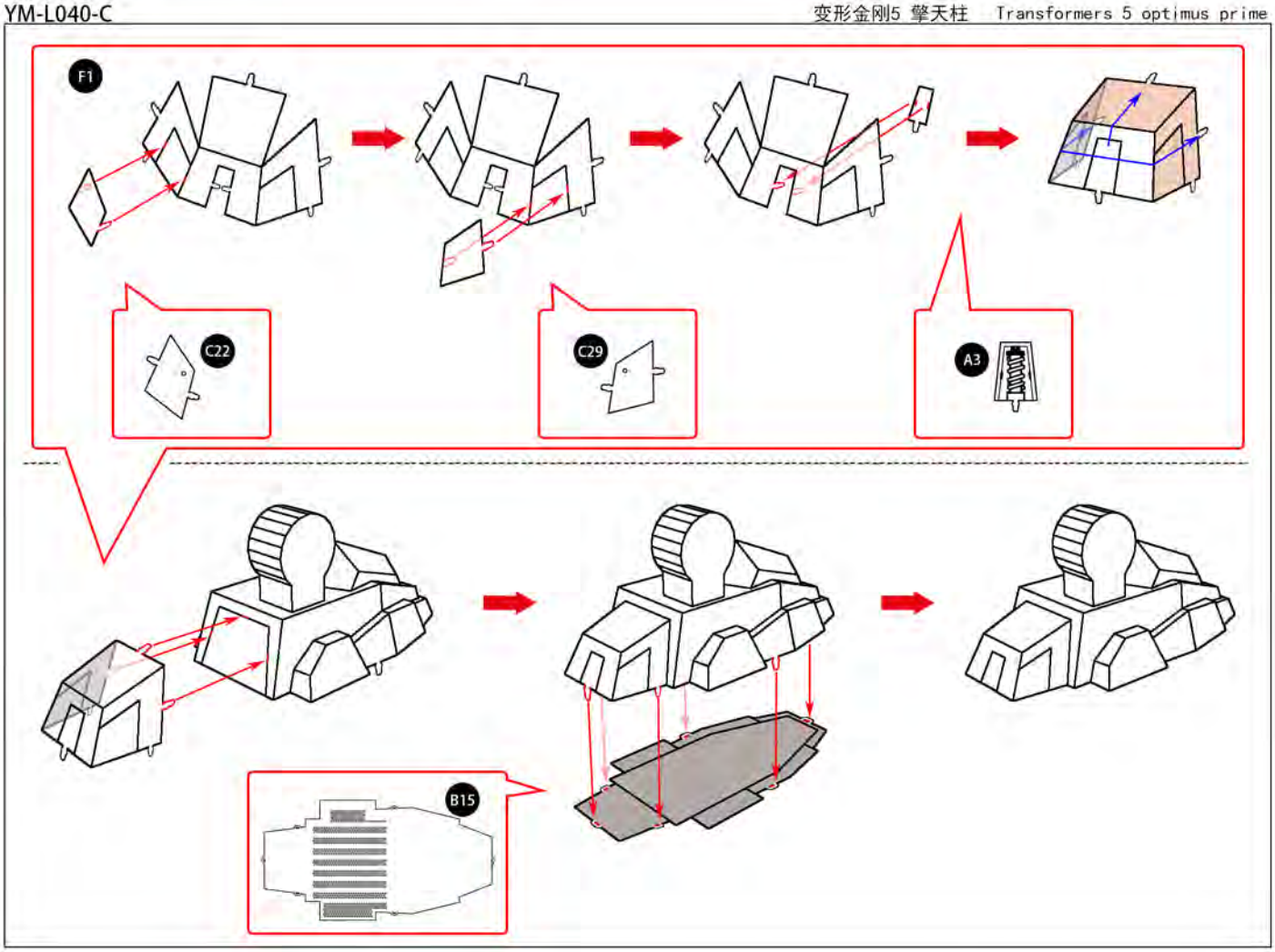
F1
C22
C29
A3
B15

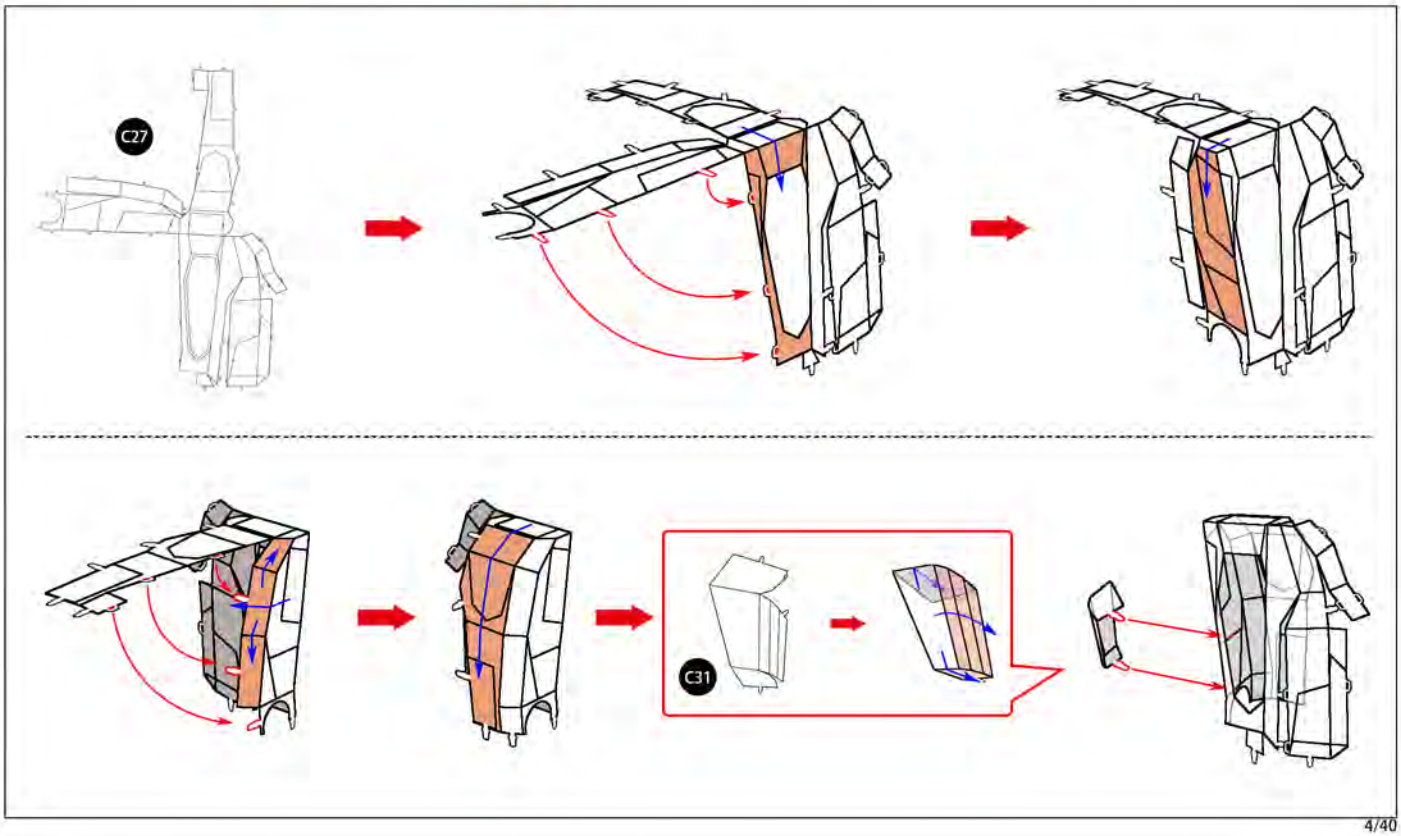
C27
C31

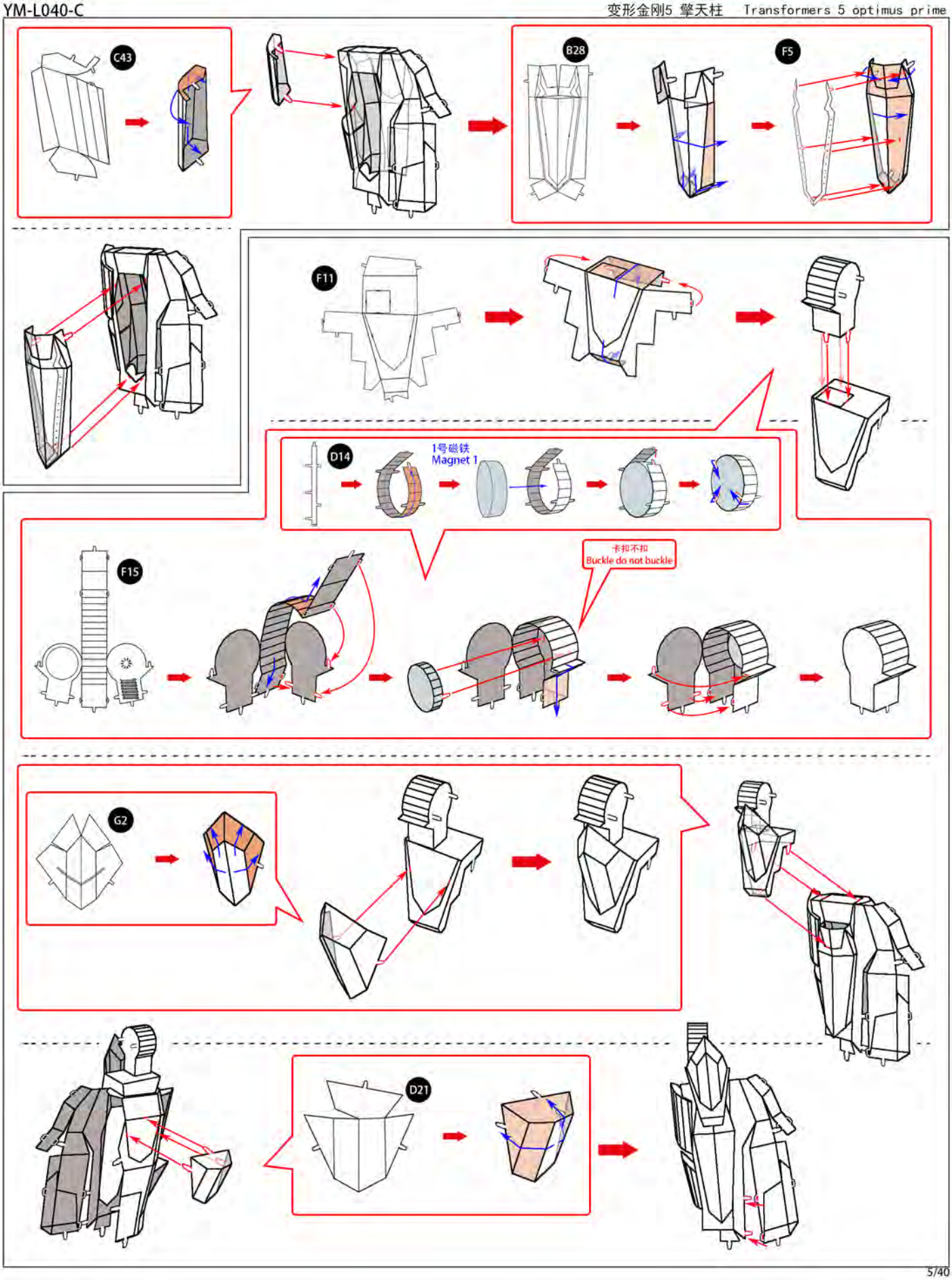
C43
B28
F5
F11
D14
1号磁铁
Magnet 1
F15
卡扣不扣
Buckle do not buckle
G2
D21

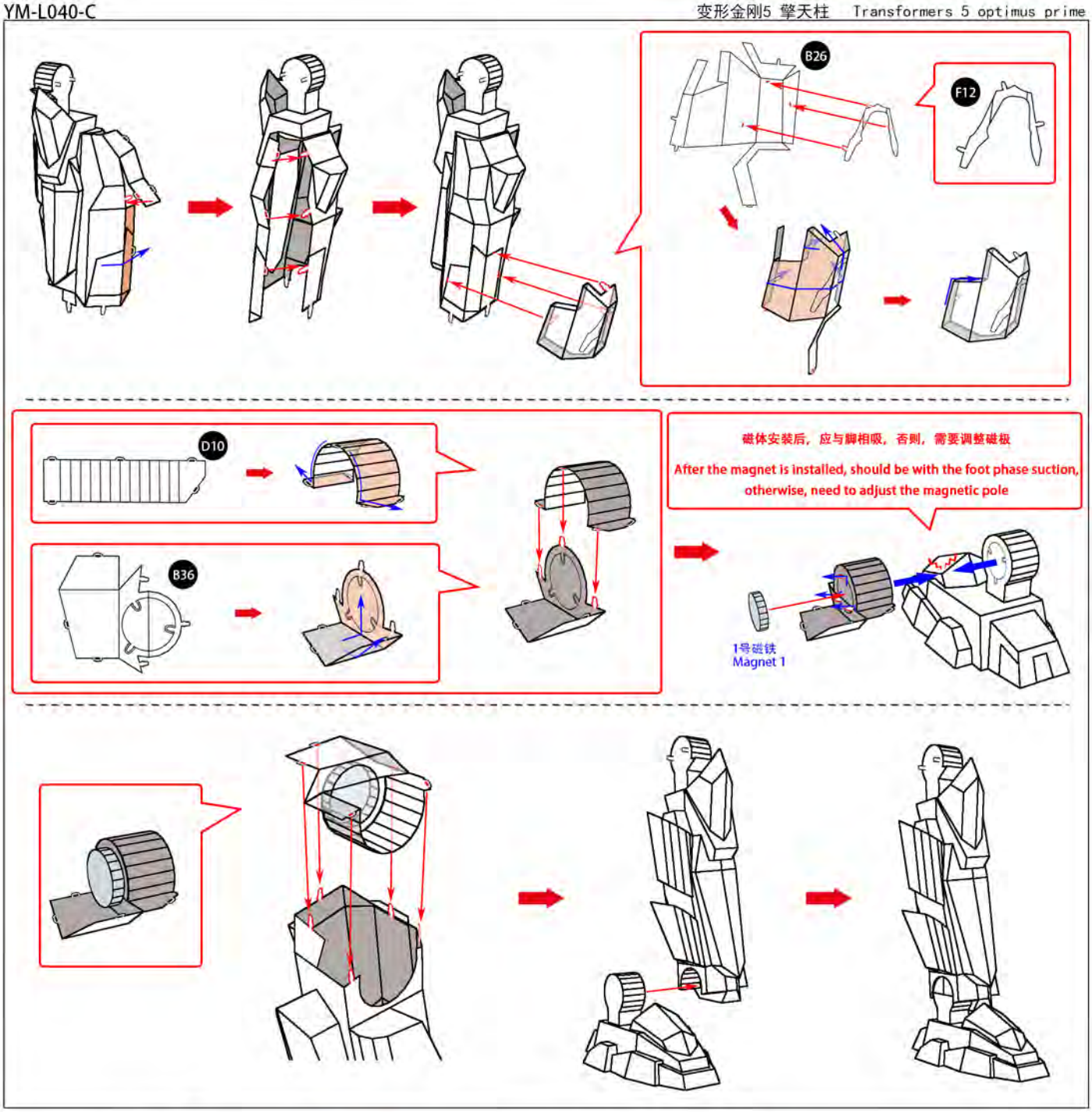
B26
F12
D10
B36
磁体安装后，应与脚相吸，否则，需要调整磁极
After the magnet is installed, should be with the foot phase suction, otherwise, need to adjust the magnetic pole
1号磁铁
Magnet 1

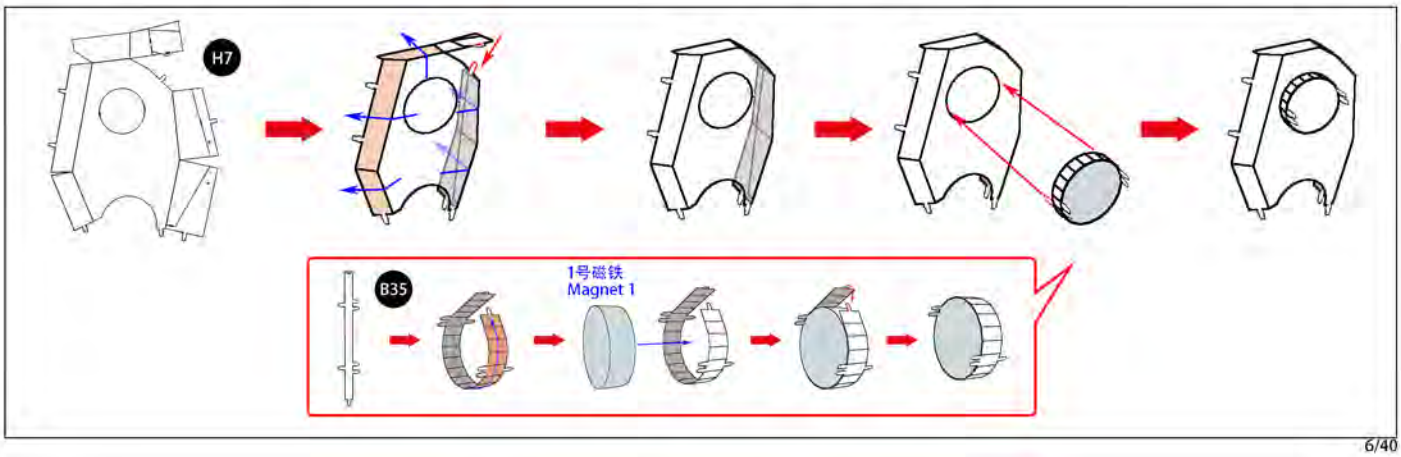
H7
B35
1号磁铁
Magnet 1

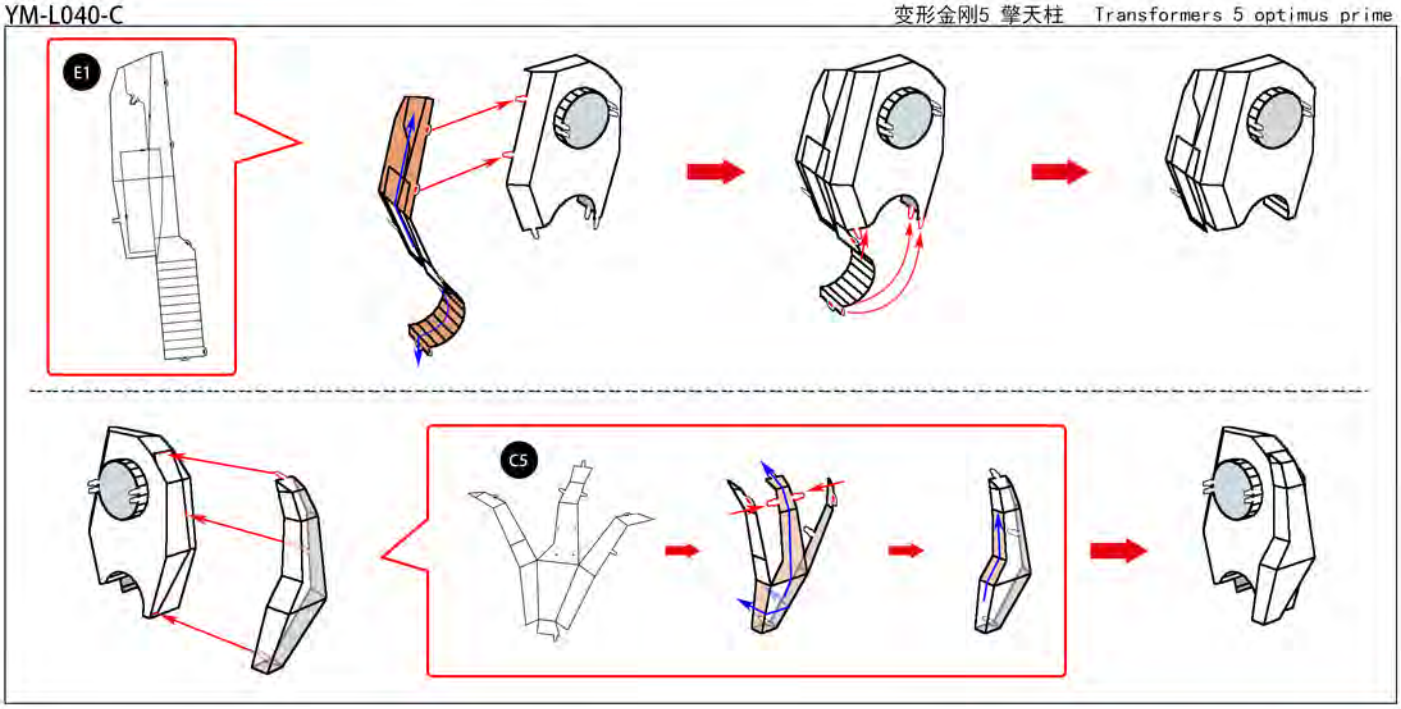
E1
C5

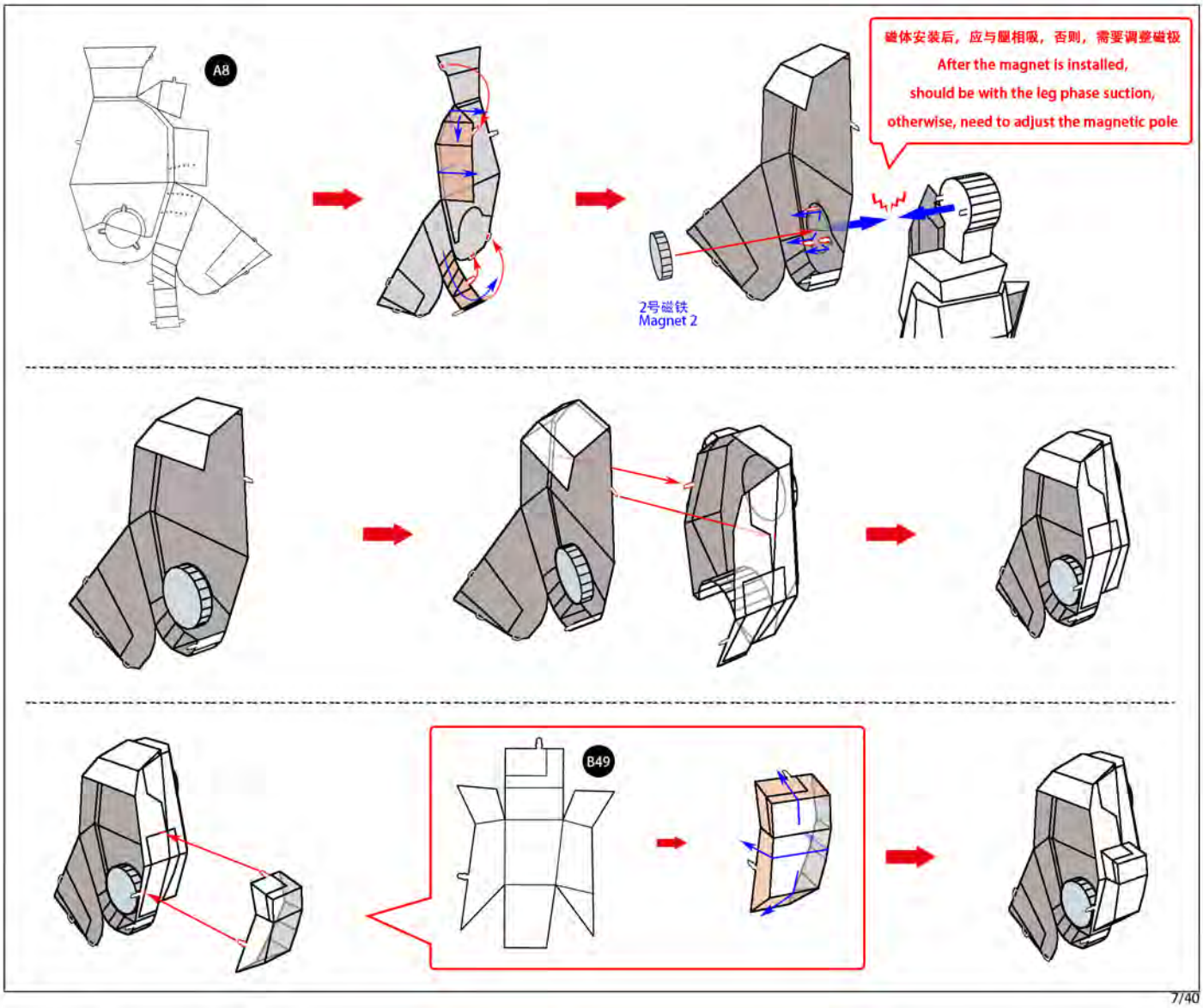
A8
磁体安装后，应与腿相吸，否则，需要调整磁极
After the magnet is installed,
should be with the leg phase suction,
otherwise, need to adjust the magnetic pole
2号磁铁
Magnet 2
B49

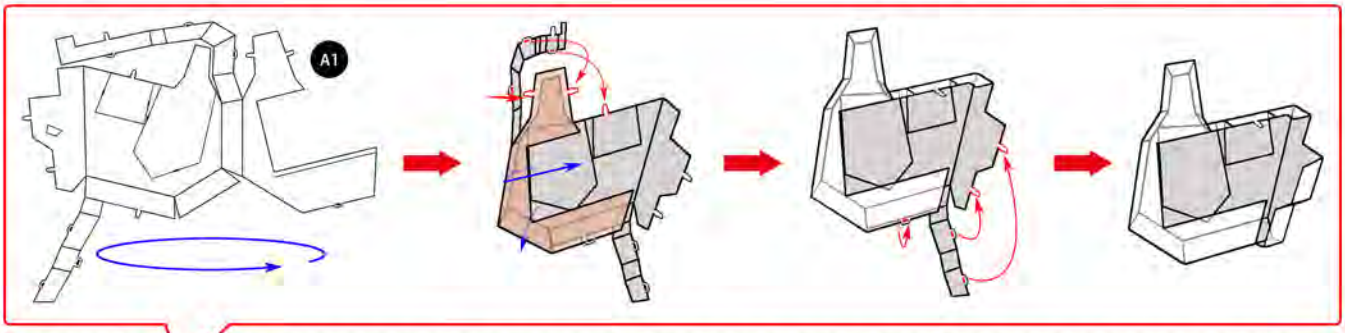
A1

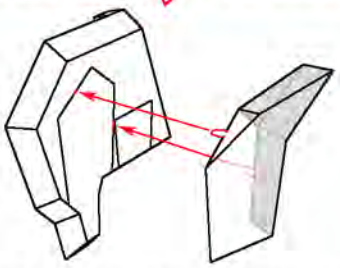

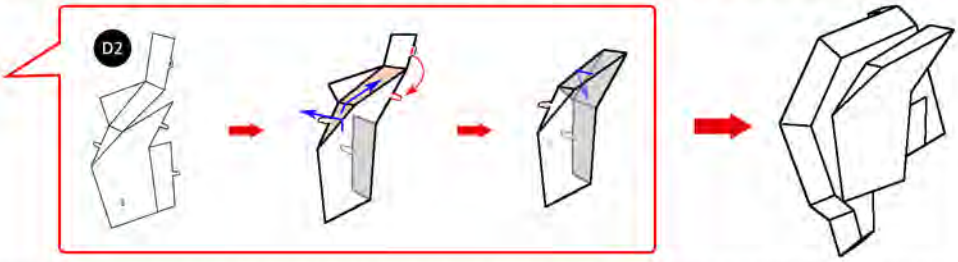
D2

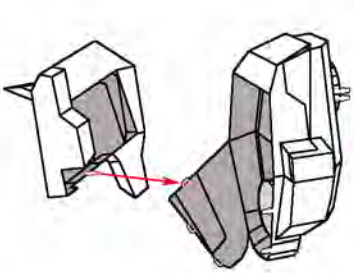

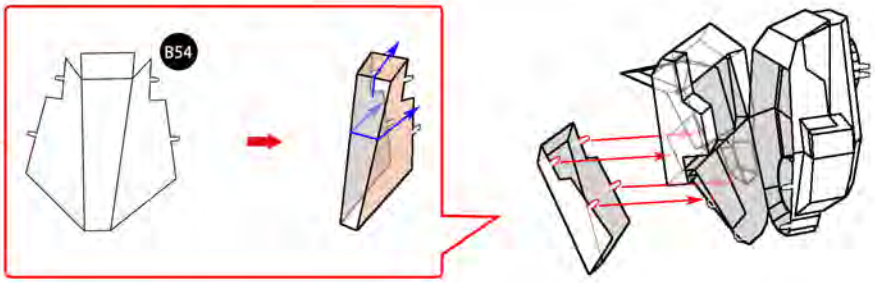
B54

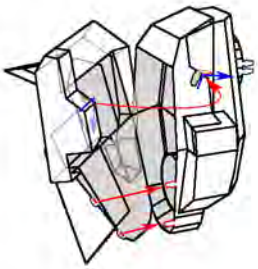

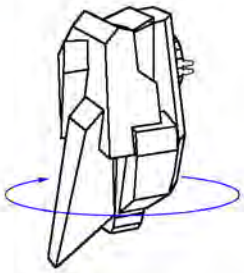

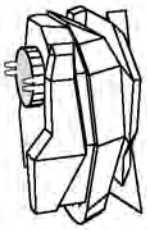

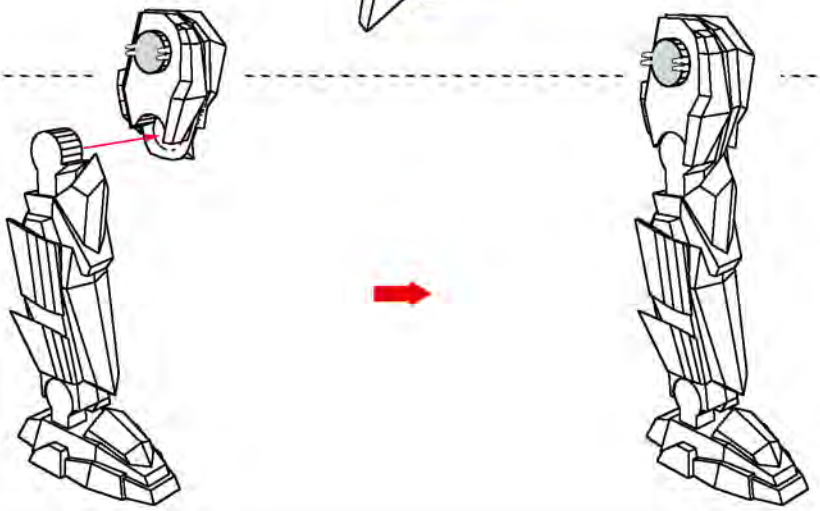

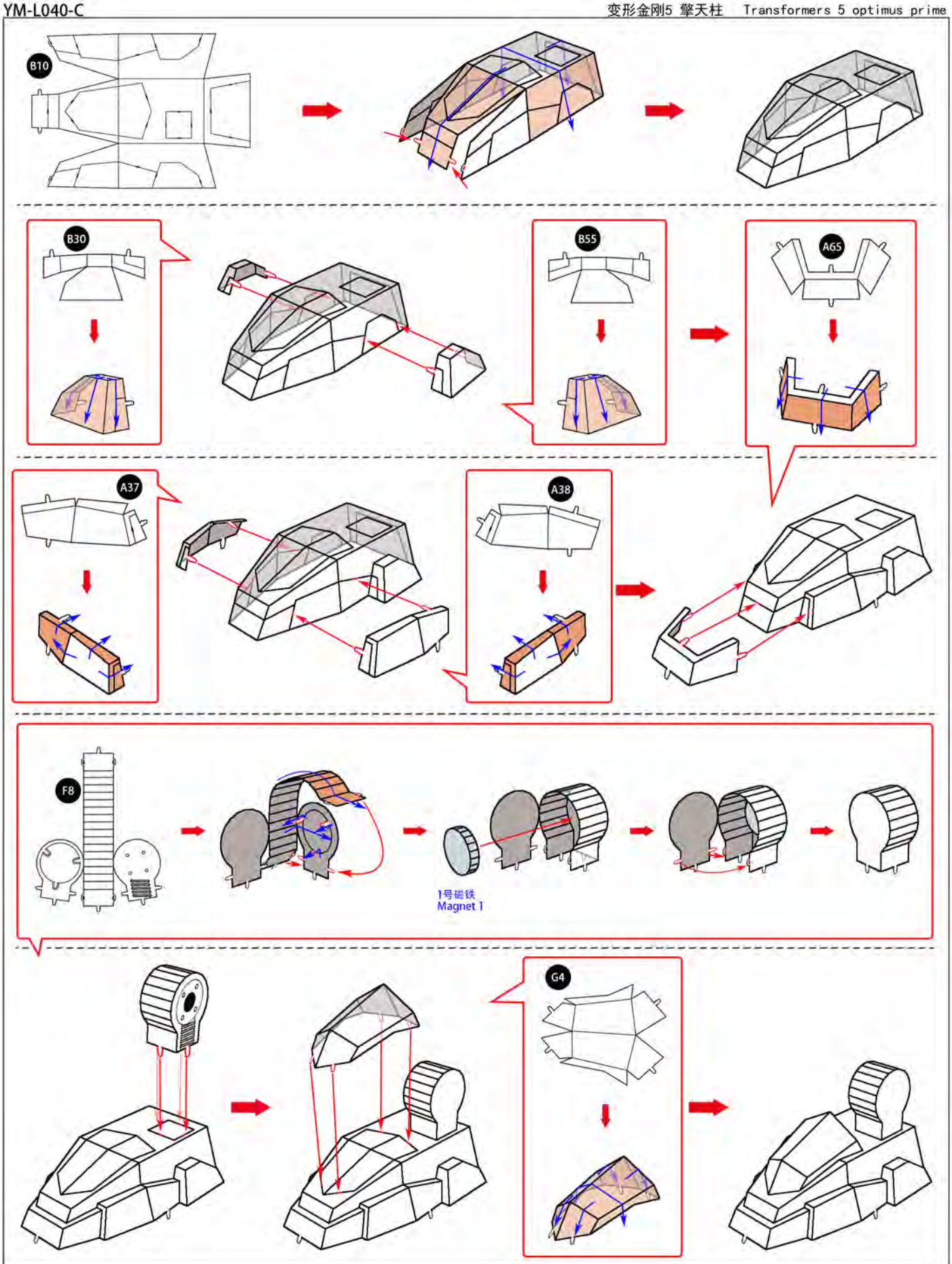
B10
B30
B55
A65
A37
A38
F8
1号磁铁
Magnet 1
G4

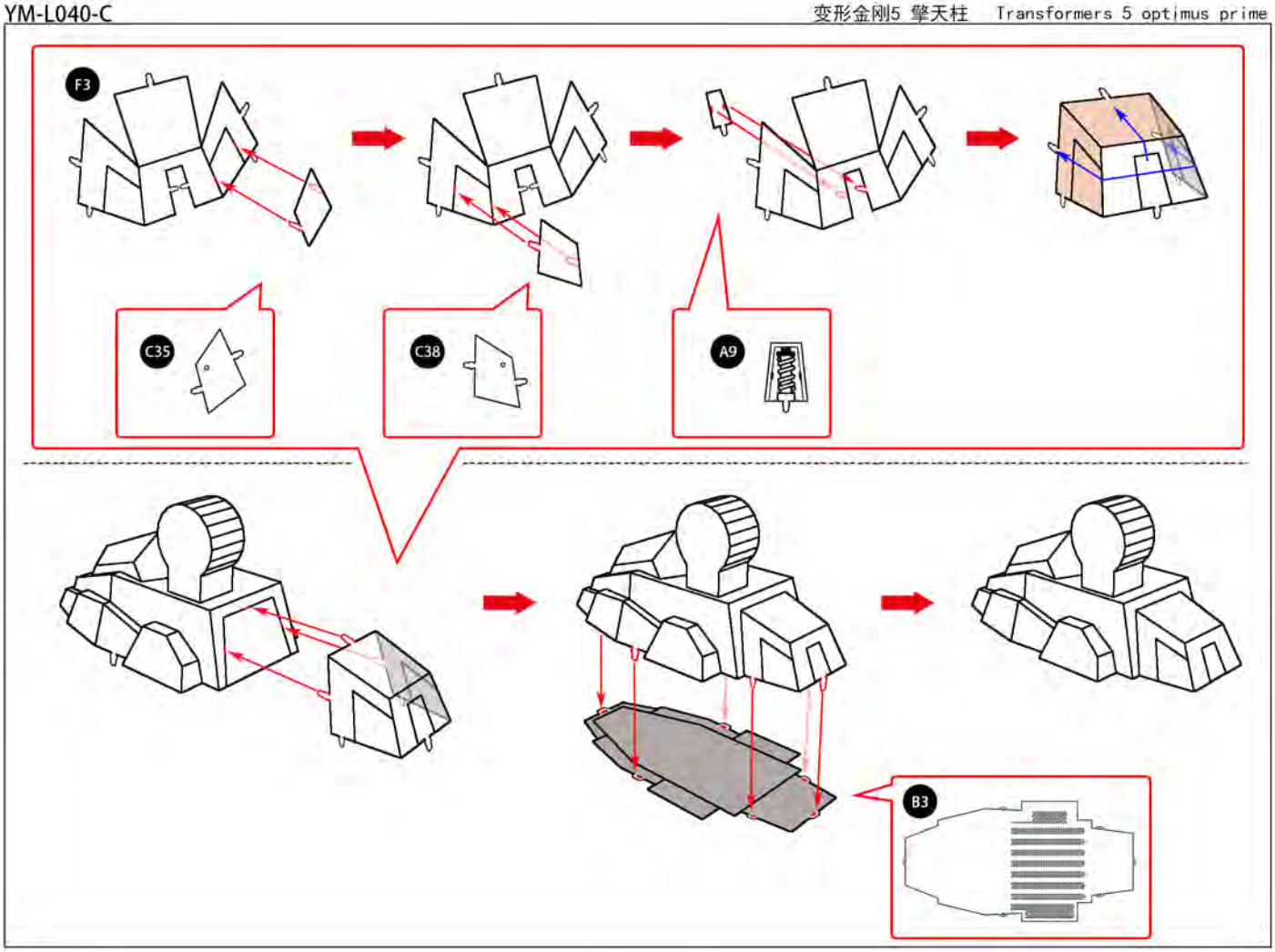
F3
C35
C38
A9
B3

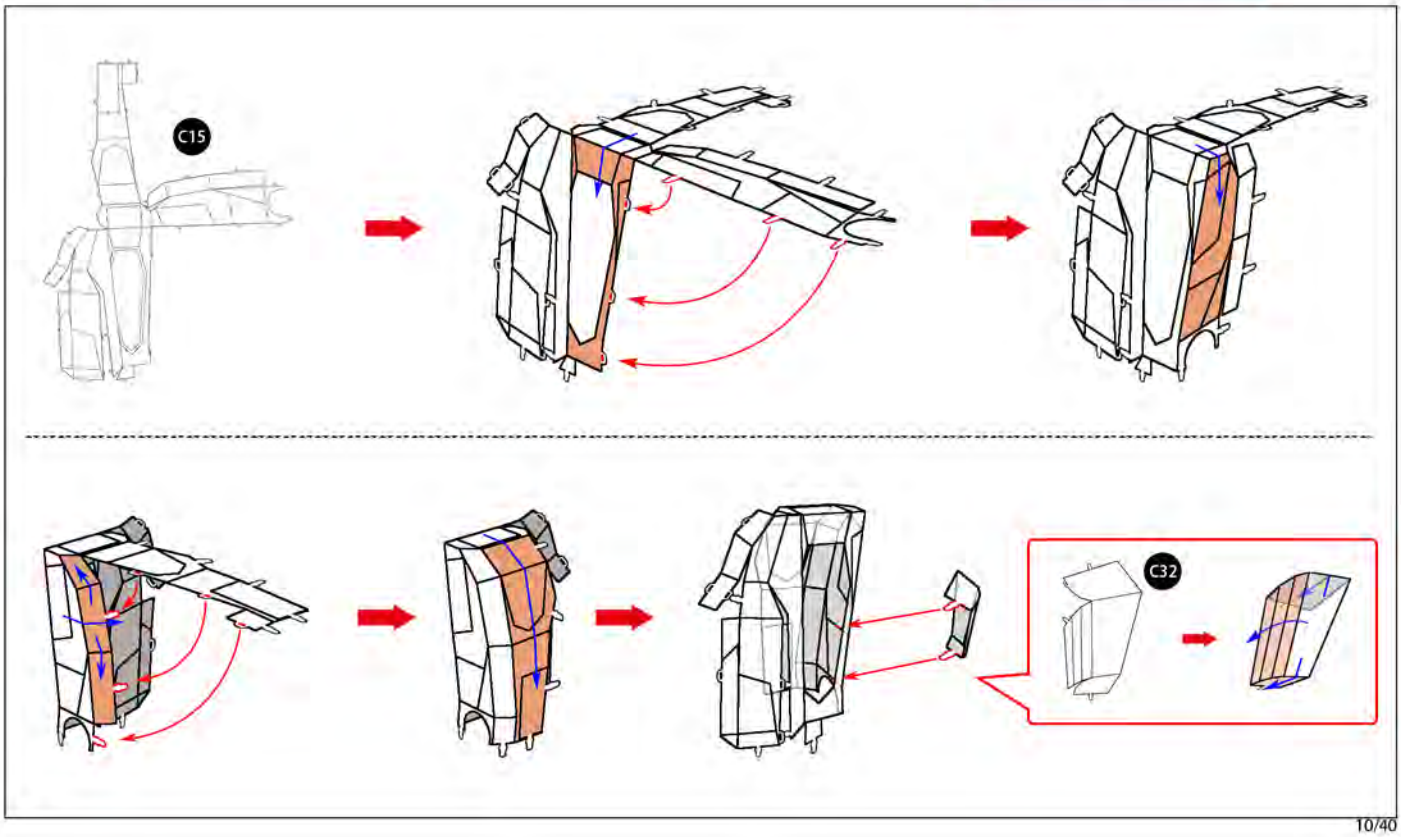
C15
C32

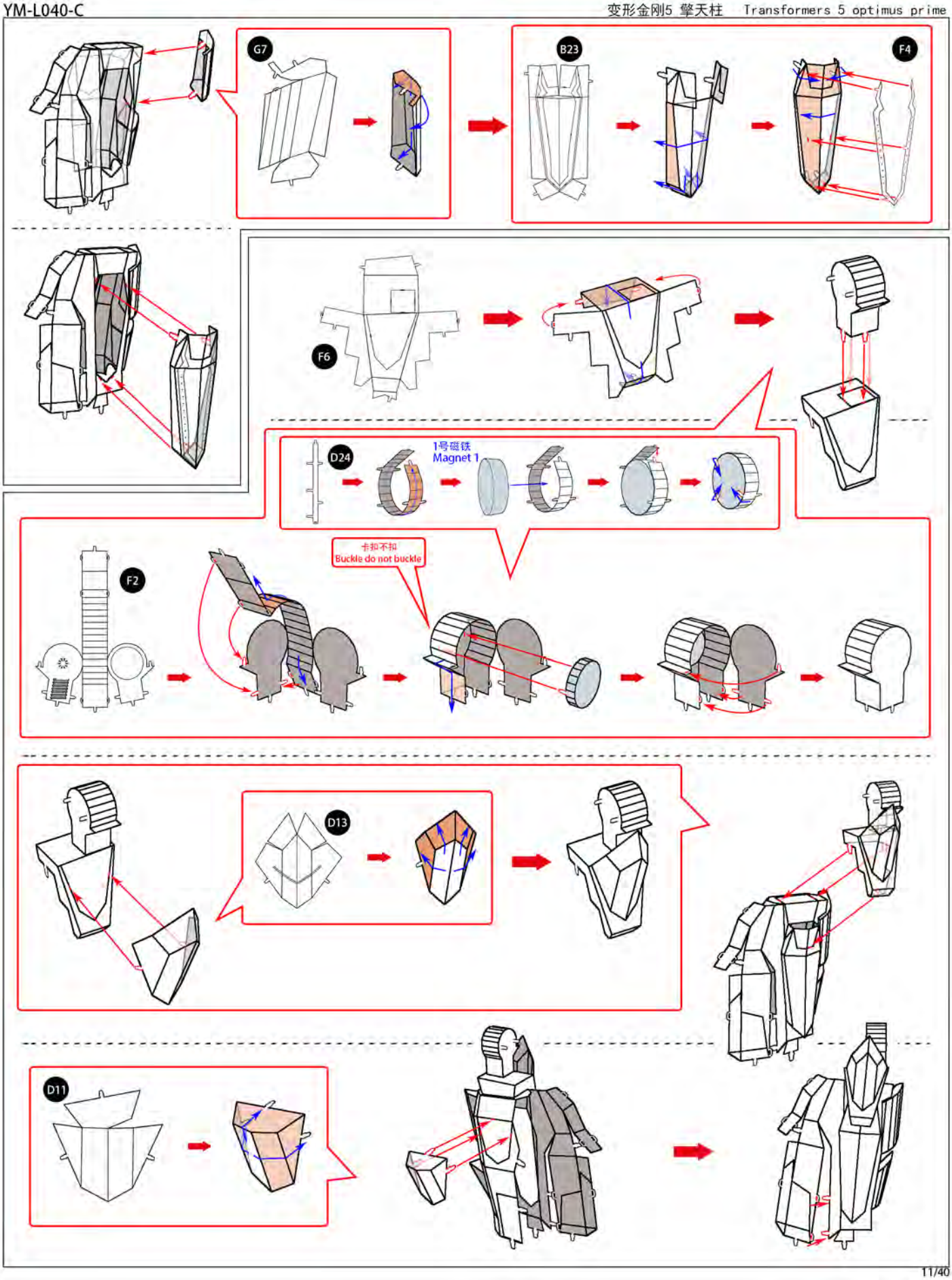
G7
B23
F4
F6
D24
1号磁铁
Magnet 1
卡扣不扣
Buckle do not buckle
F2
D13
D11

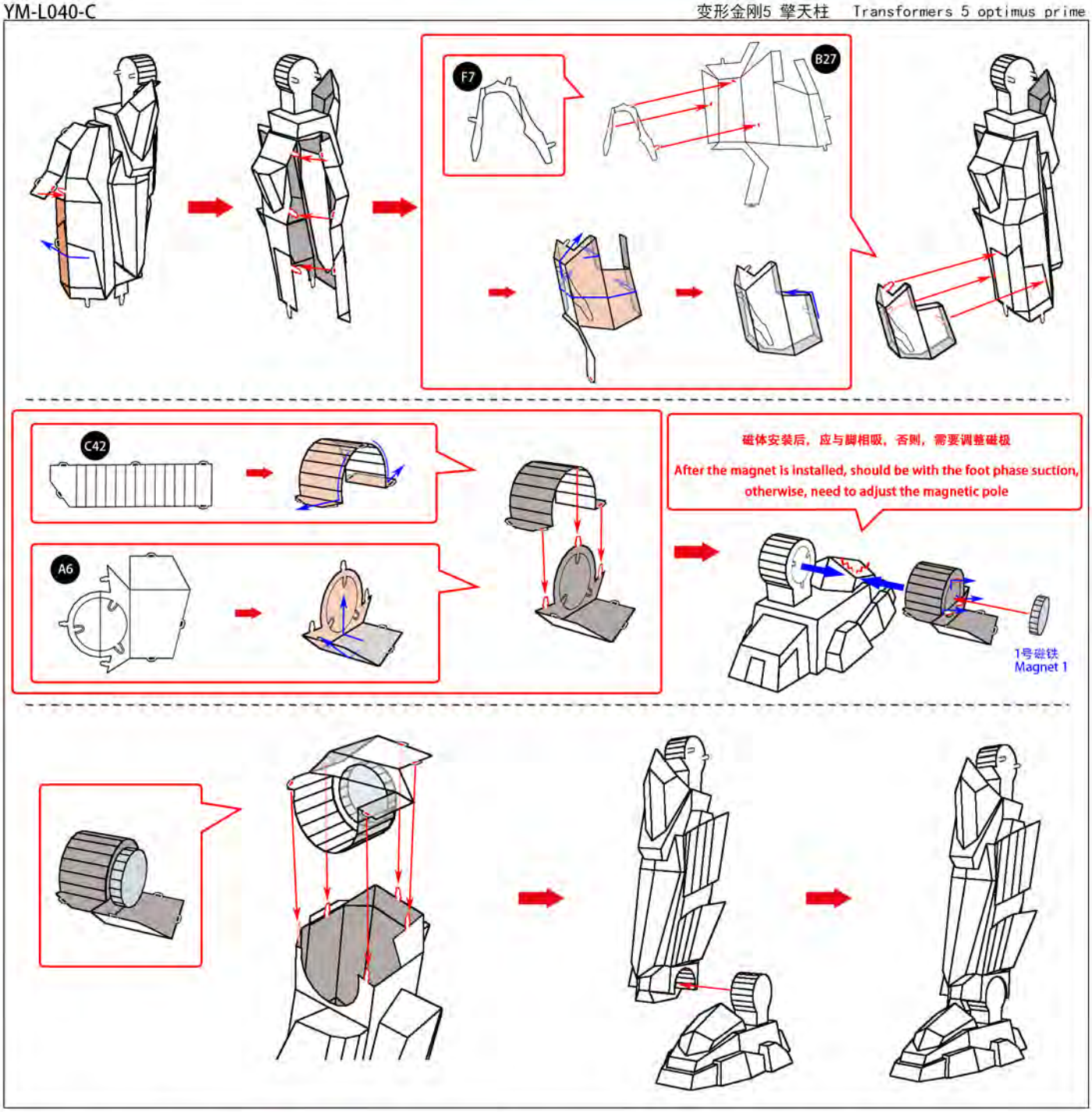
F7
B27
C42
A6
磁体安装后，应与脚相吸，否则，需要调整磁极
After the magnet is installed, should be with the foot phase suction, otherwise, need to adjust the magnetic pole
1号磁铁
Magnet 1

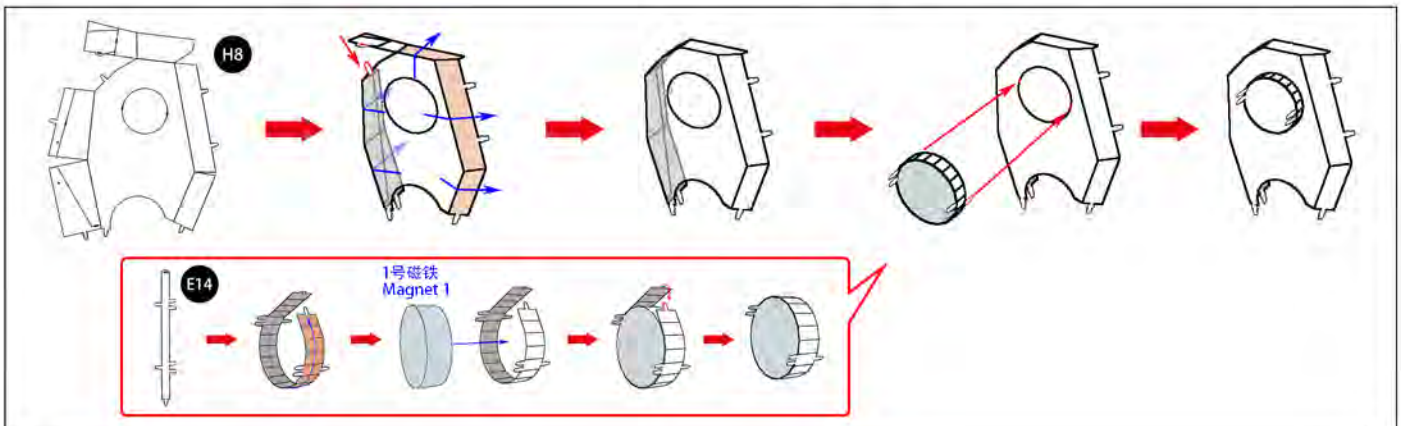
H8
E14
1号磁铁
Magnet 1

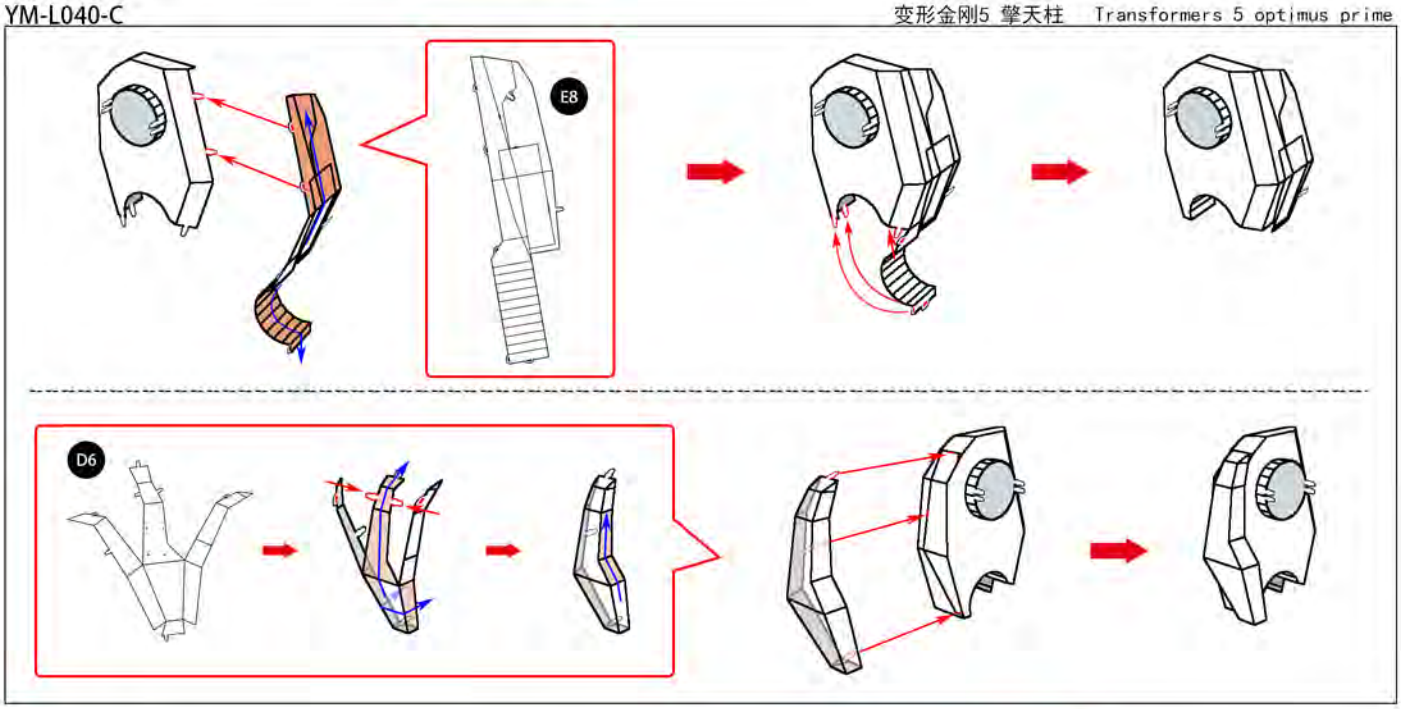
E8
D6

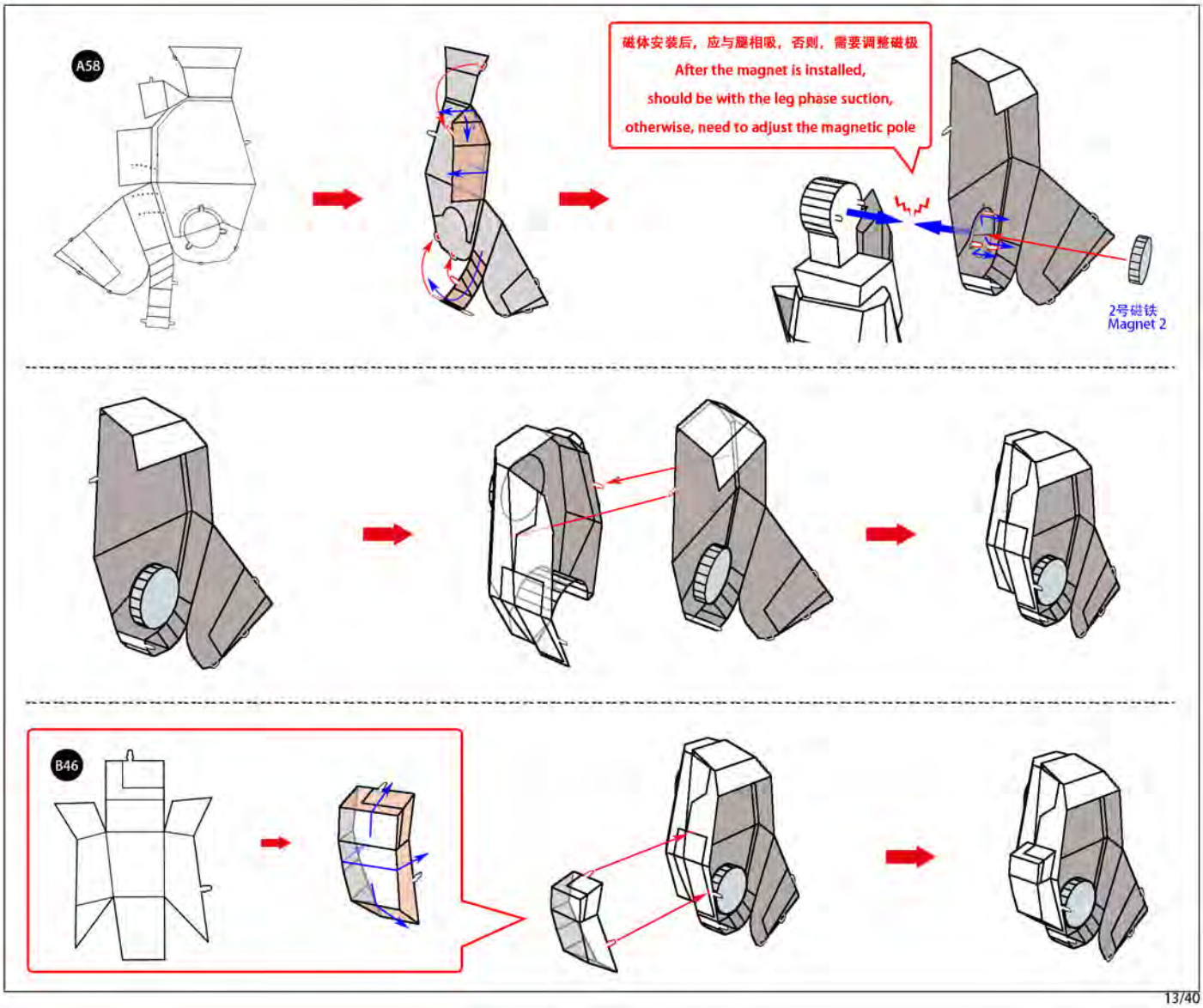
A58
磁体安装后，应与腿相吸，否则，需要调整磁极
After the magnet is installed,
should be with the leg phase suction,
otherwise, need to adjust the magnetic pole
2号磁铁
Magnet 2
B46

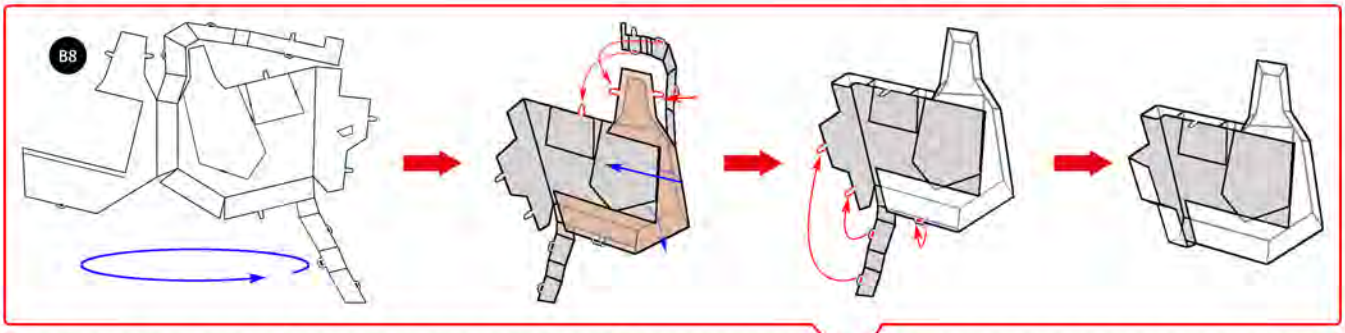
B8

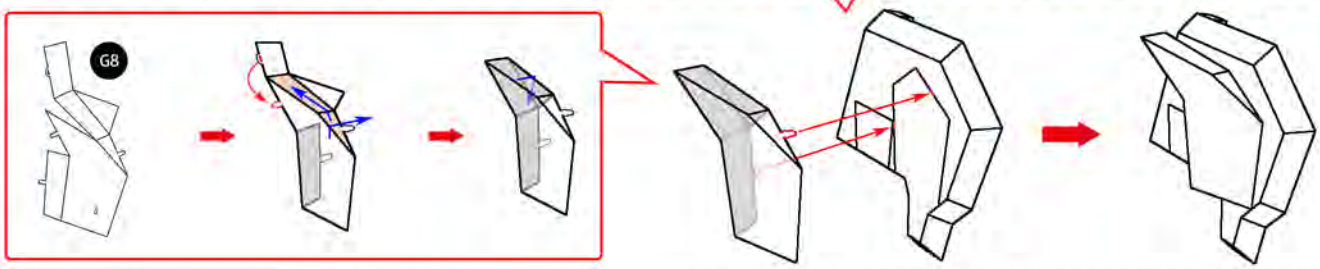
G8

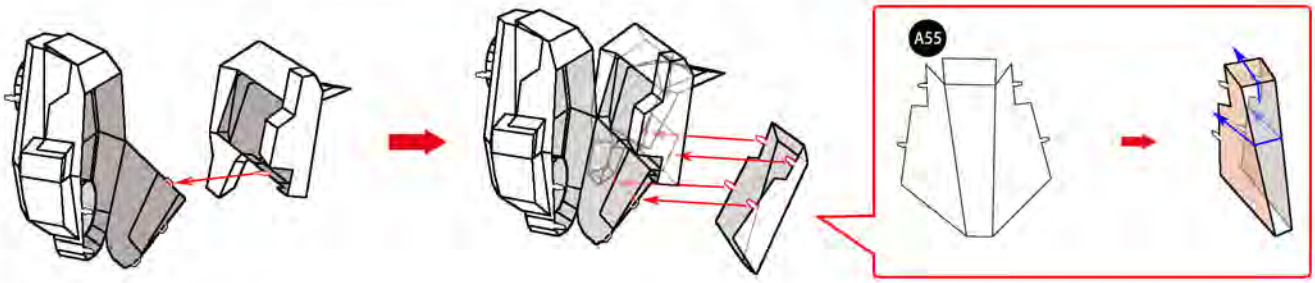
A55

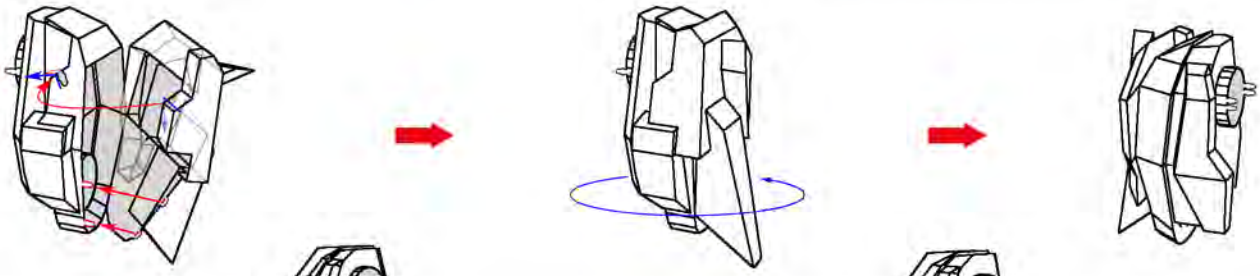

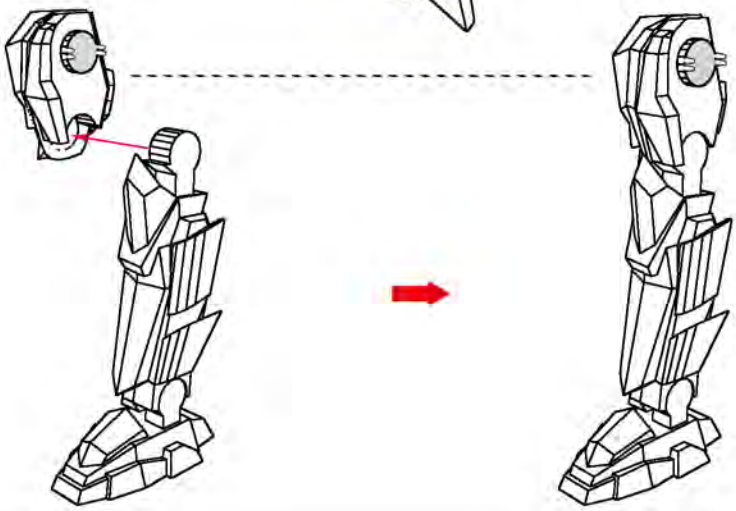

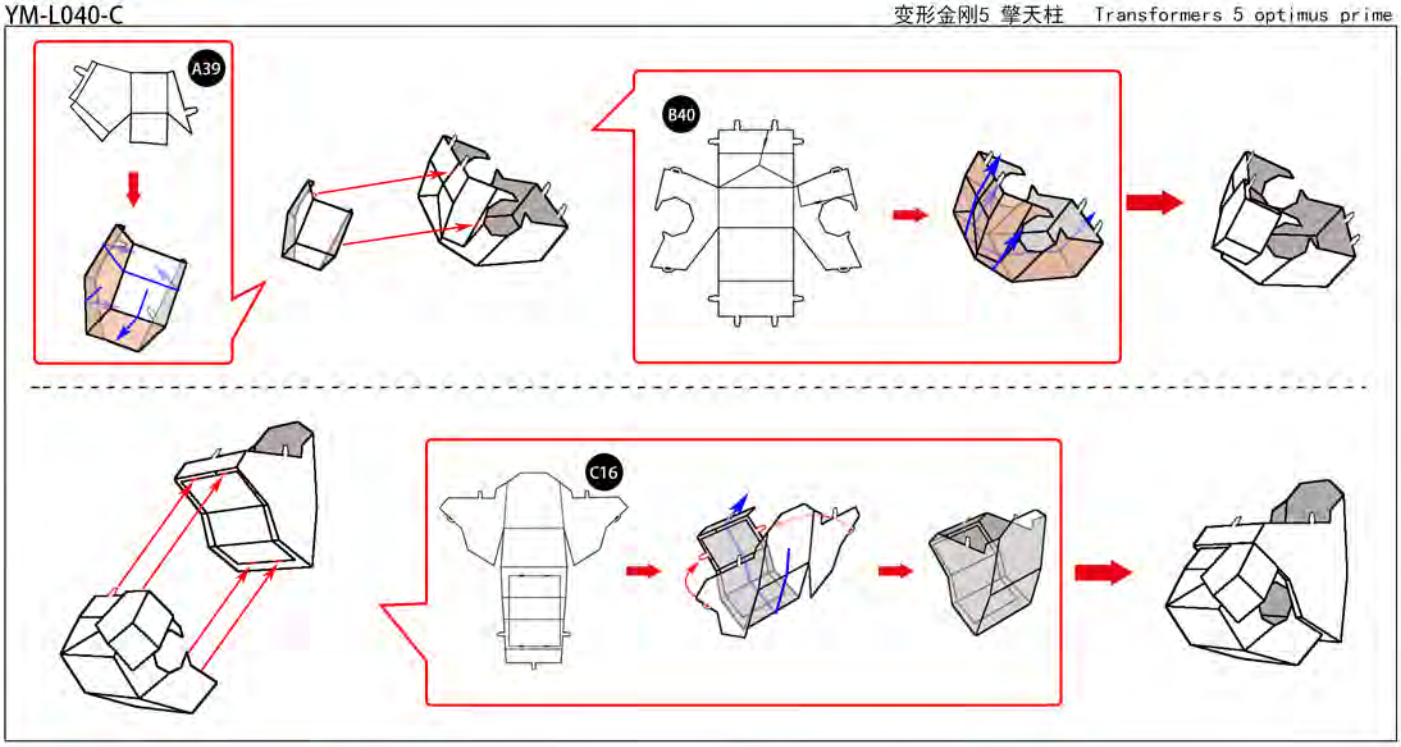
A39
B40
C16

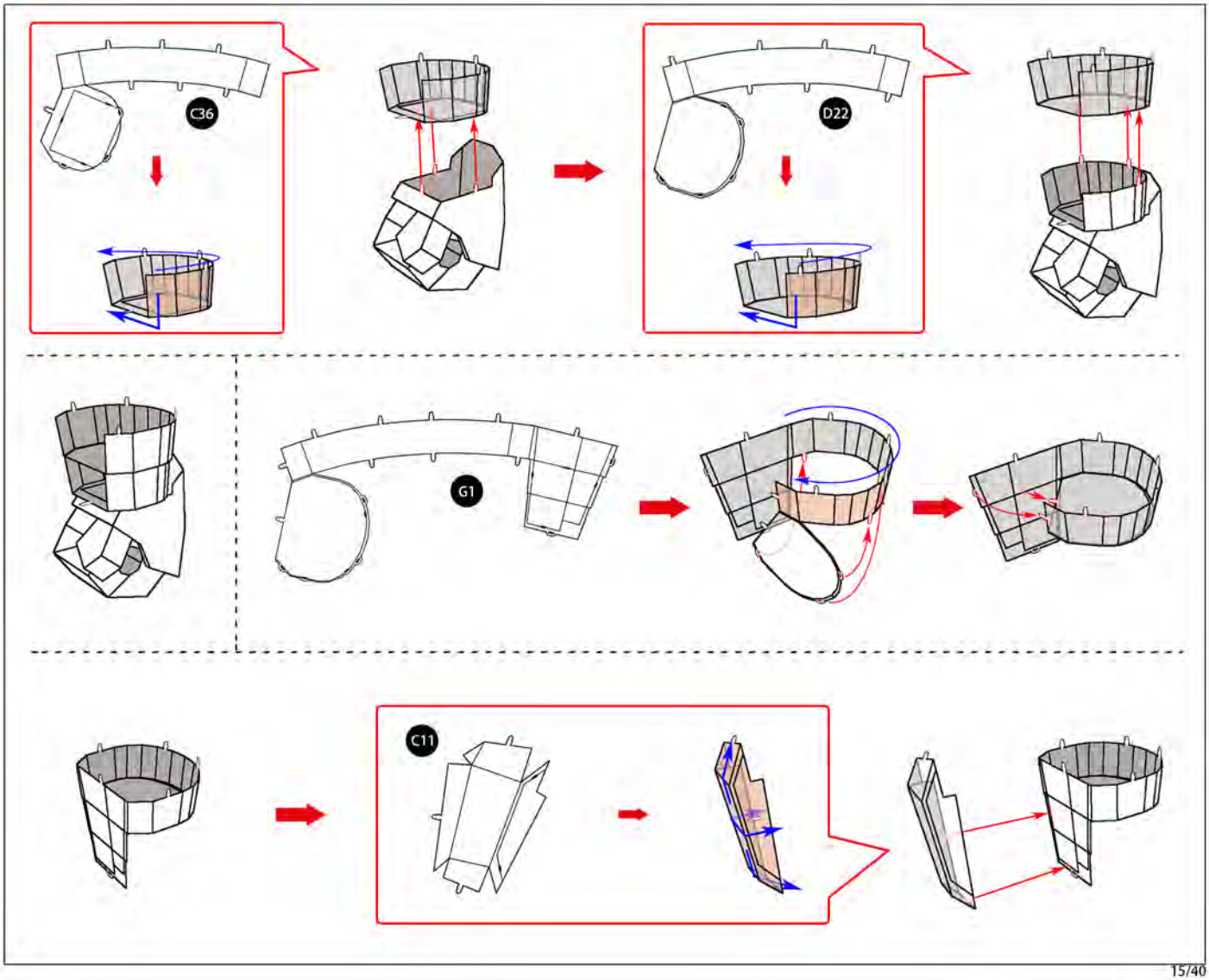
C36
D22
G1
C11

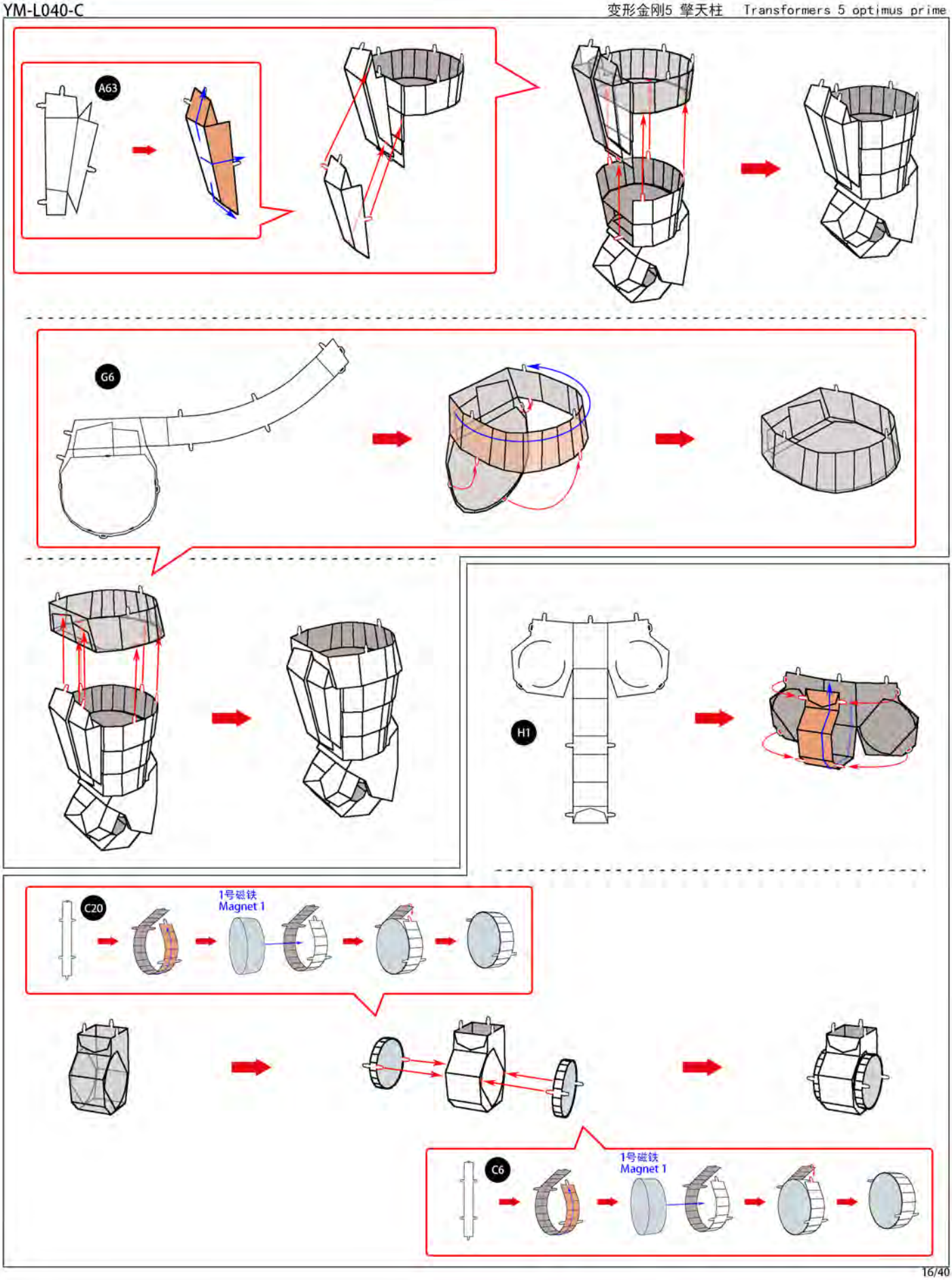
A63
G6
H1
C20
1号磁铁
Magnet 1
C6
1号磁铁
Magnet 1

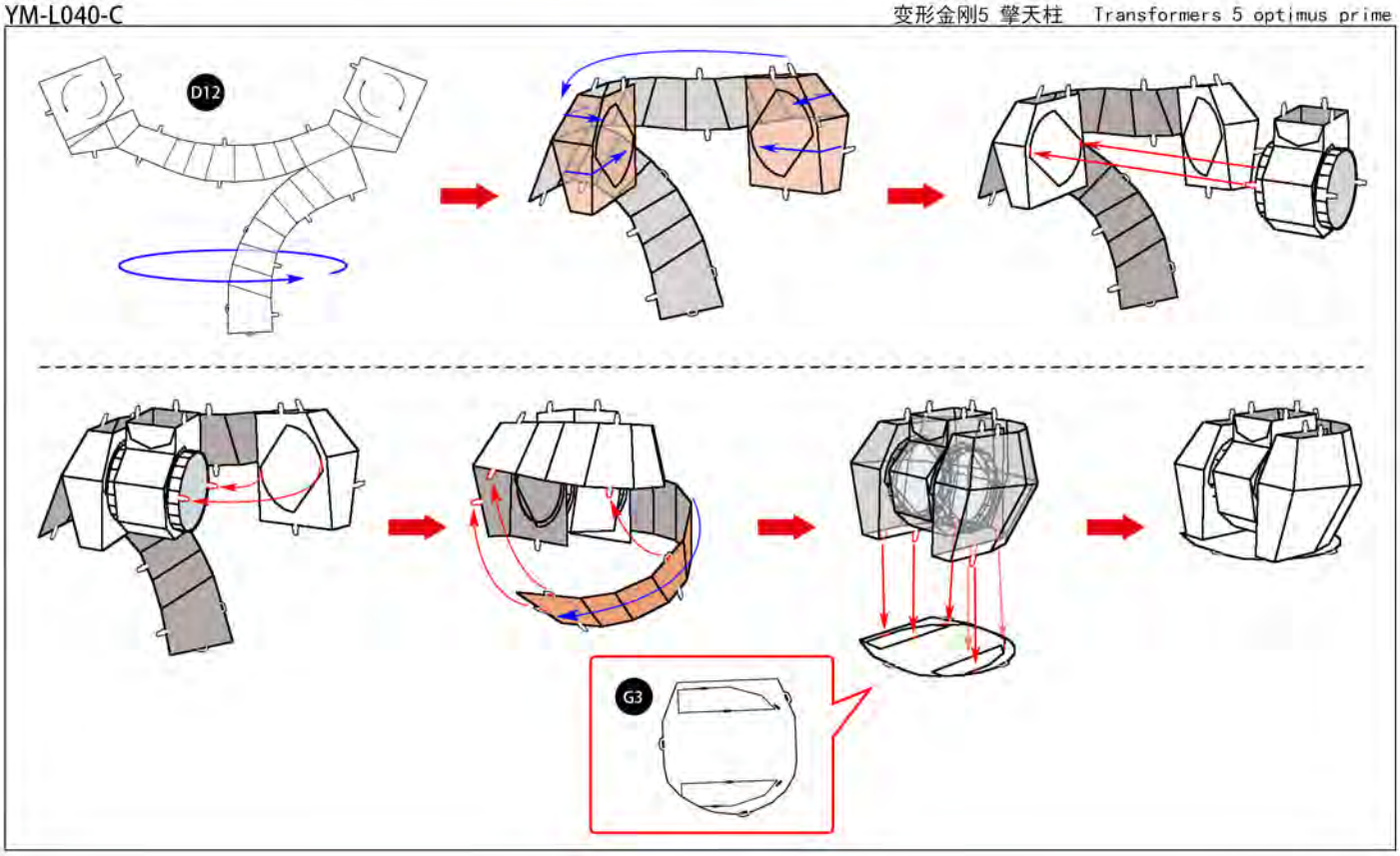
D12
G3

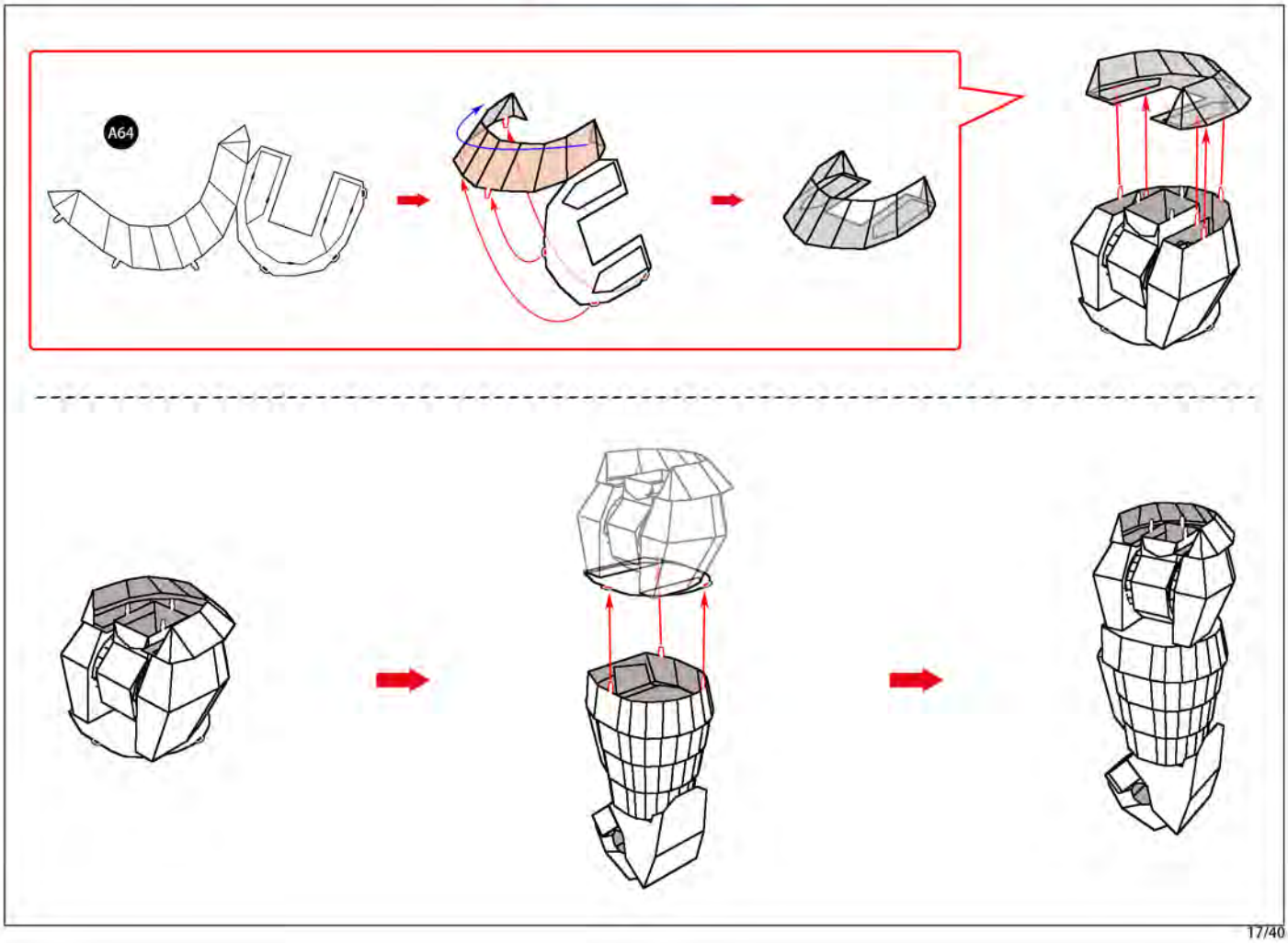
A64

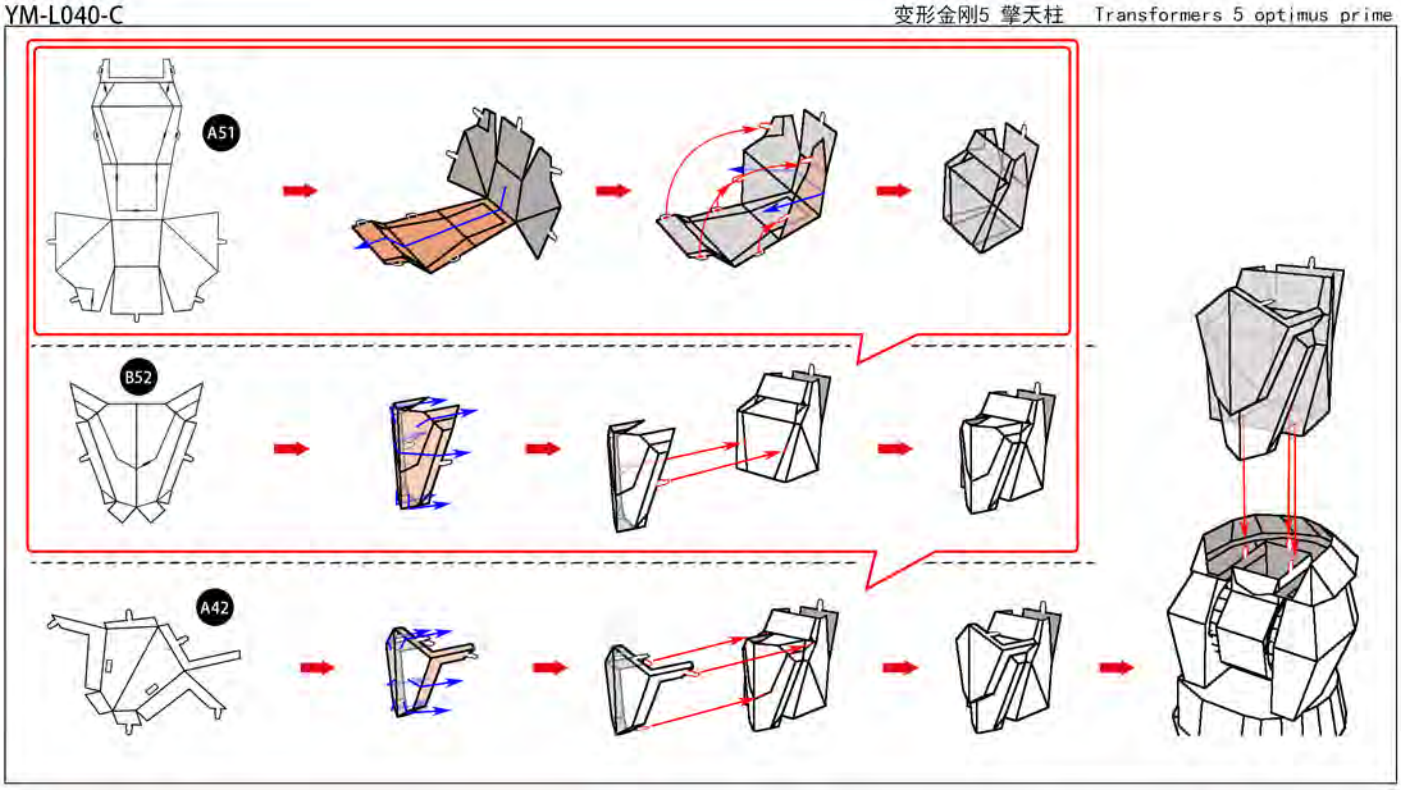
A51
B52
A42

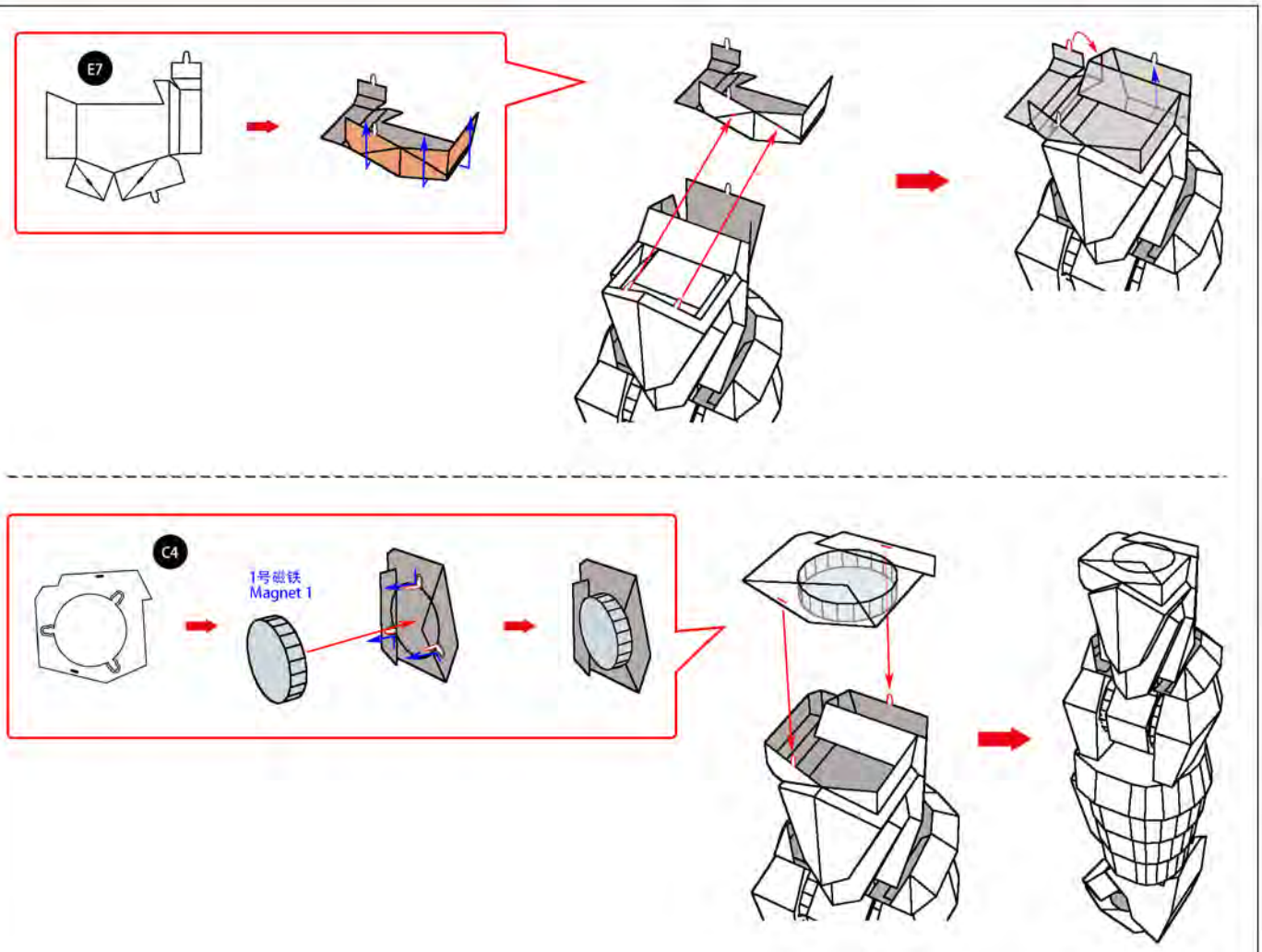
E7
C4
1号磁铁
Magnet 1

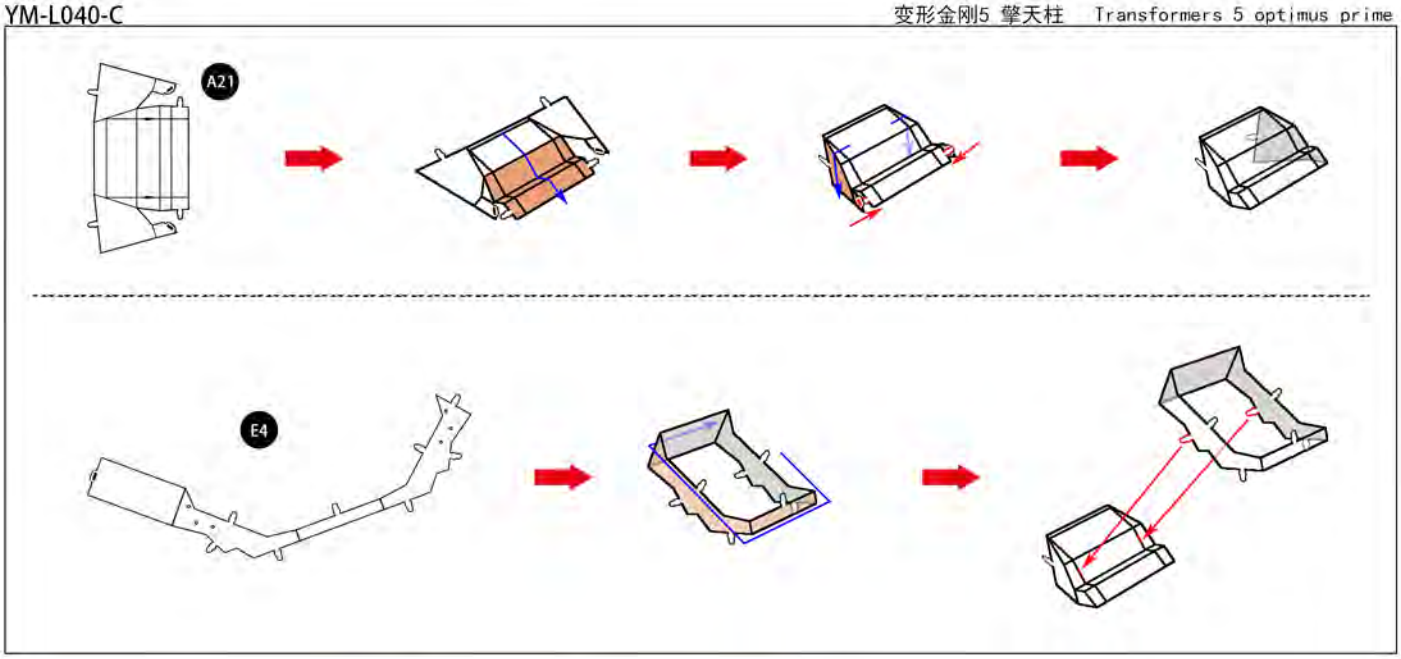
A21
E4

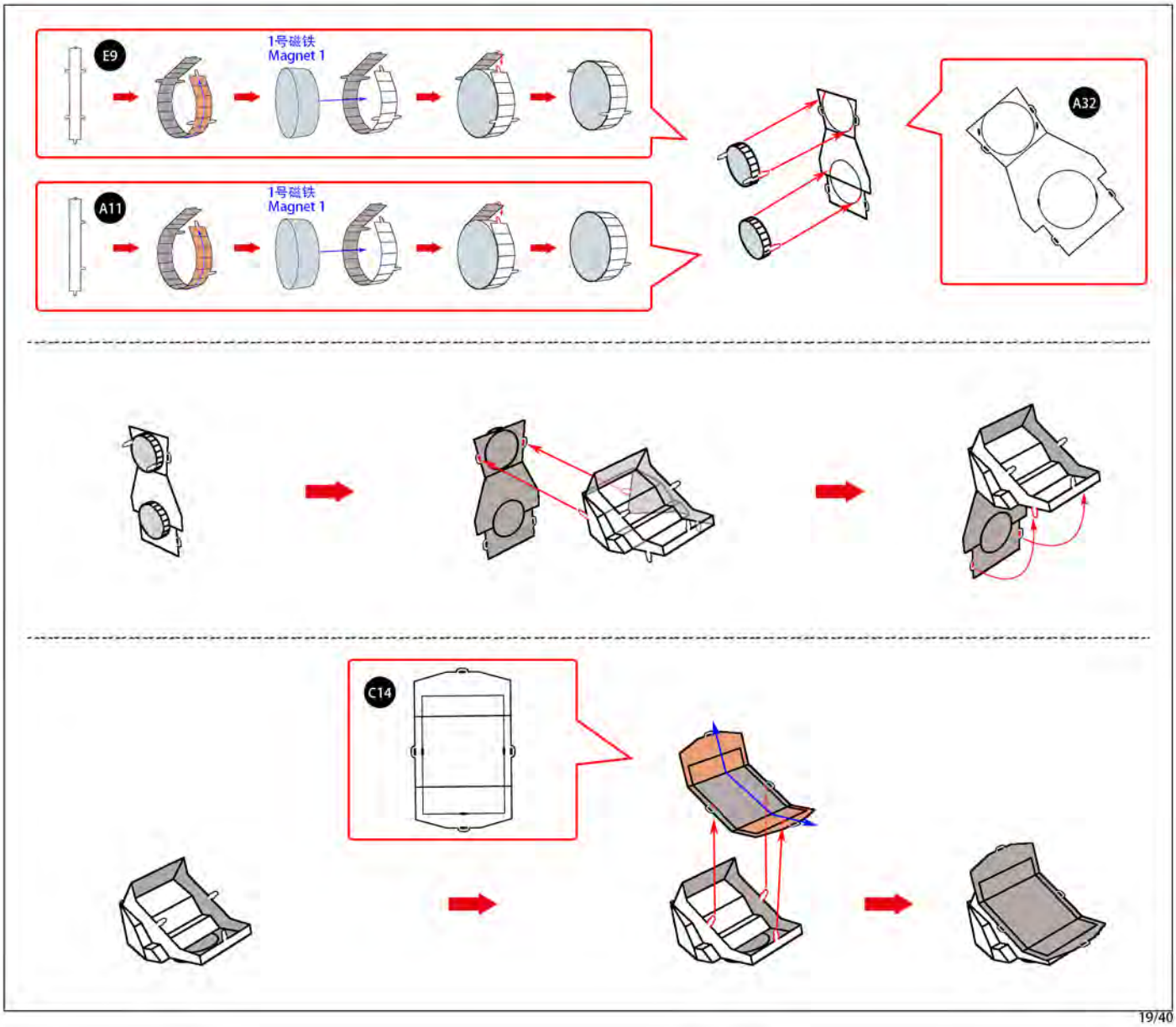
E9
1号磁铁
Magnet 1
A11
1号磁铁
Magnet 1
A32
C14

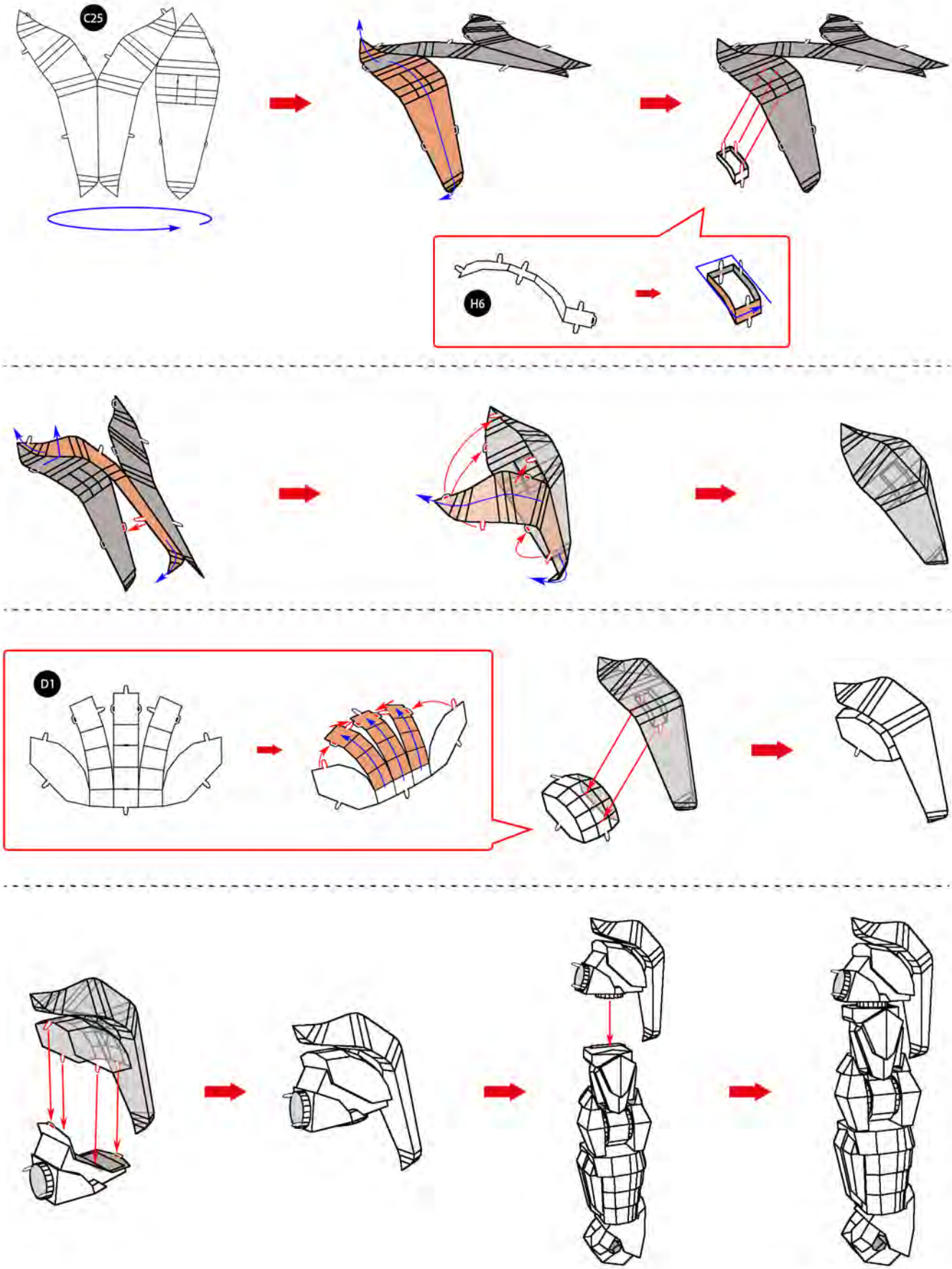
C25
H6
D1

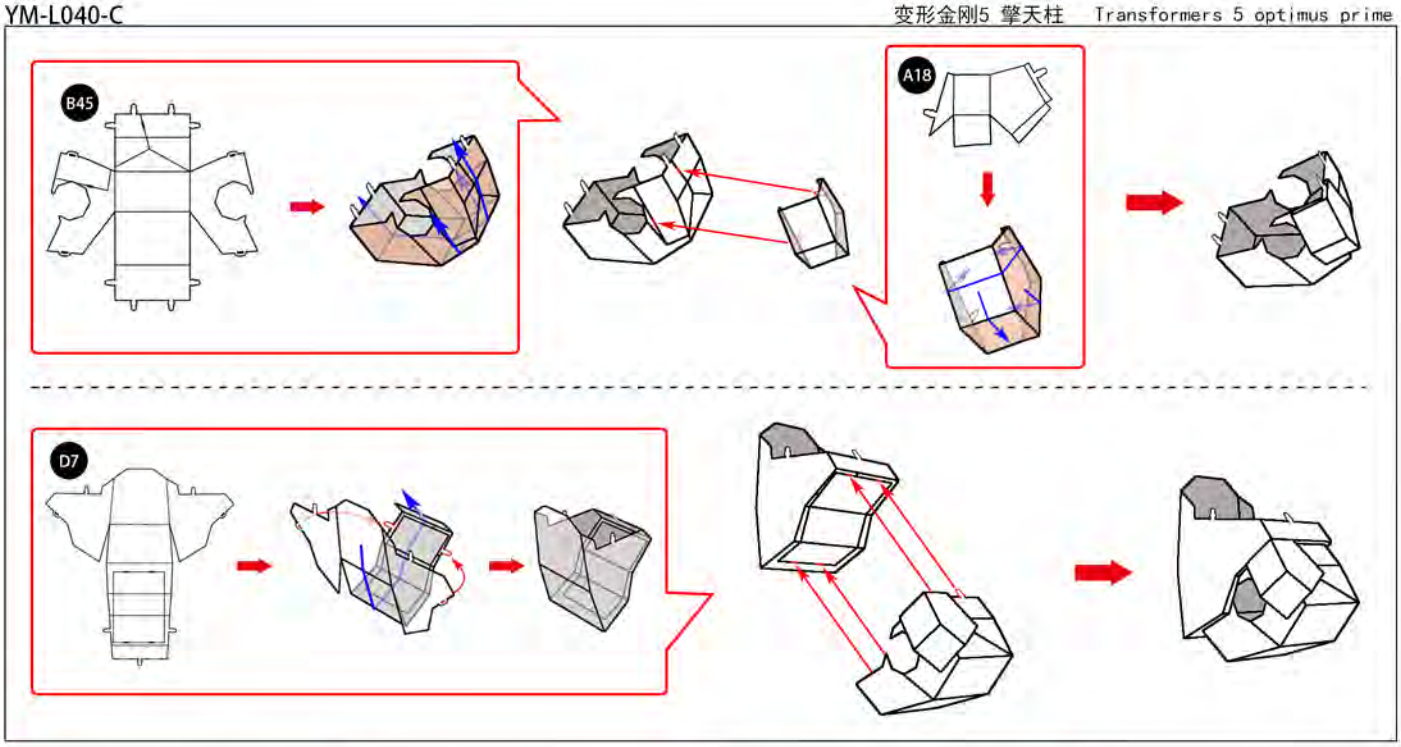
B45
A18
D7

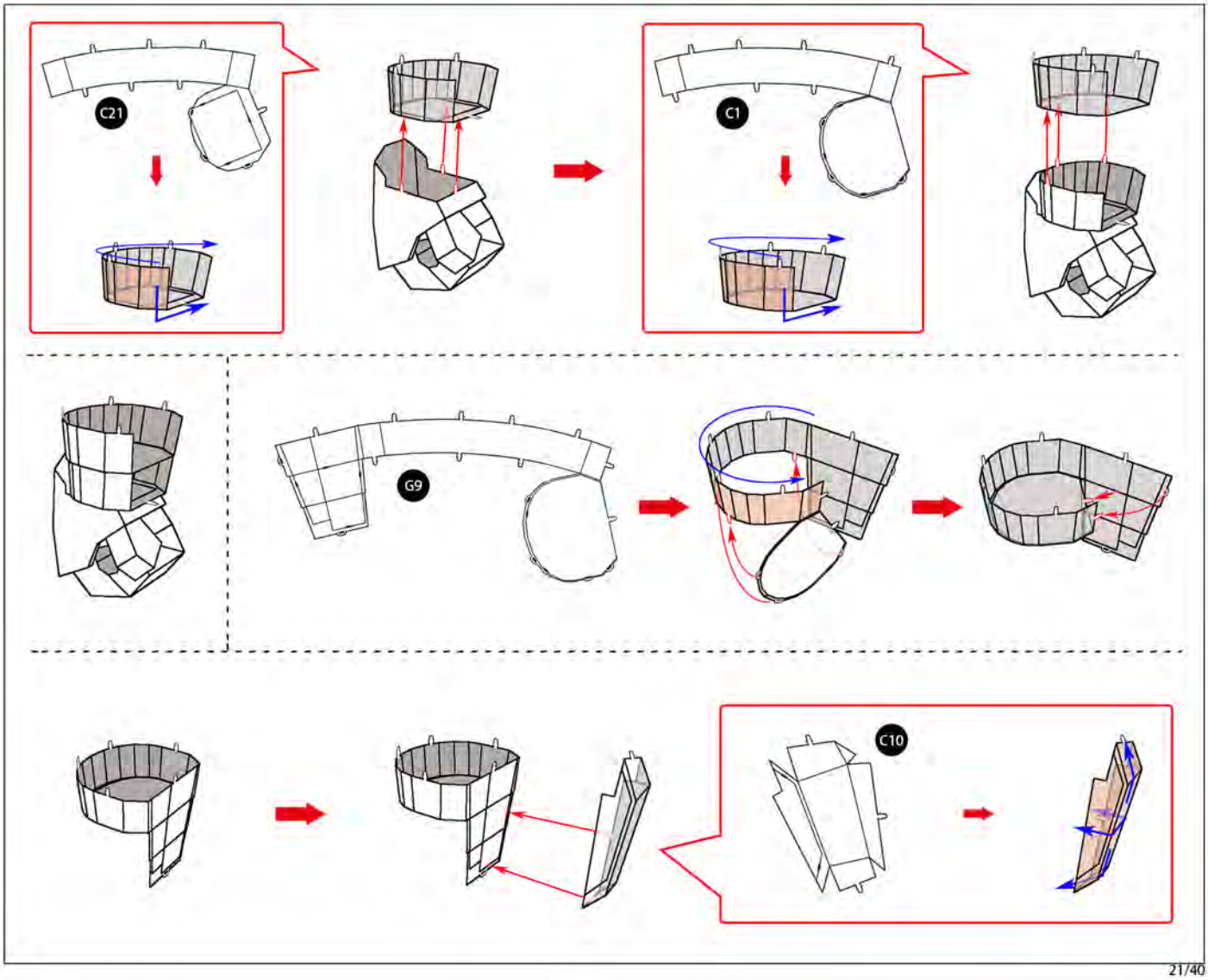
C21
C1
G9
C10

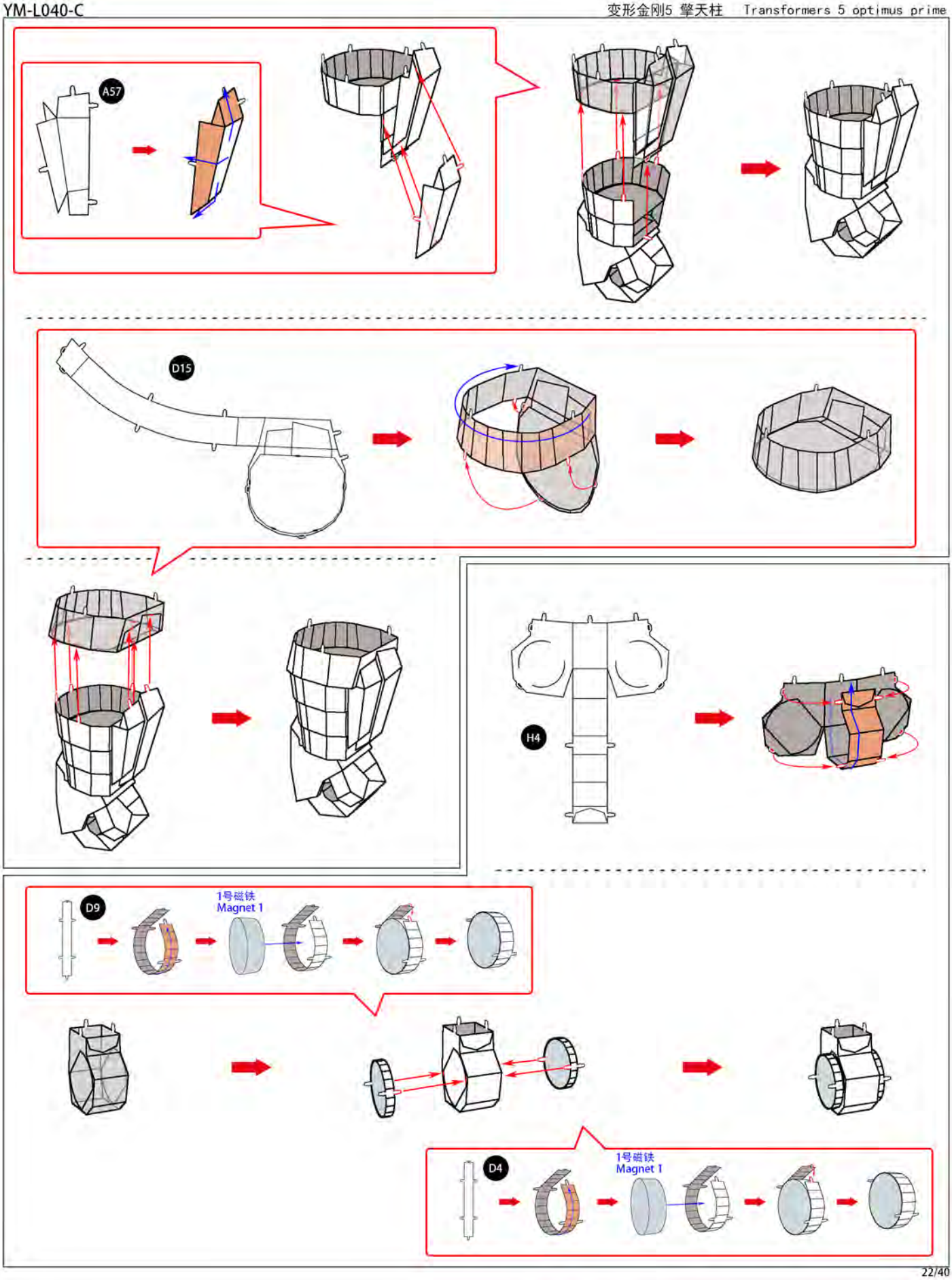
A57
D15
H4
D9
1号磁铁
Magnet 1
D4
1号磁铁
Magnet 1

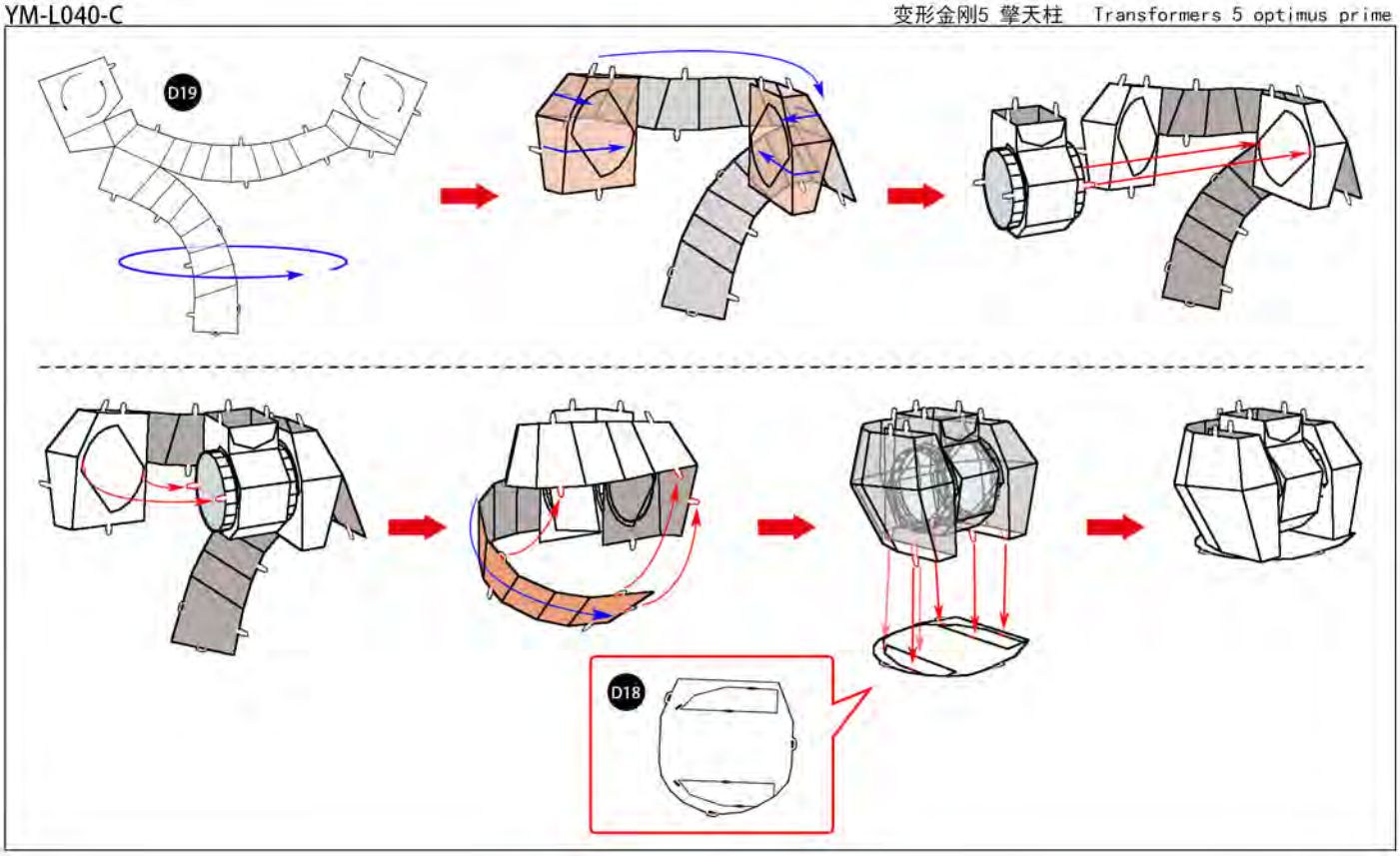
D19
D18

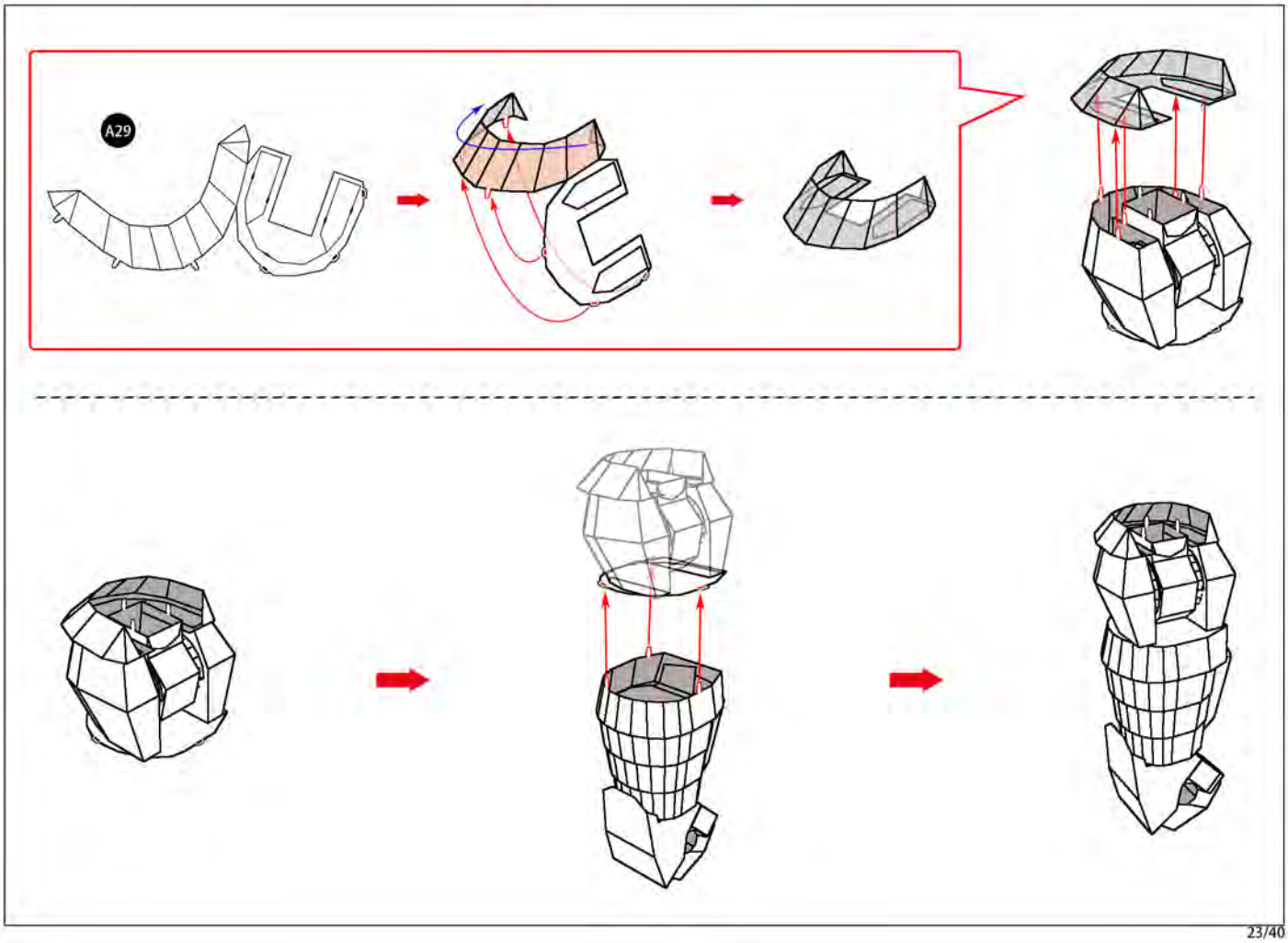
A29

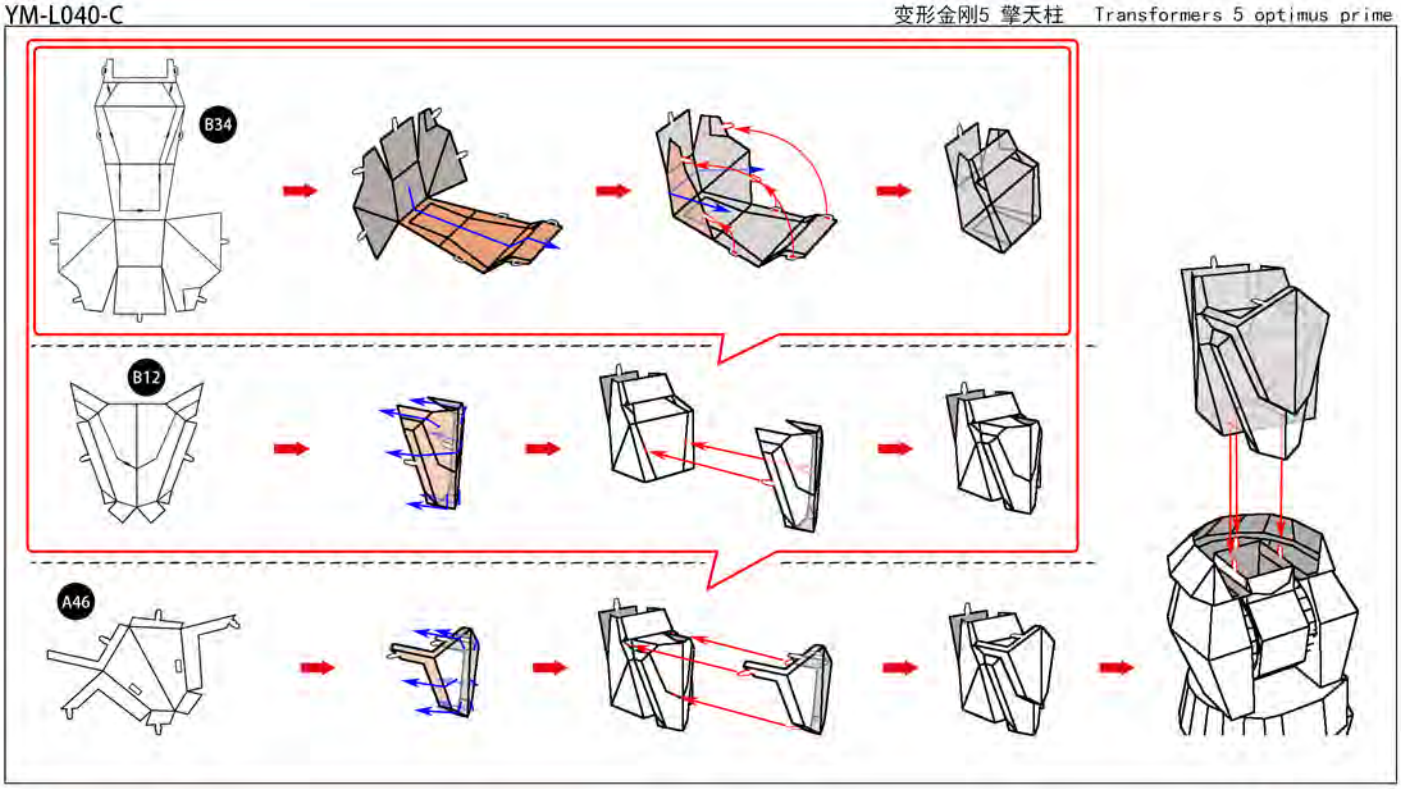
B34
B12
A46

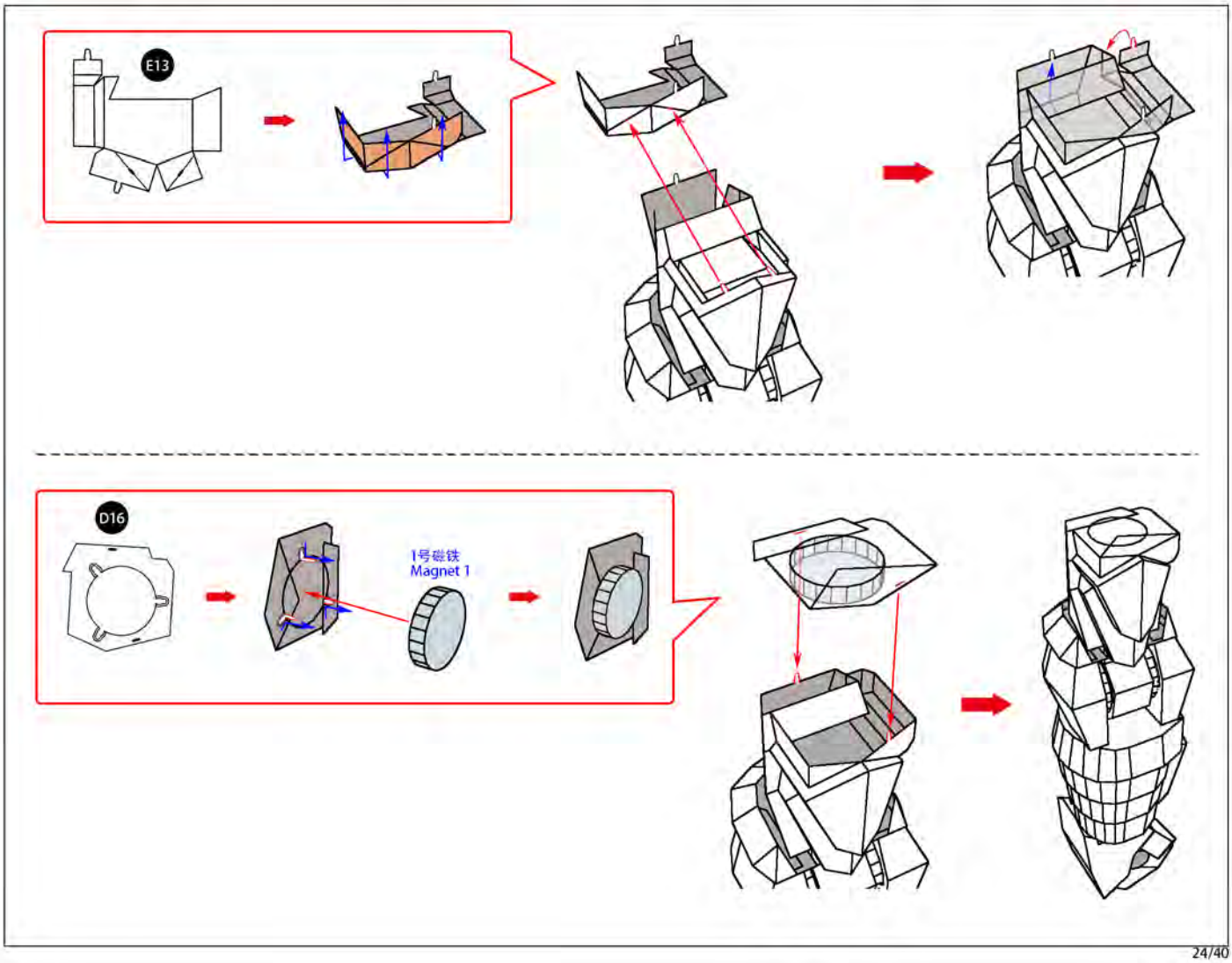
E13
D16
1号磁铁
Magnet 1

A31

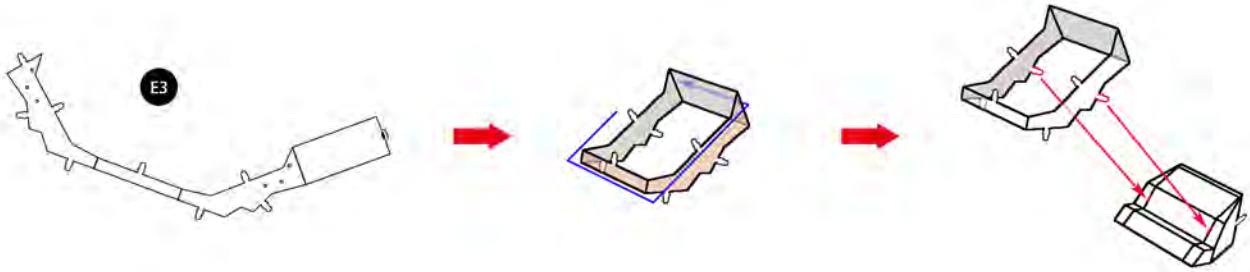
E3

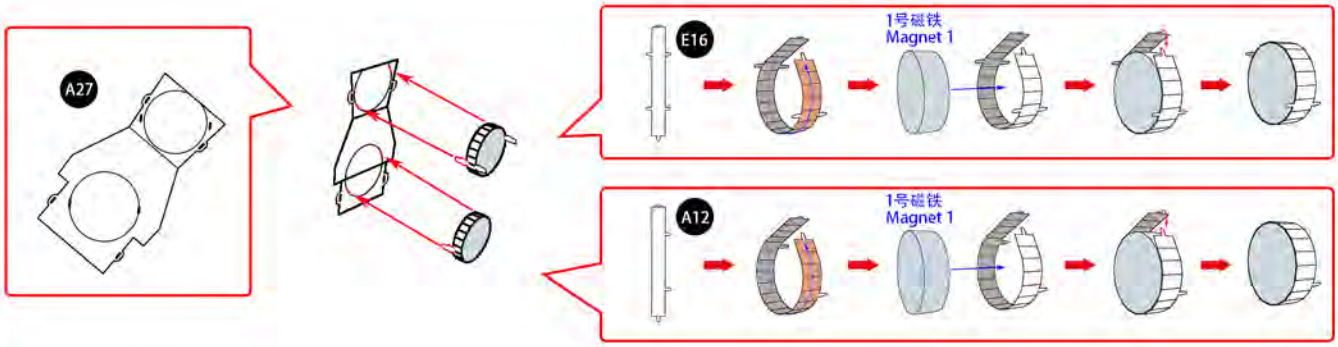
A27
E16
1号磁铁
Magnet 1
A12
1号磁铁
Magnet 1

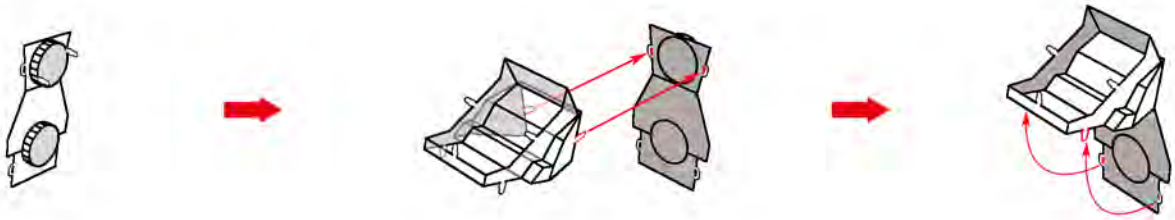

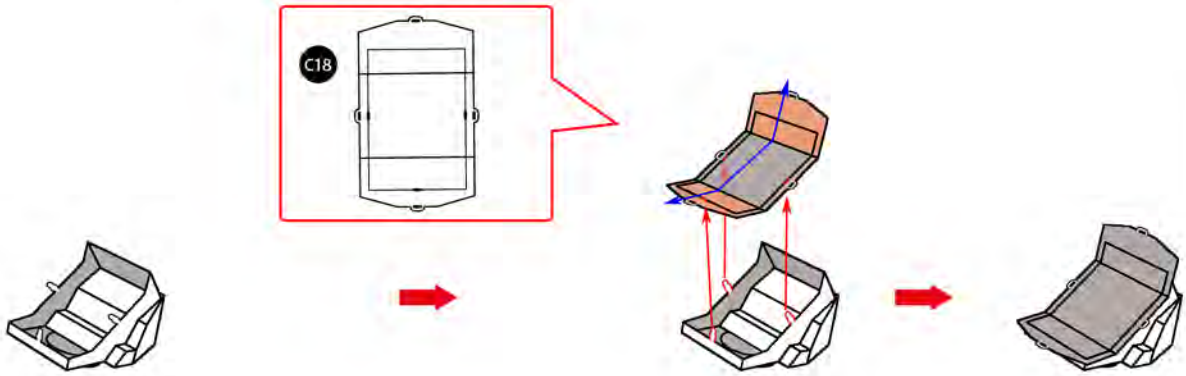
C18

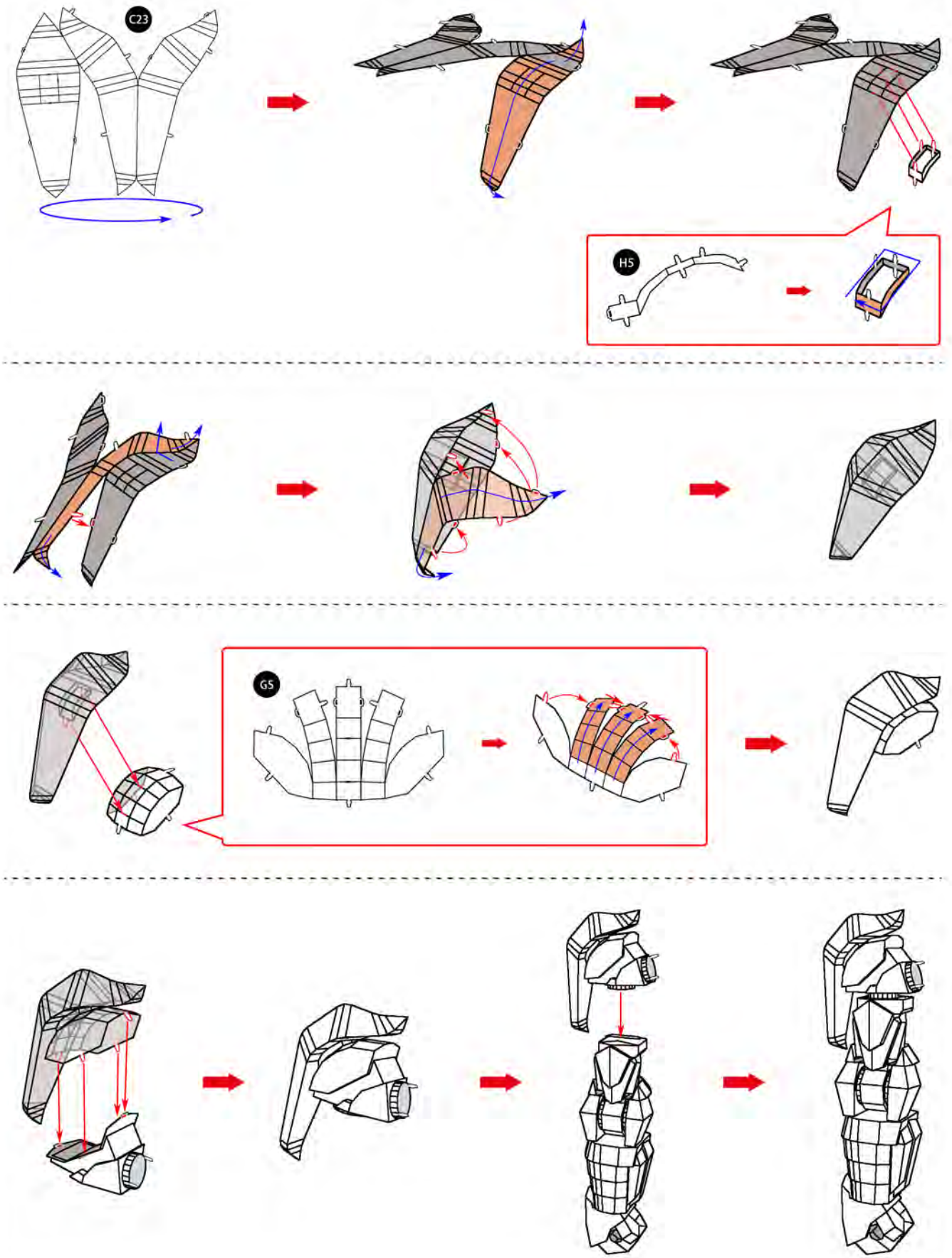
C23
H5
G5

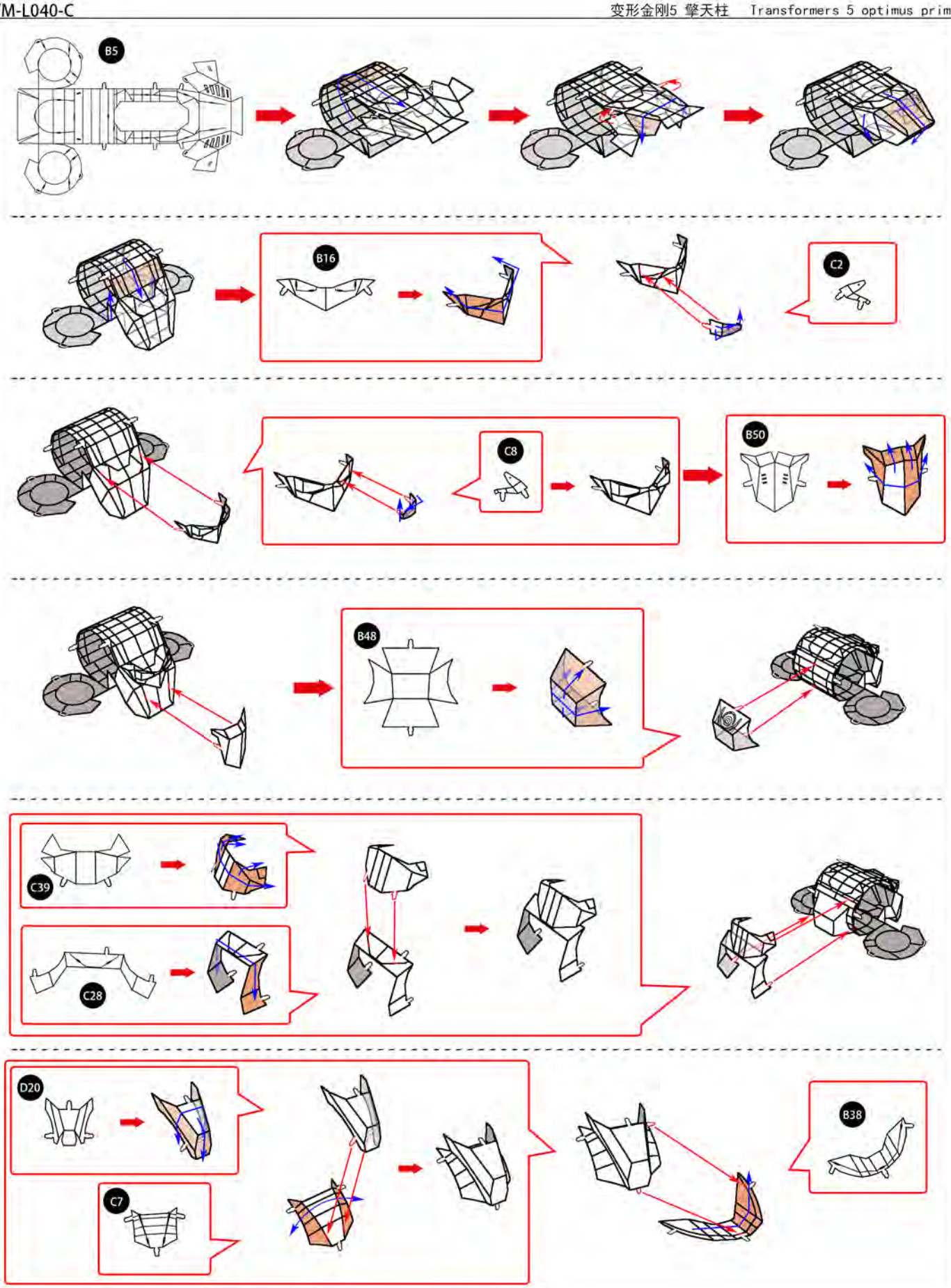
B5
B16
C2
C8
B50
B48
C39
C28
D20
C7
B38

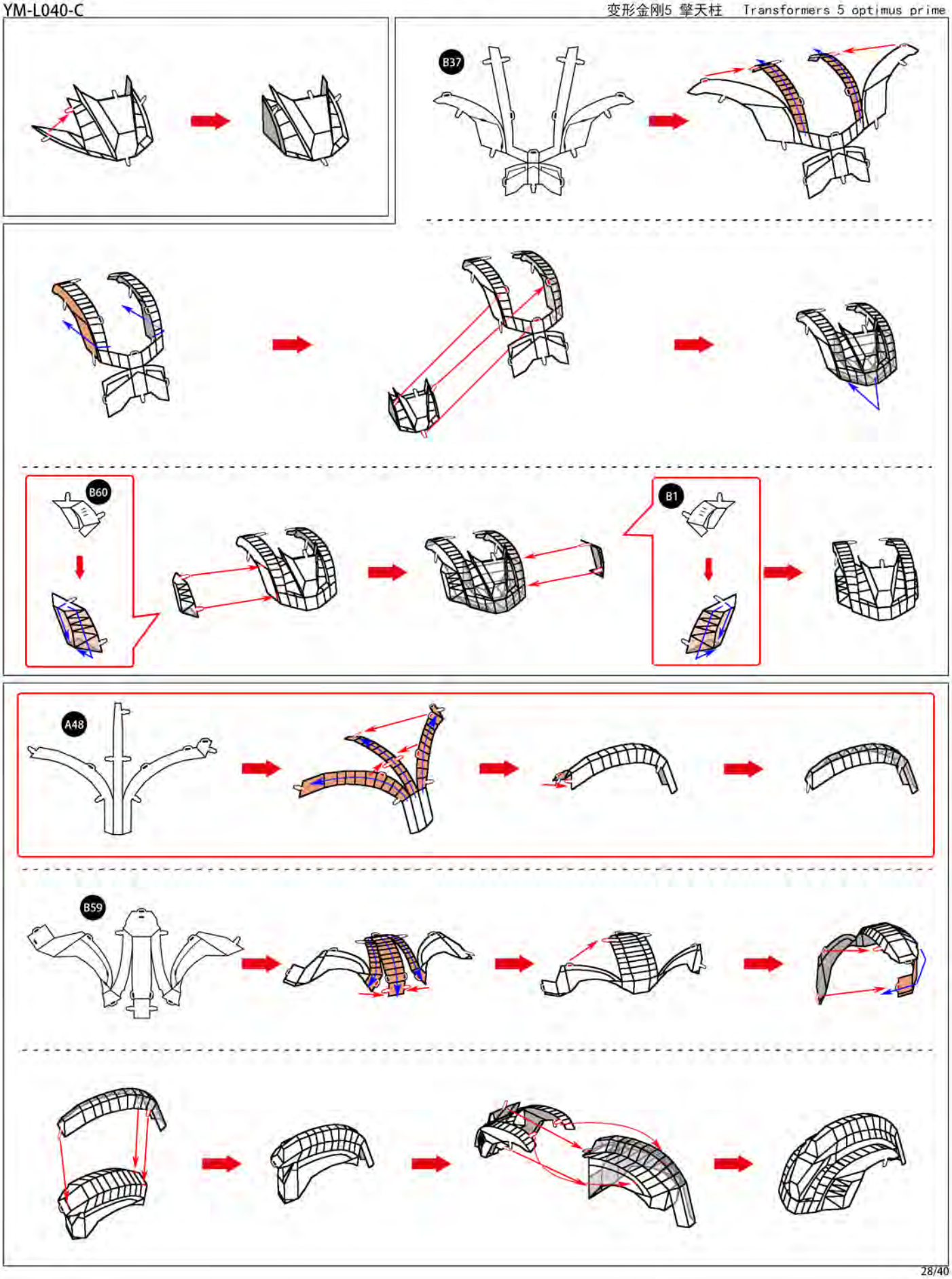
B37
B60
B1
A48
B59

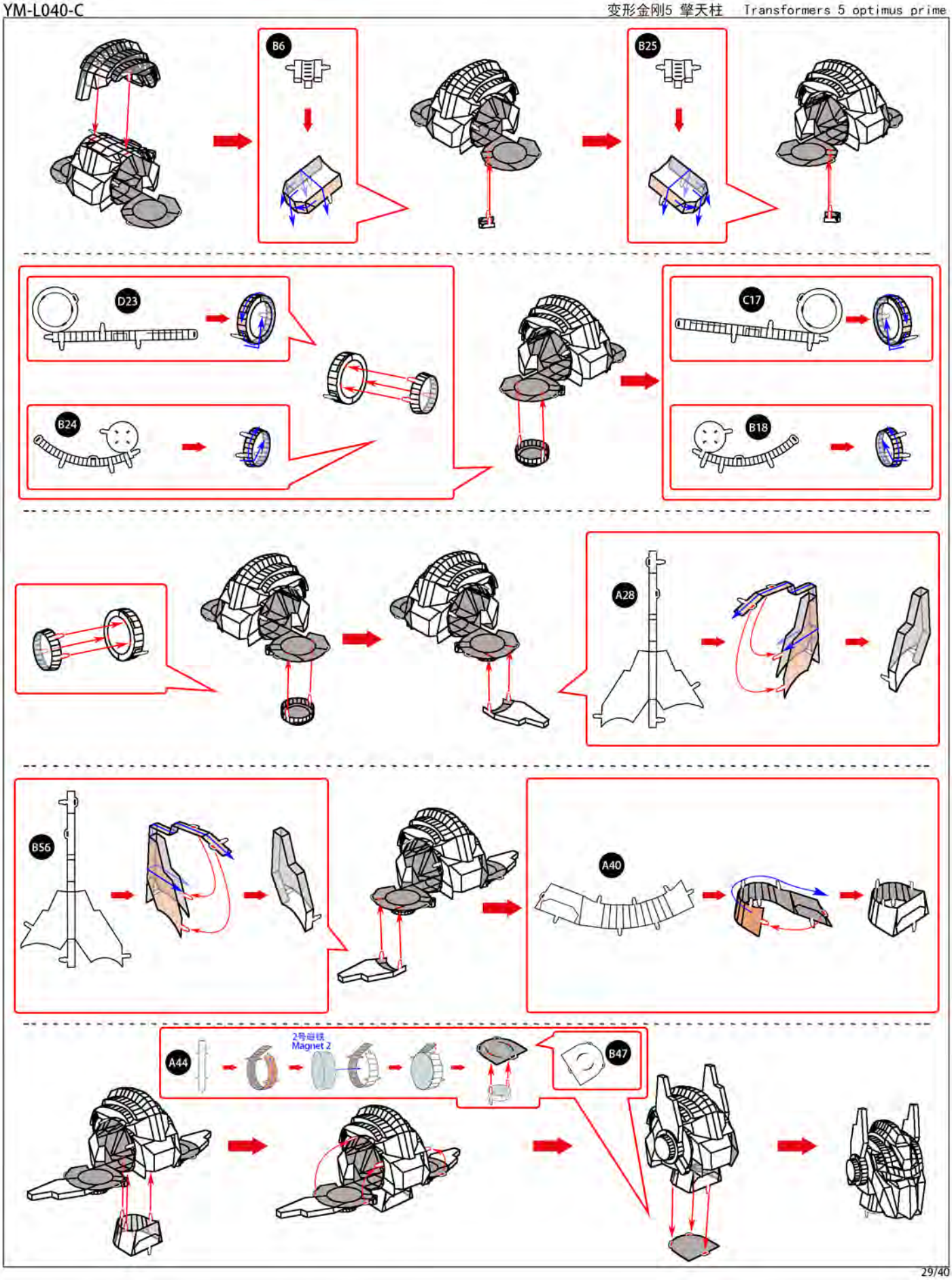
B6
B25
D23
B24
C17
B18
A28
B56
A40
A44
2号磁铁
Magnet 2
B47

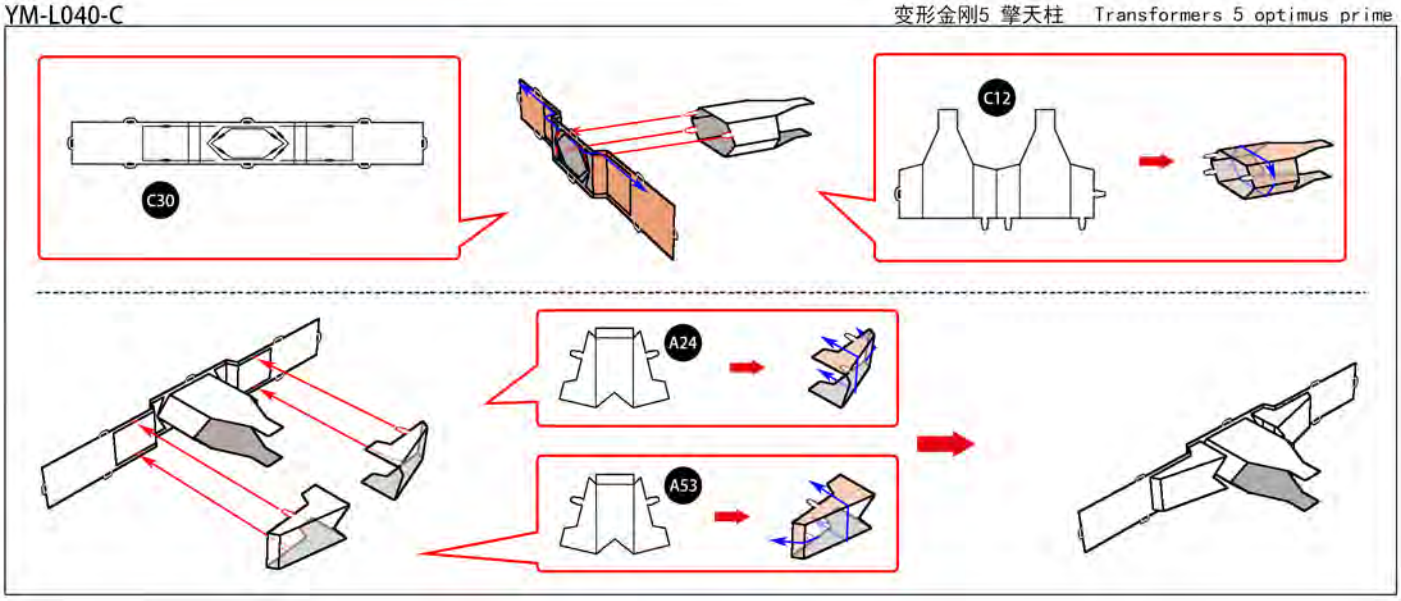
C30
C12
A24
A53

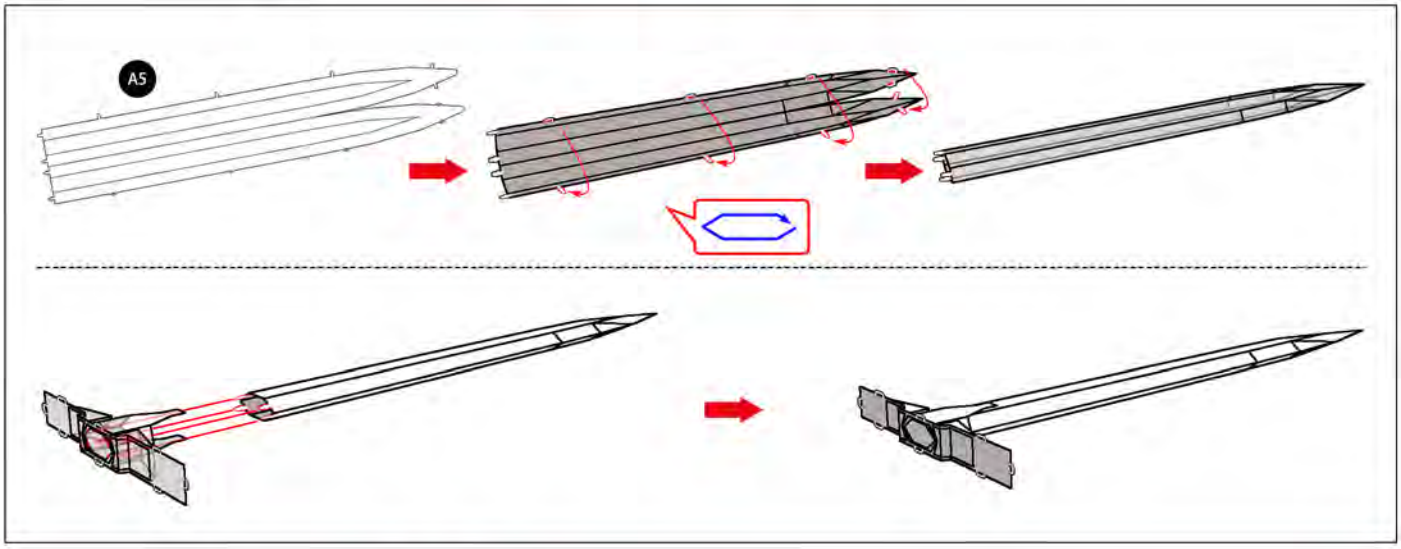
A5

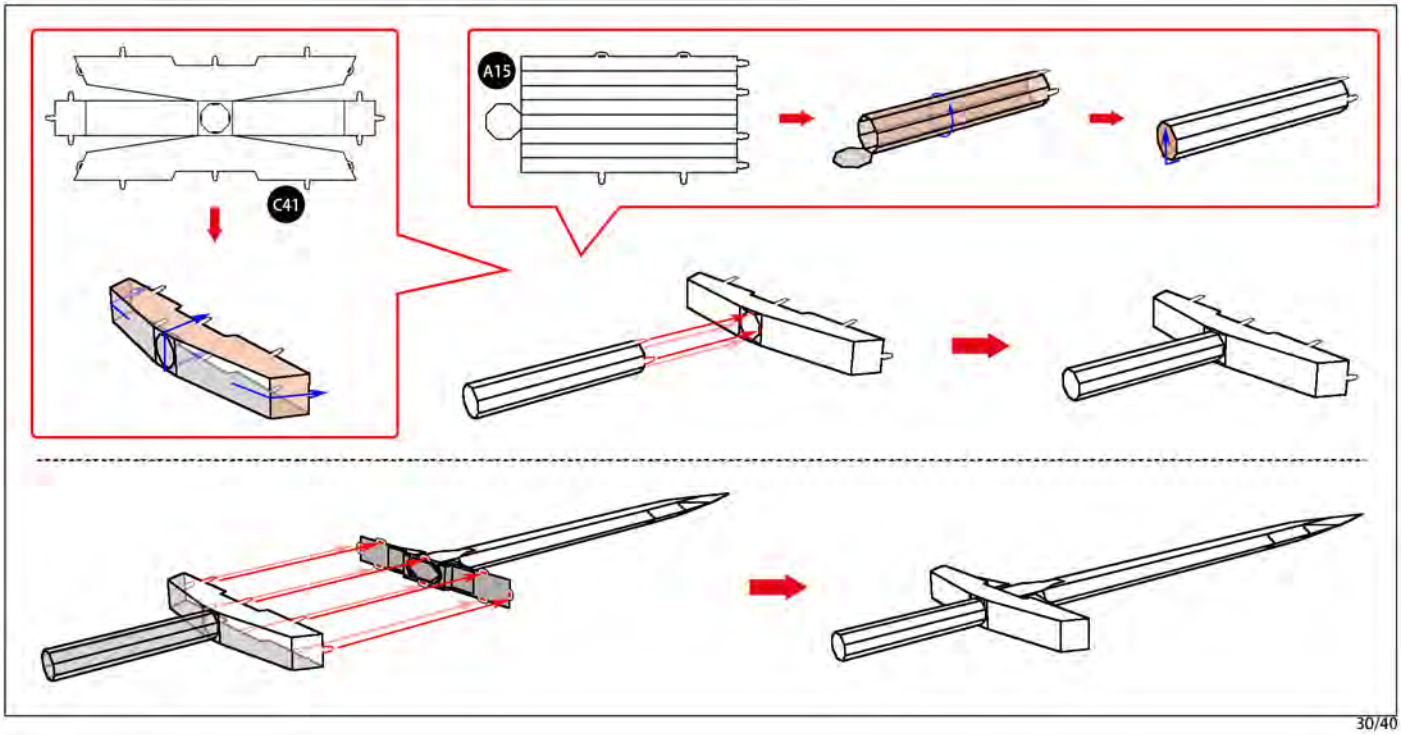
C41
A15

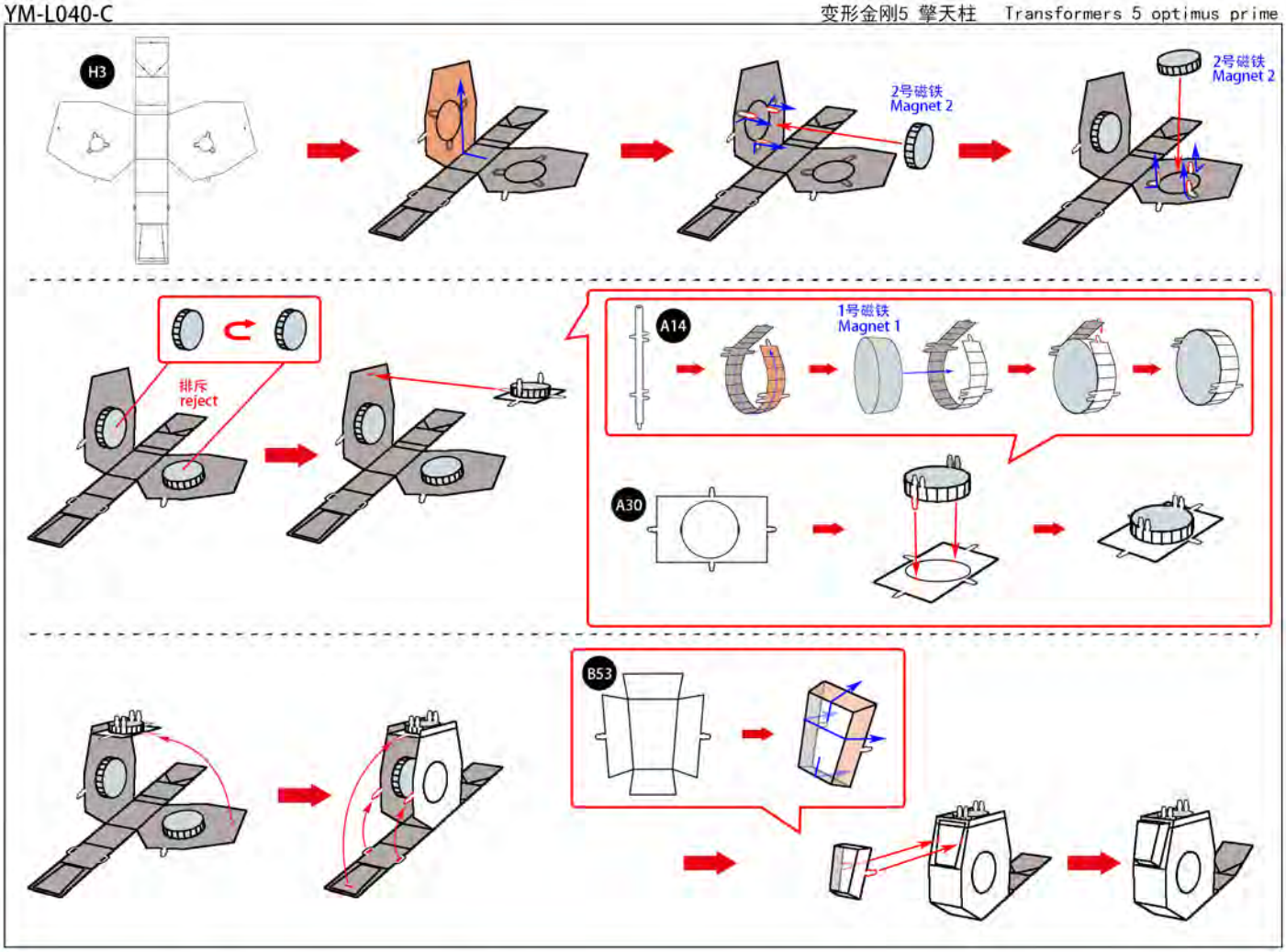
H3
2号磁铁
Magnet 2
2号磁铁
Magnet 2
排斥
reject
A14
1号磁铁
Magnet 1
A30
B53

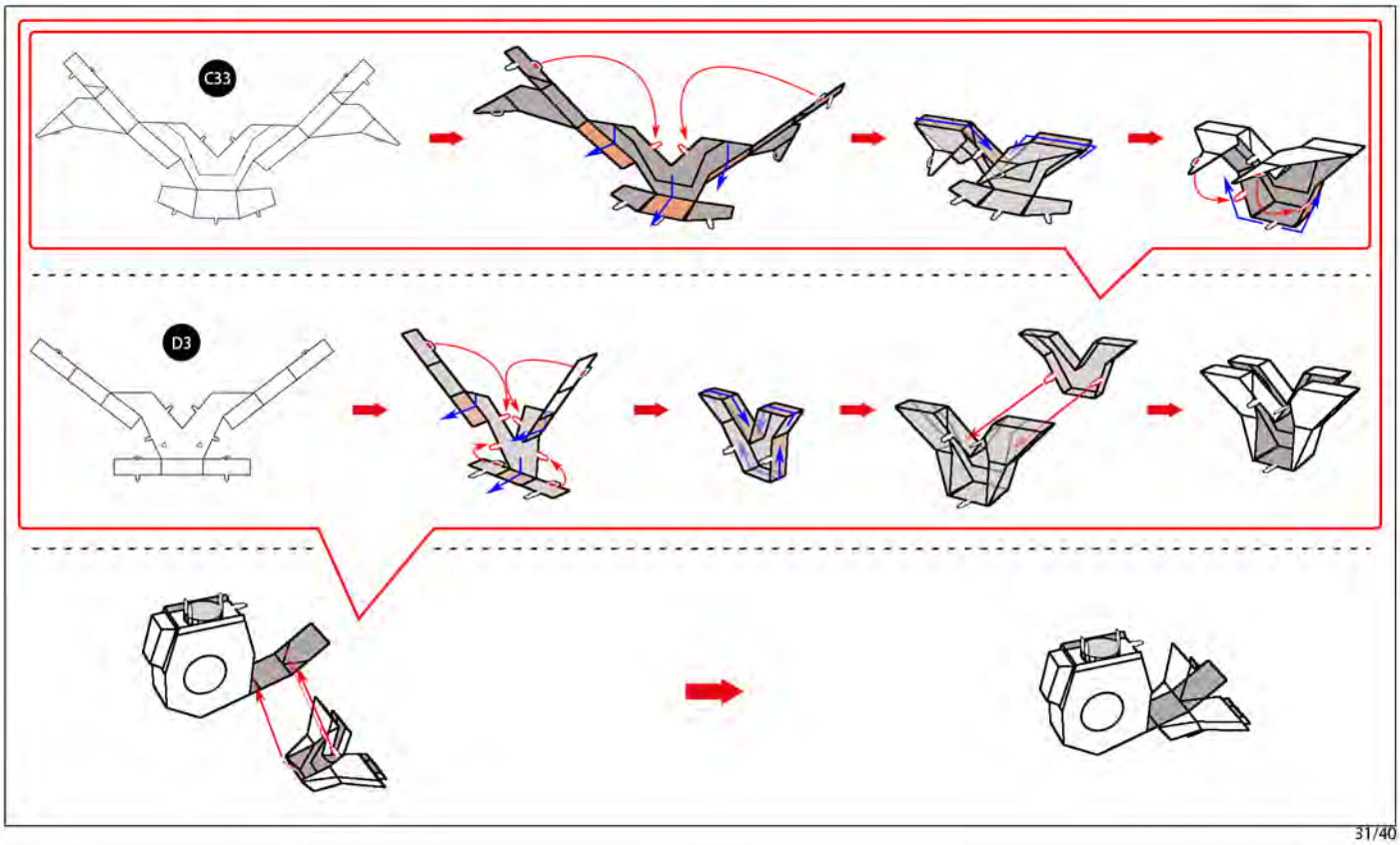
C33
D3

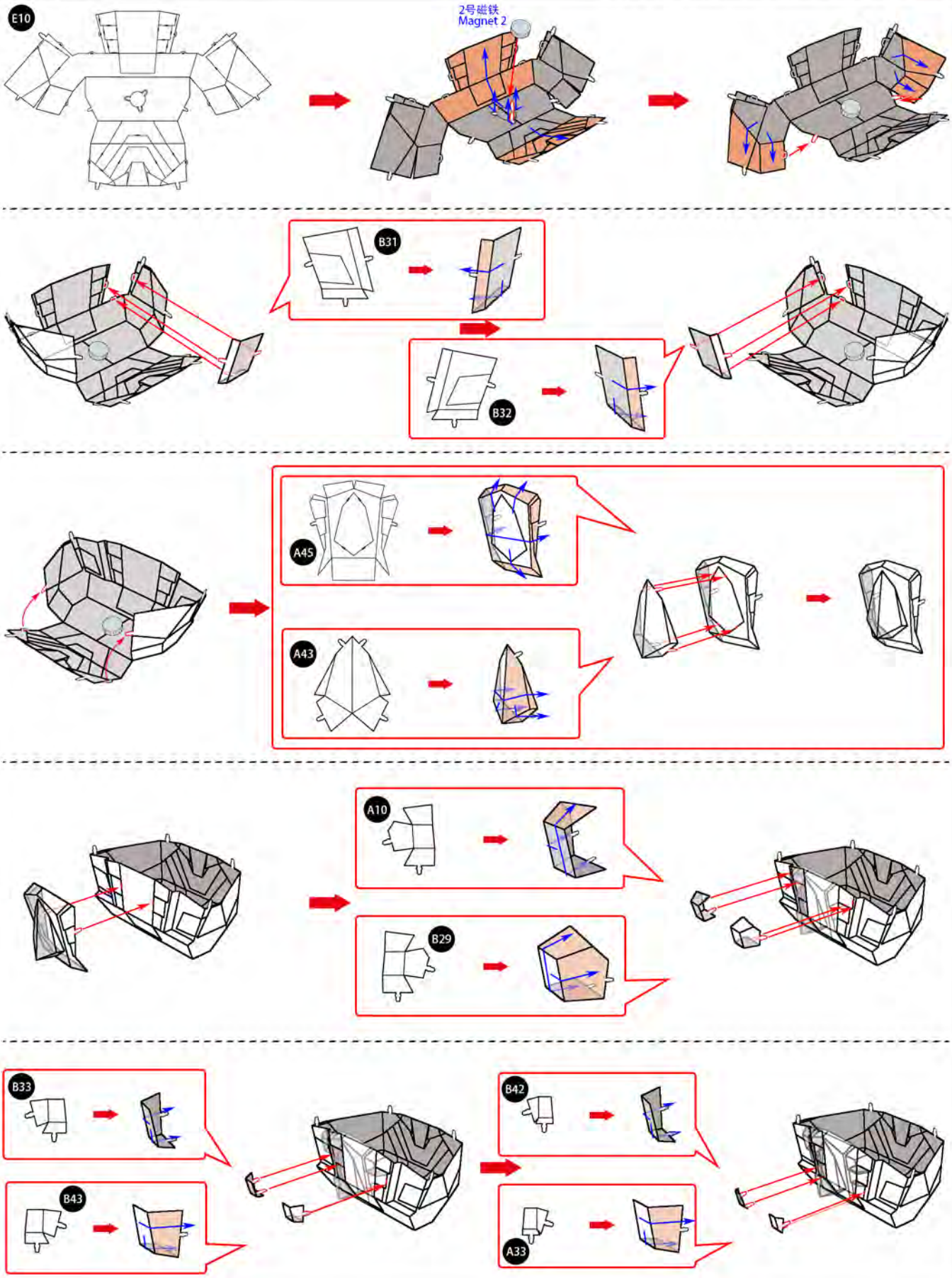
E10
2号磁铁
Magnet 2
B31
B32
A45
A43
A10
B29
B33
B43
B42
A33

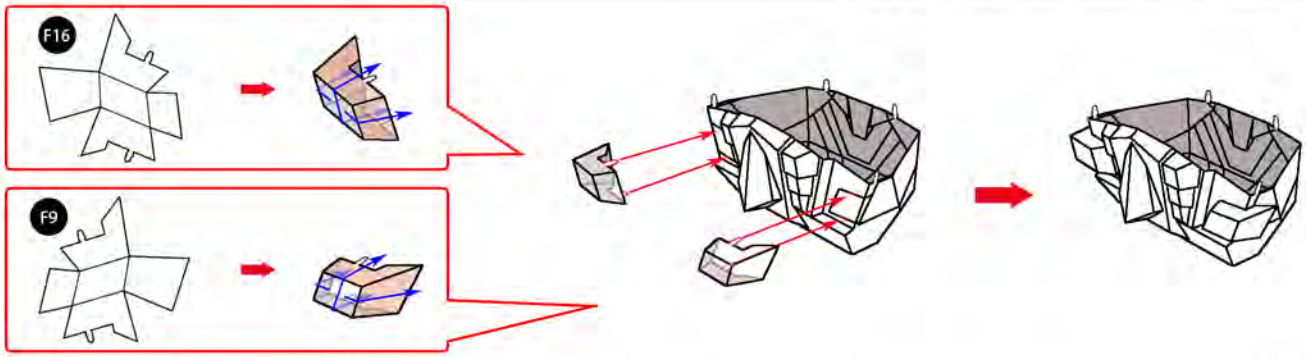
F16
F9

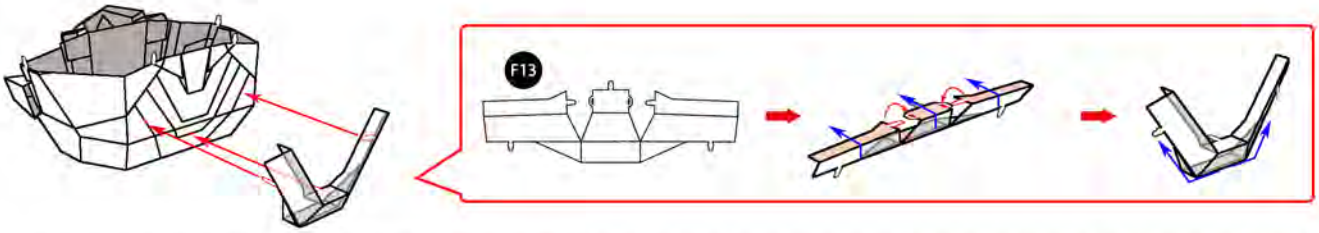
F13

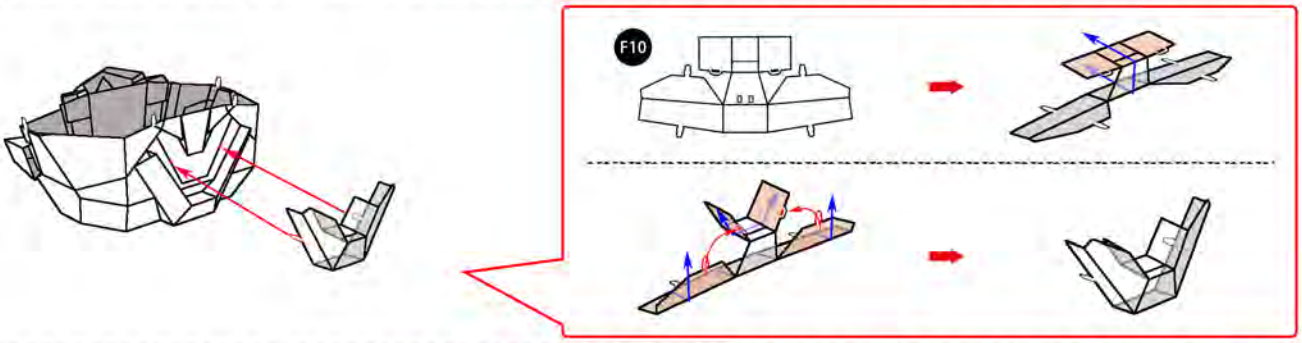
F10

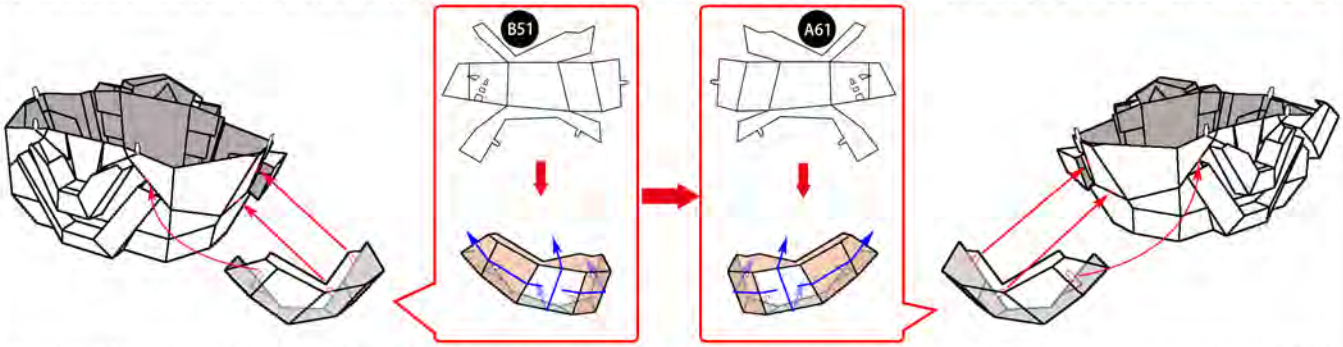
B51
A61

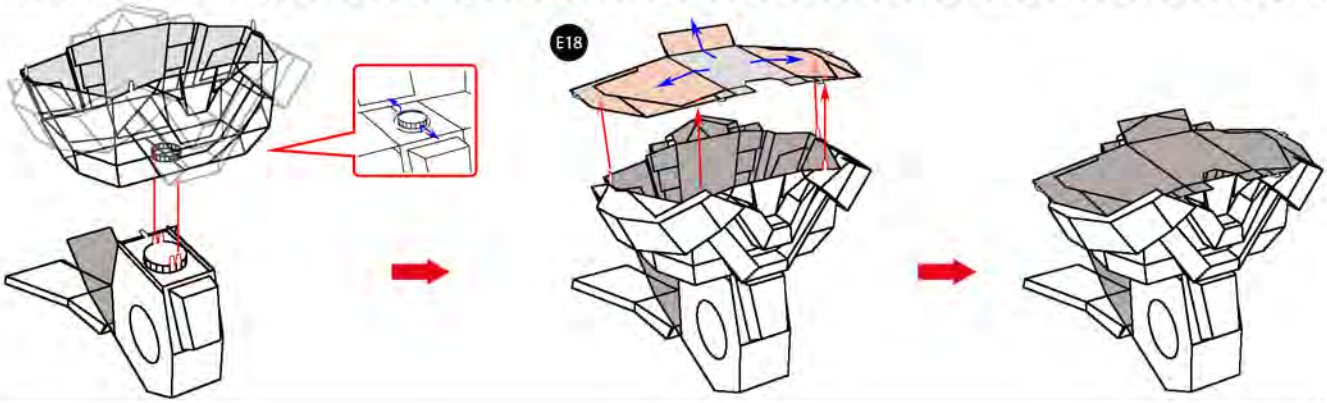
E18

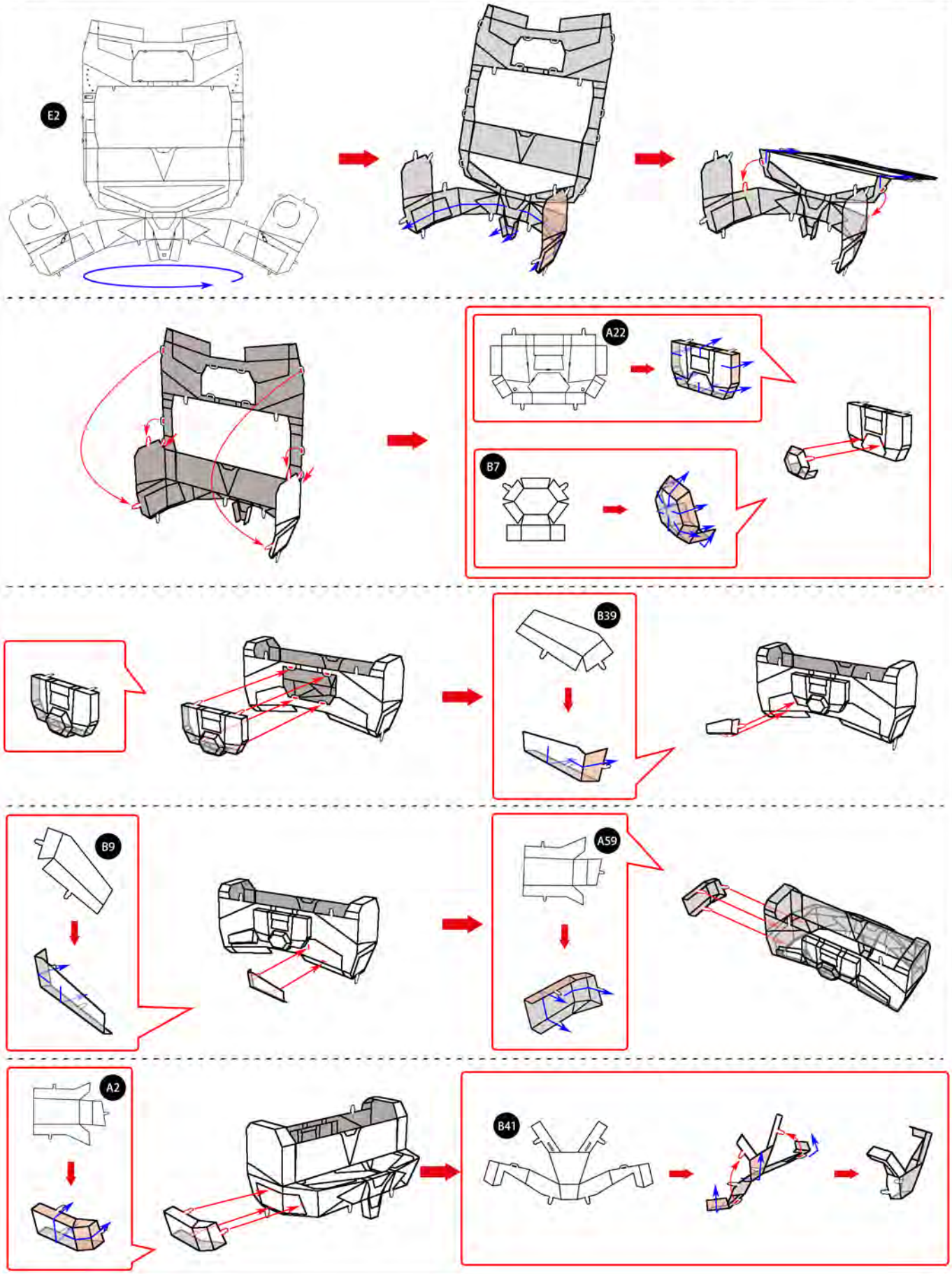
E2
A22
B7
B39
B9
A59
A2
B41

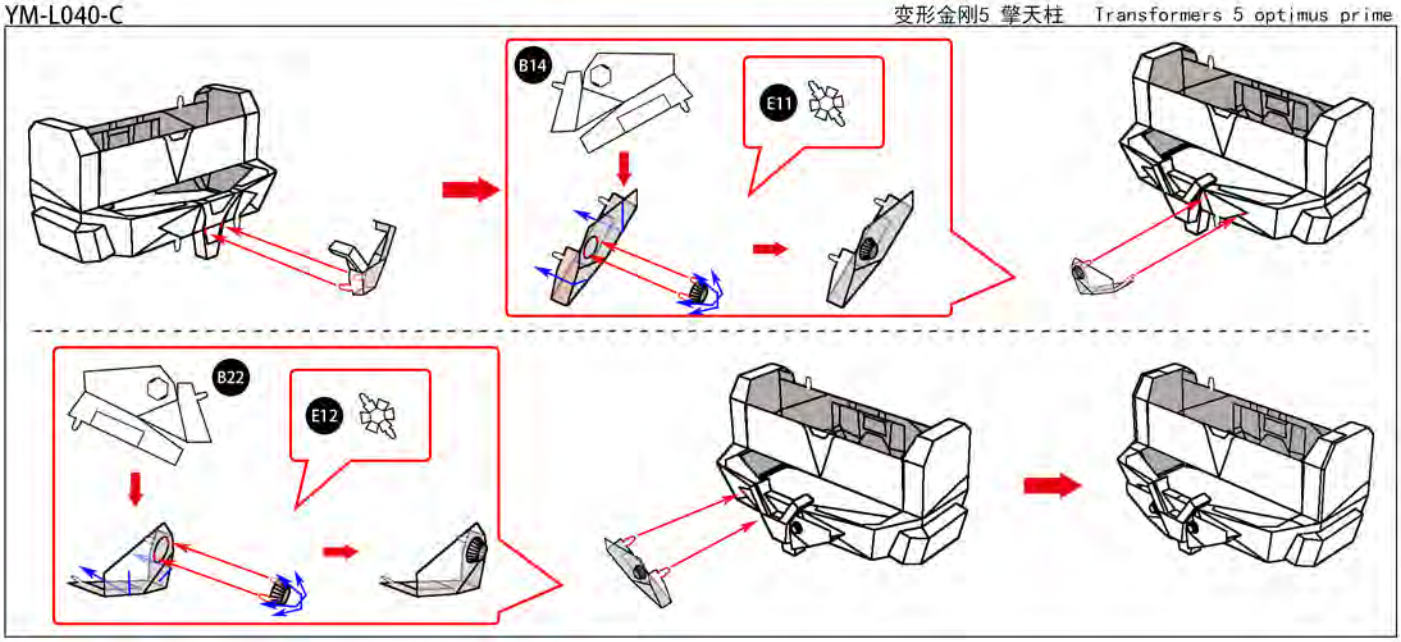
B14
E11
B22
E12

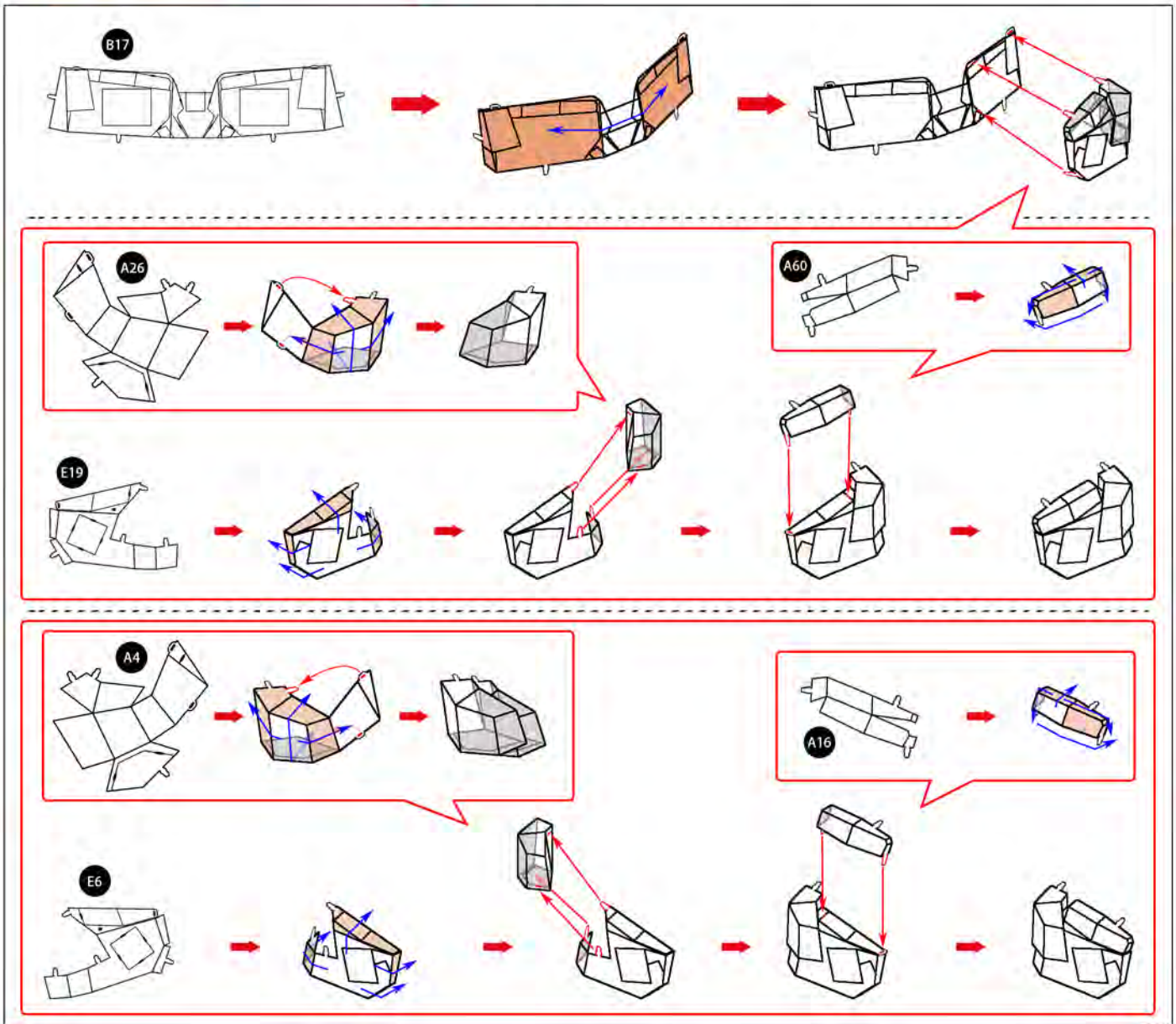
B17
A26
A60
E19
A4
A16
E6

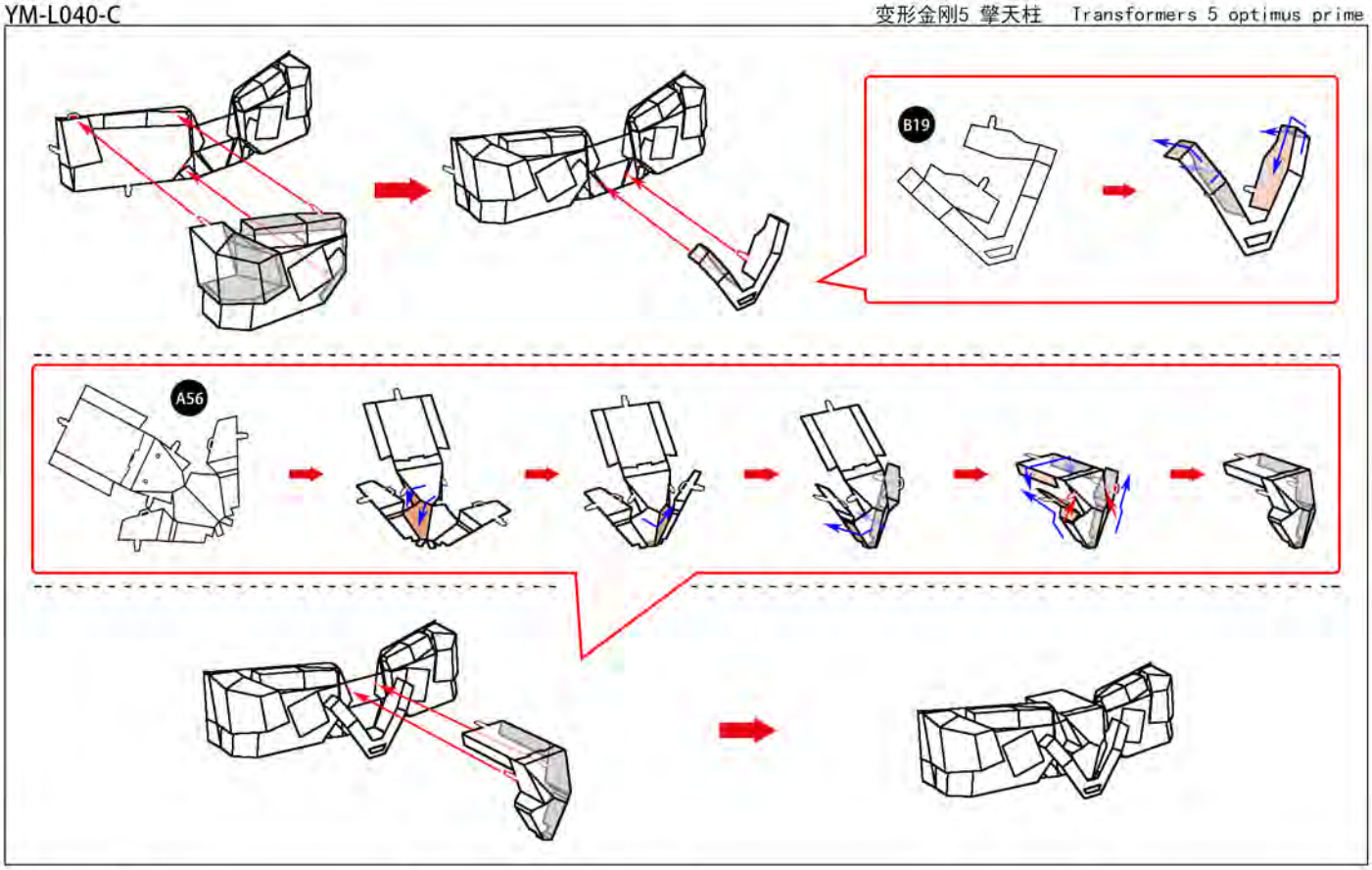
B19
A56

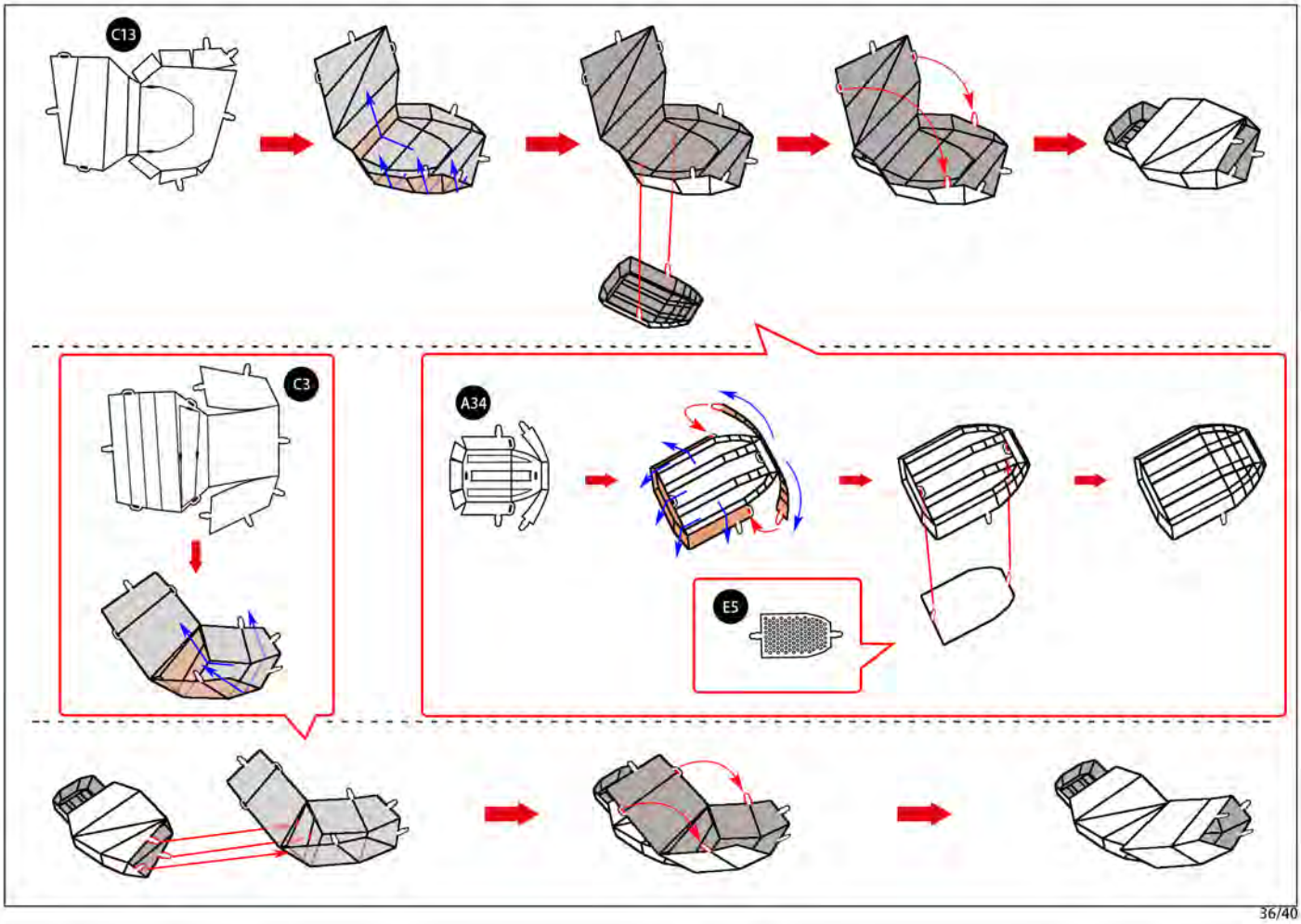
C13
C3
A34
E5

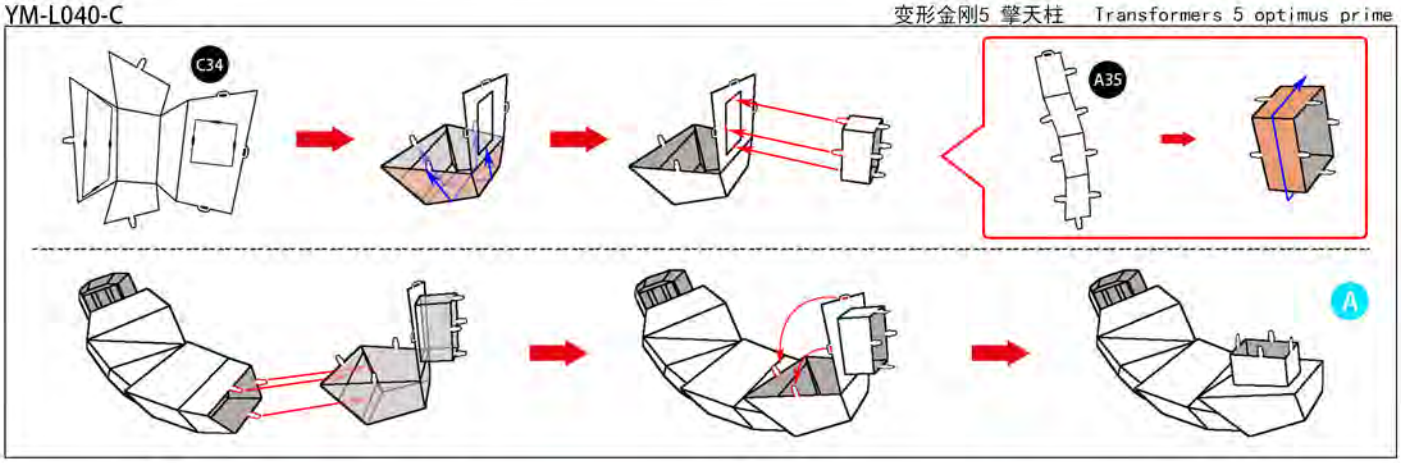
C34
A35
A

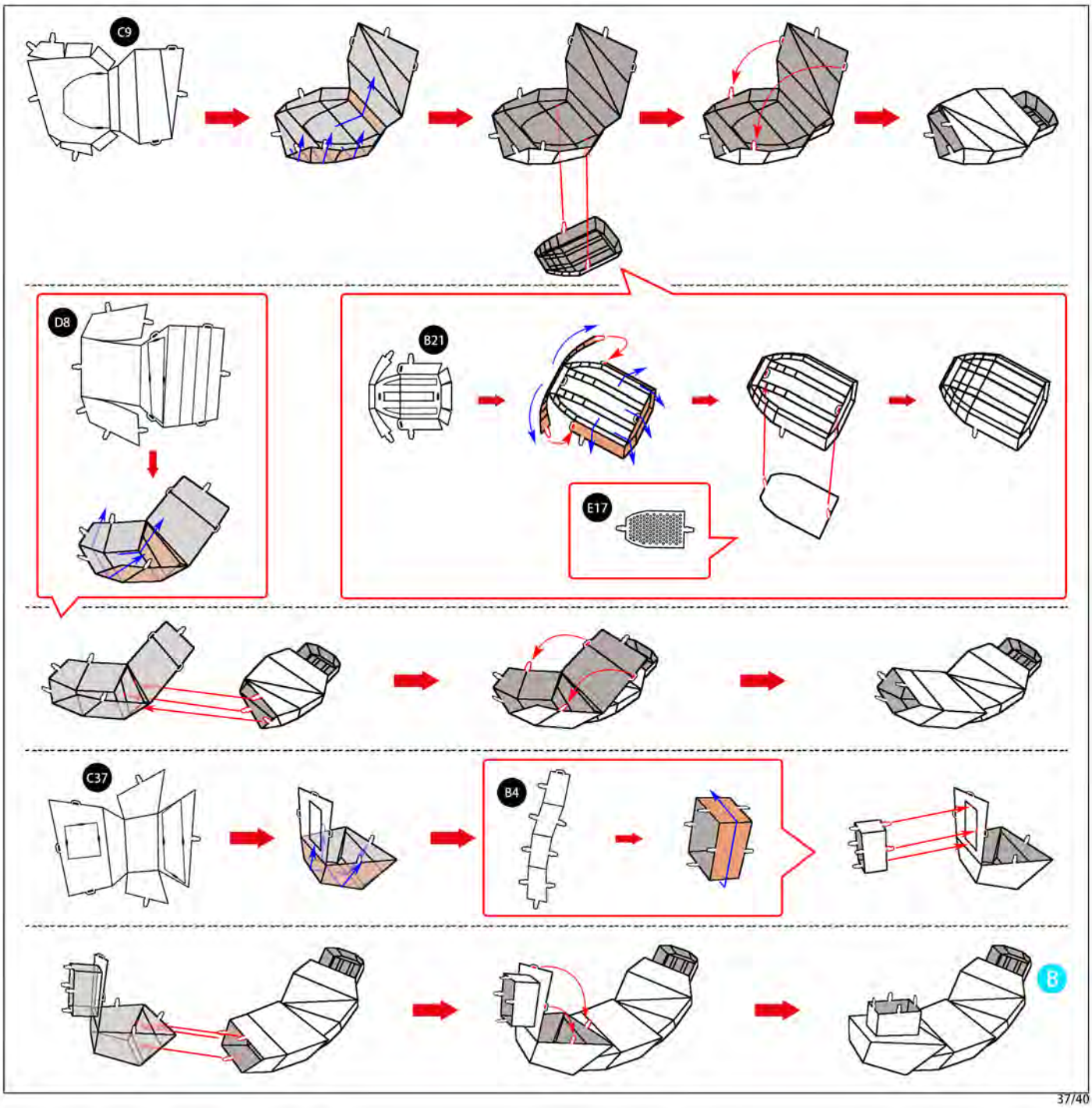
C9
D8
B21
E17
C37
B4
B

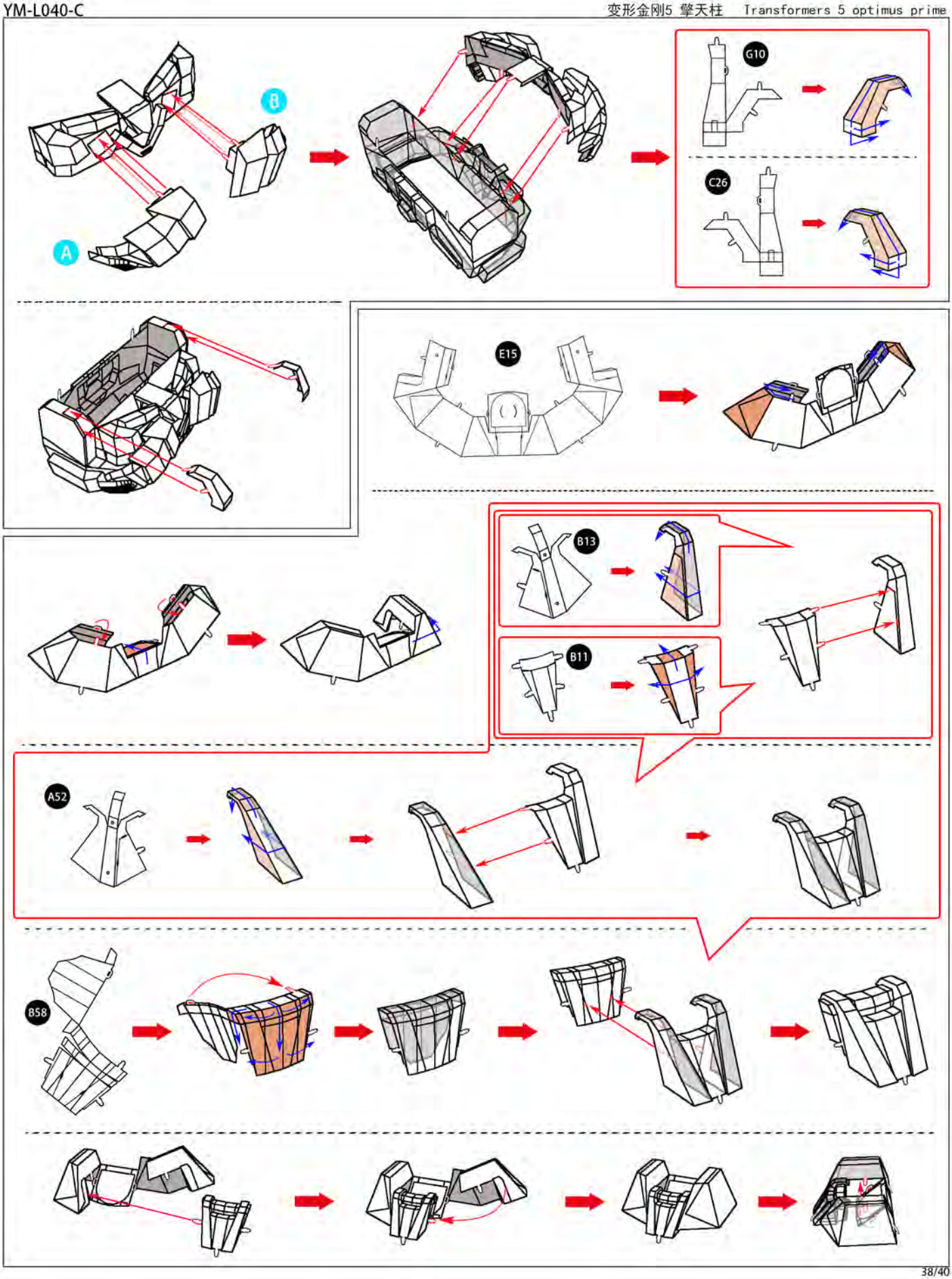
B
A
G10
C26
E15
B13
B11
A52
B58

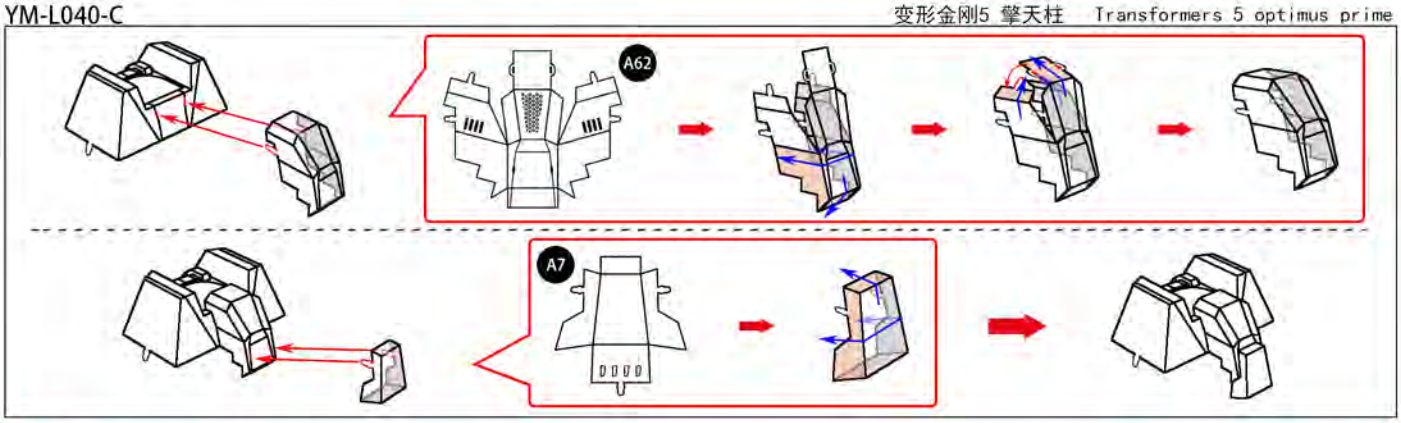
A62
A7

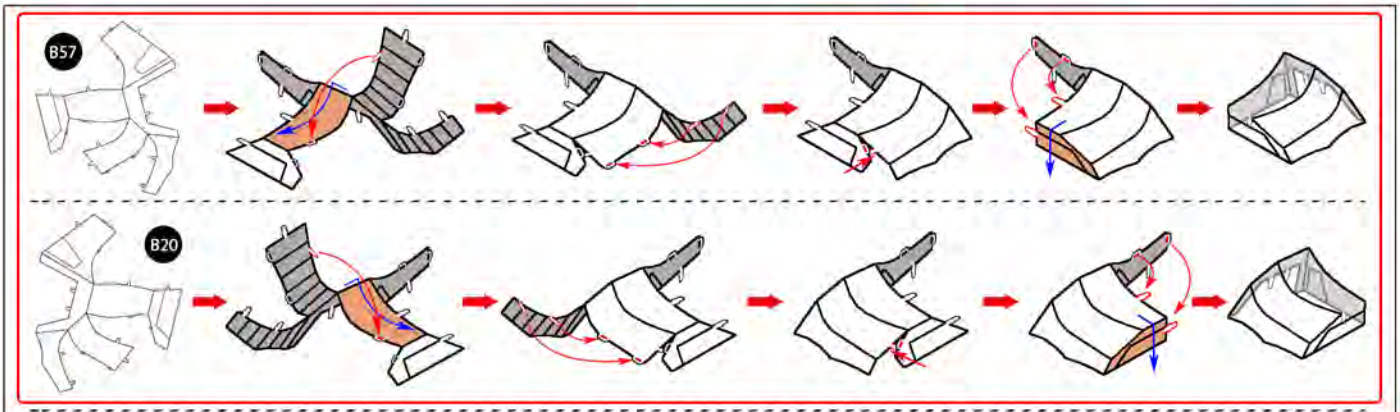
B57
B20

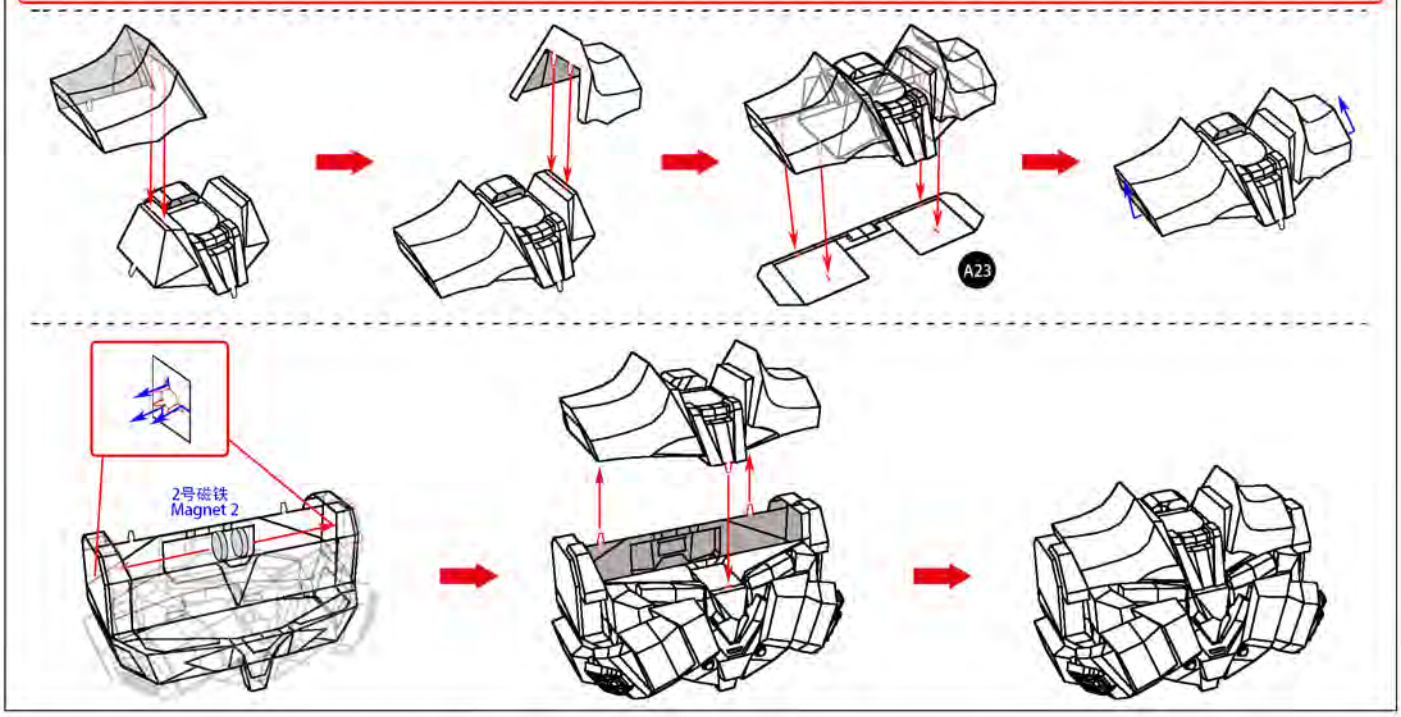
A23
2号磁铁
Magnet 2

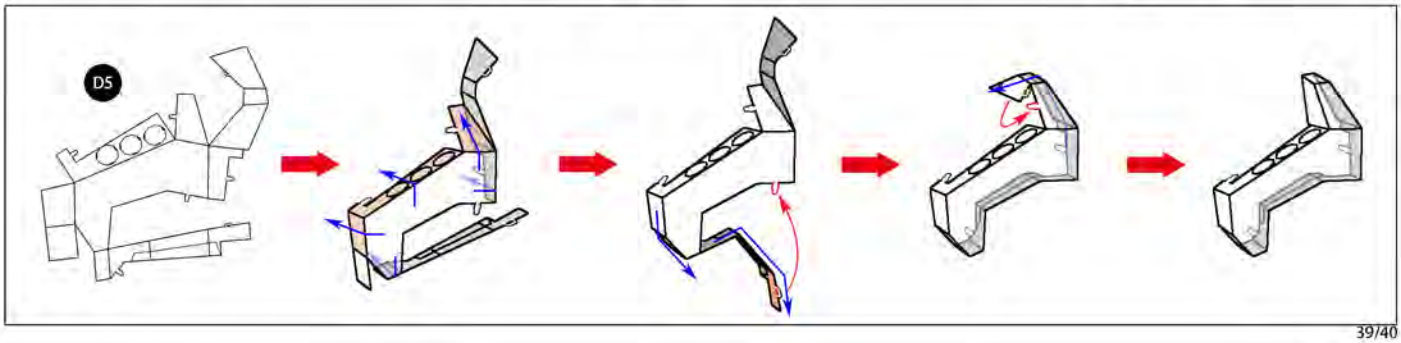
D5

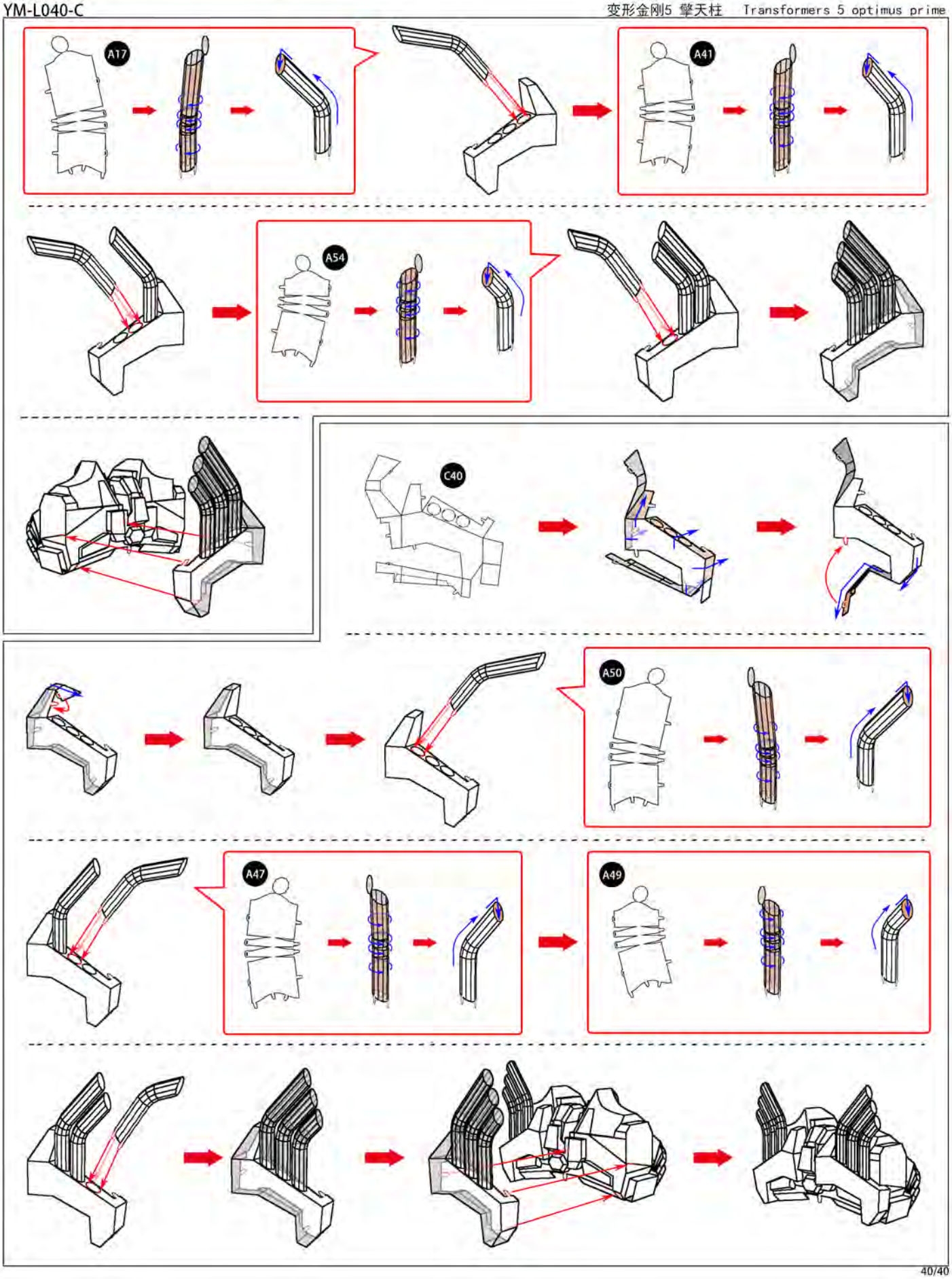
A17
A41
A54
C40
A50
A47
A49

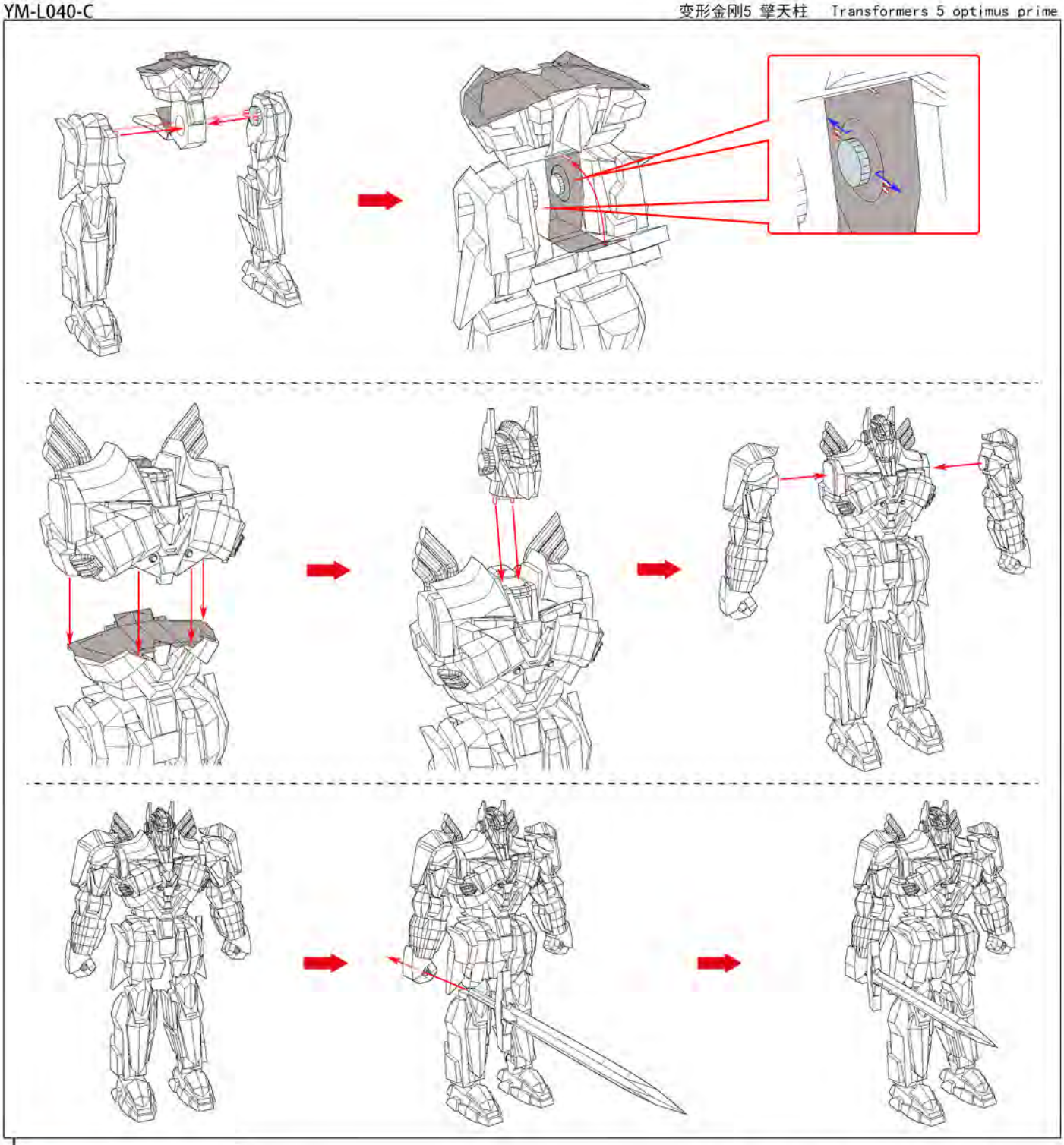

MU 艺模
MU art model
扫码加入微信公众号 解锁更多模型
Scan the two-dimensional code
to join us and unlock more models.
上海艺模电子科技有限公司
Shanghai Art Model Electronic
Science and Technology Co., Ltd.

电话：021-58942999
Tel:021-58942999
公司主页：www.maplemu.com
Website:www.maplemu.com

Design by: 图腾 TEMI
REMEMBER
昔日永恒

关注我们
focus on us

擎天柱

YM-L040-C

Licensed By:

HASBRO and its logo and TRANSFORMERS,the logo and all related characters are trademarks of Hasbro and used with permission.
© 2017 Hasbro.All Rights Reserved.