TRANSFORMER
TRANSFORMER
TRANSFORMER
TRANSFORMER
TRANSFORMER
TRANSFORMER
TRANSFORMER
TRANSFORMER
TRANSFORMER
TRANSFORMER
TRANSFORMER
TRANSFORMER
TRANSFORMERS
THE LAST KNIGHT
大黄蜂
BUMBLEBEE
YM-L045-C

成品示意图 360° VIEW PICTURE

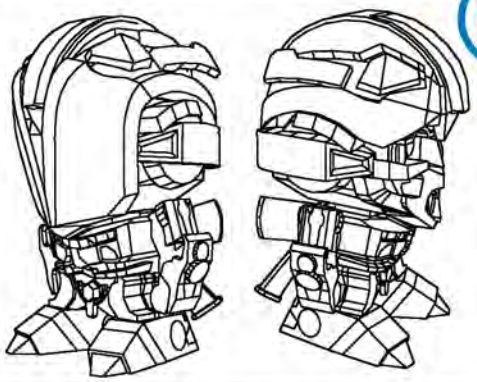

大黄蜂两头身
Transformers 5-bumblebee

组装基本步骤示意图 BASIC ASSEMBLING STEPS

固定方式一:
将卡扣穿过对应固定孔,
按对应角度曲折（图一）
Fitting method 1:
put the tab in the slot,
bend properly(p1)

固定方式二:
将卡扣穿过对应固定孔,
用钳子类工具垂直扭曲固定卡扣（图二）
Fitting method 2:
put the tab in the slot,
bend the tab vertically
with plier(p2).

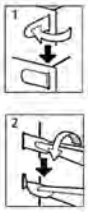

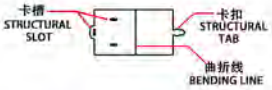

折弯面
Bending surface

非纹理面
Non textured surface

⚠ 注意拼装前带手指套
Take finger cots before assembly

⚠ 优先拼装
First to assembly

此产品两个头一个身体，通过换头部有两种不同的观赏
This product has two heads and one body. It has two different views by changing its head

金属部件A METAL SHEET A

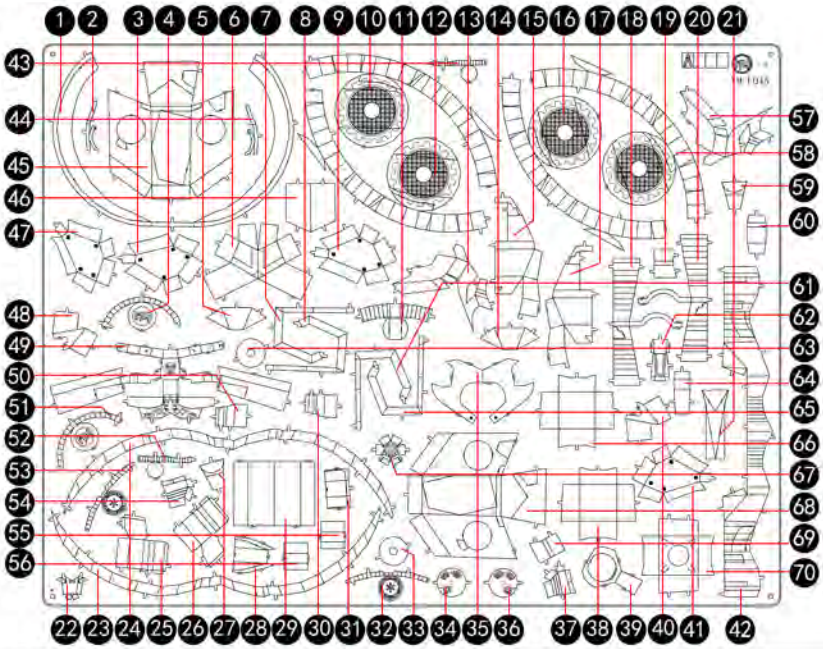

金属部件B METAL SHEET B

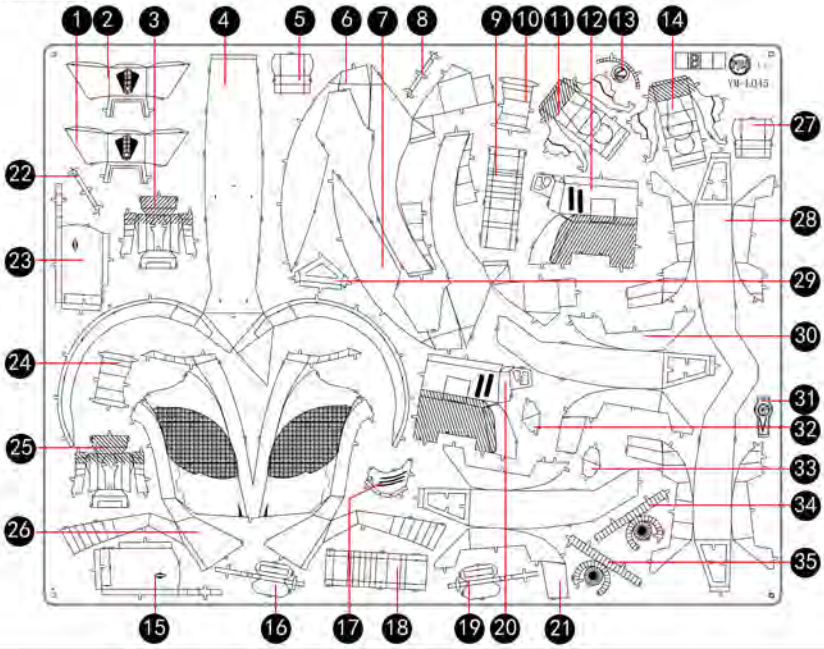

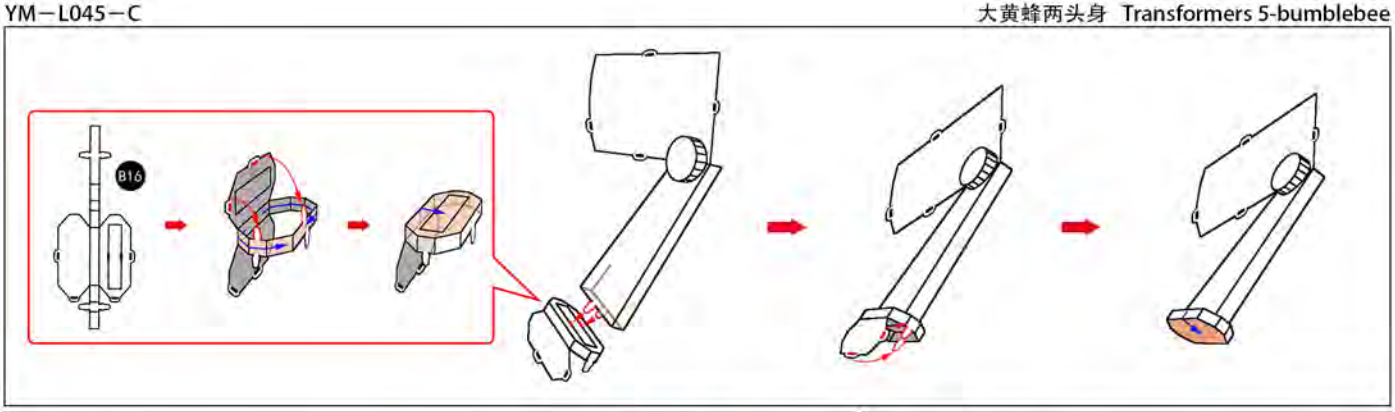
B16

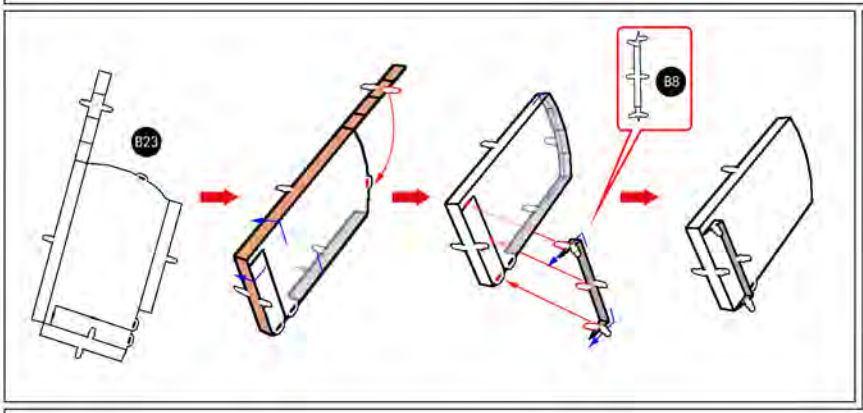
B23
B8

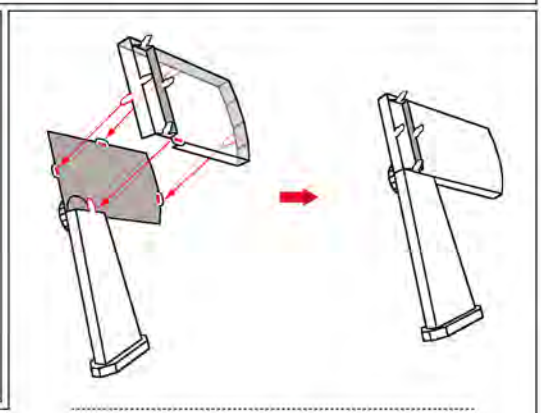

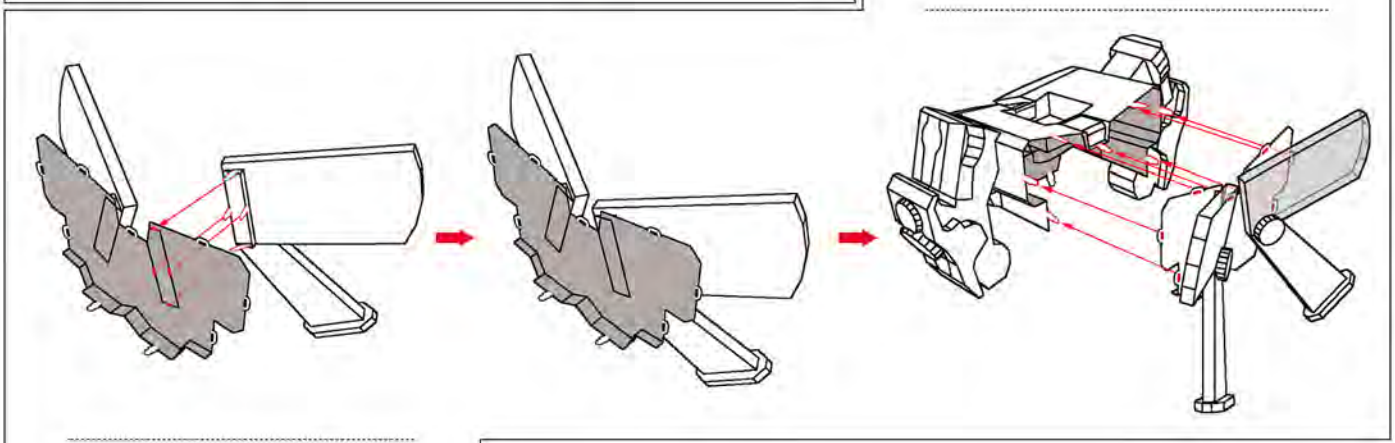

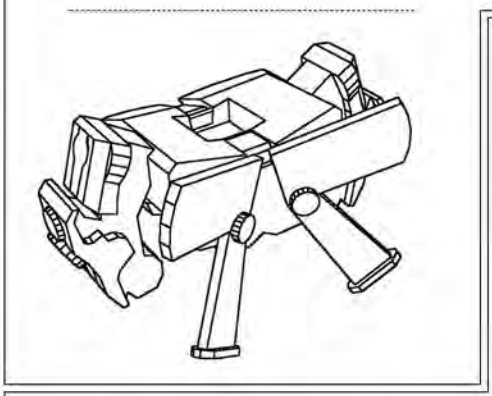

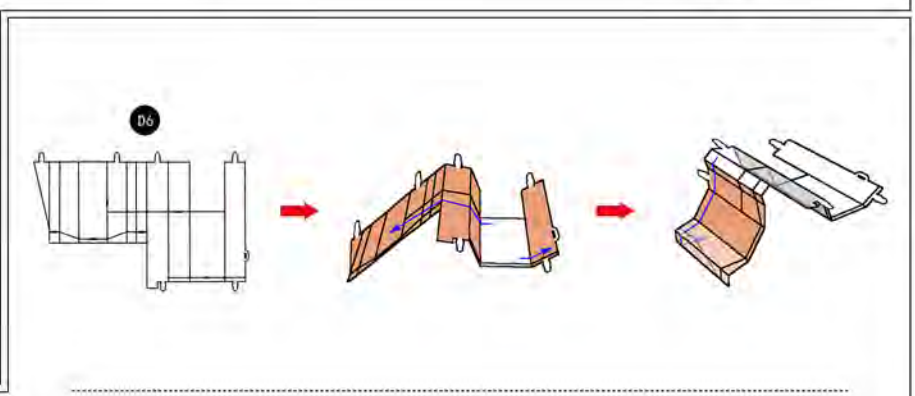
D6

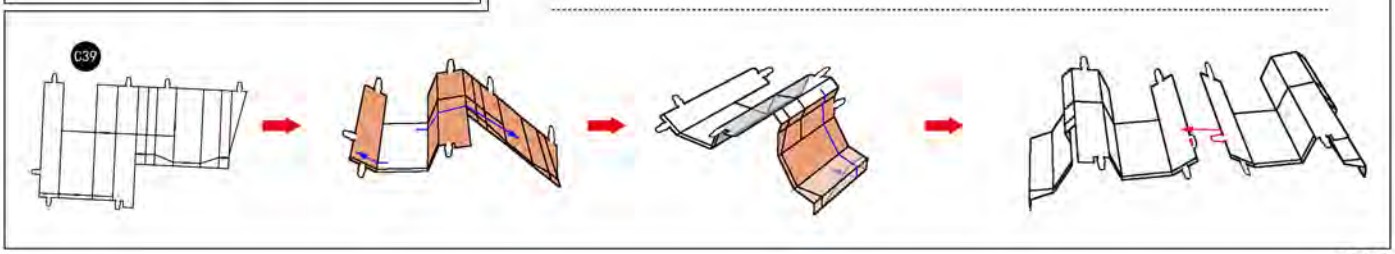
C39

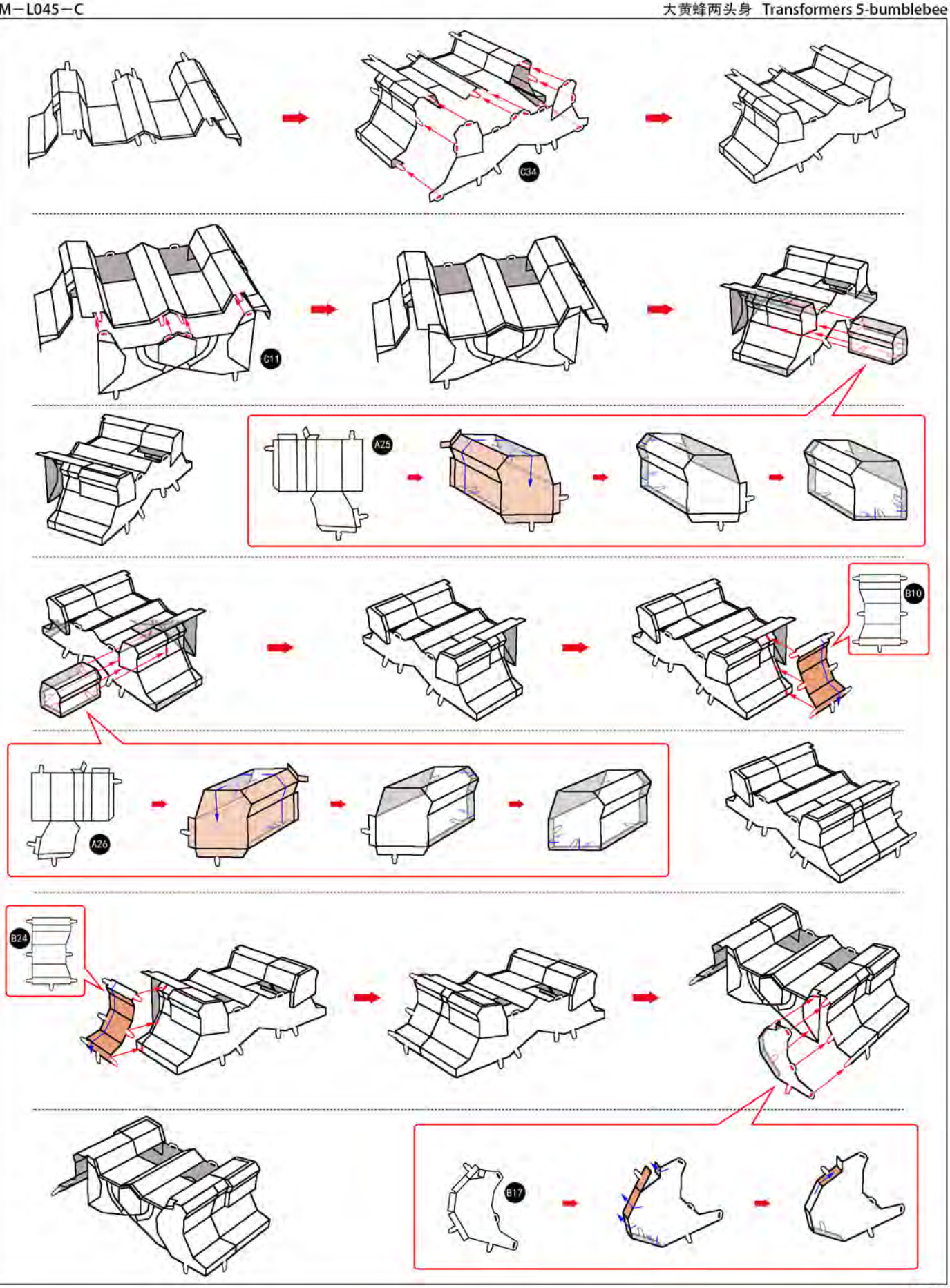
C34
C11
A25
B10
A26
B24
B17

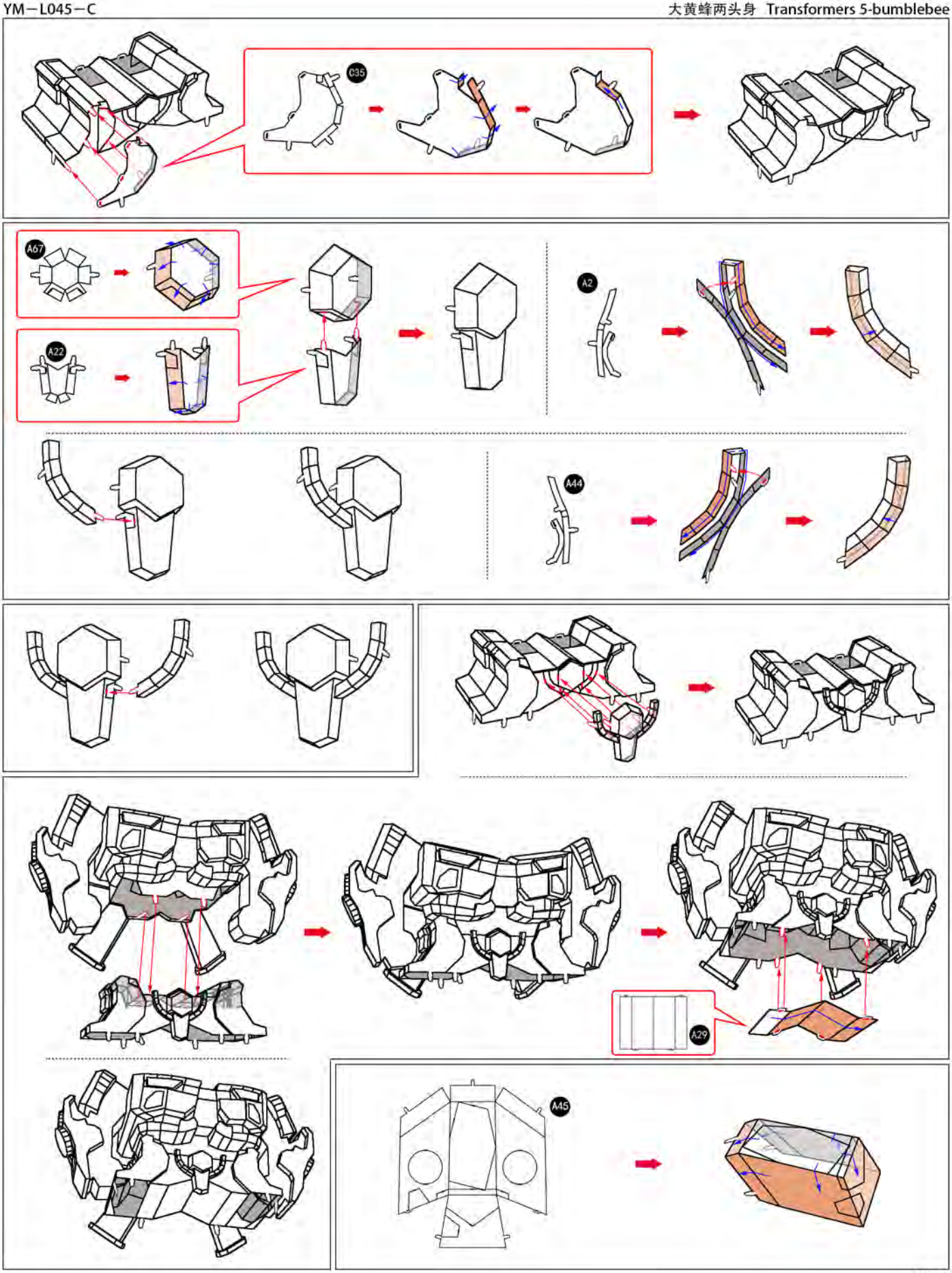
G35
A67
A22
A2
A44
A29
A45

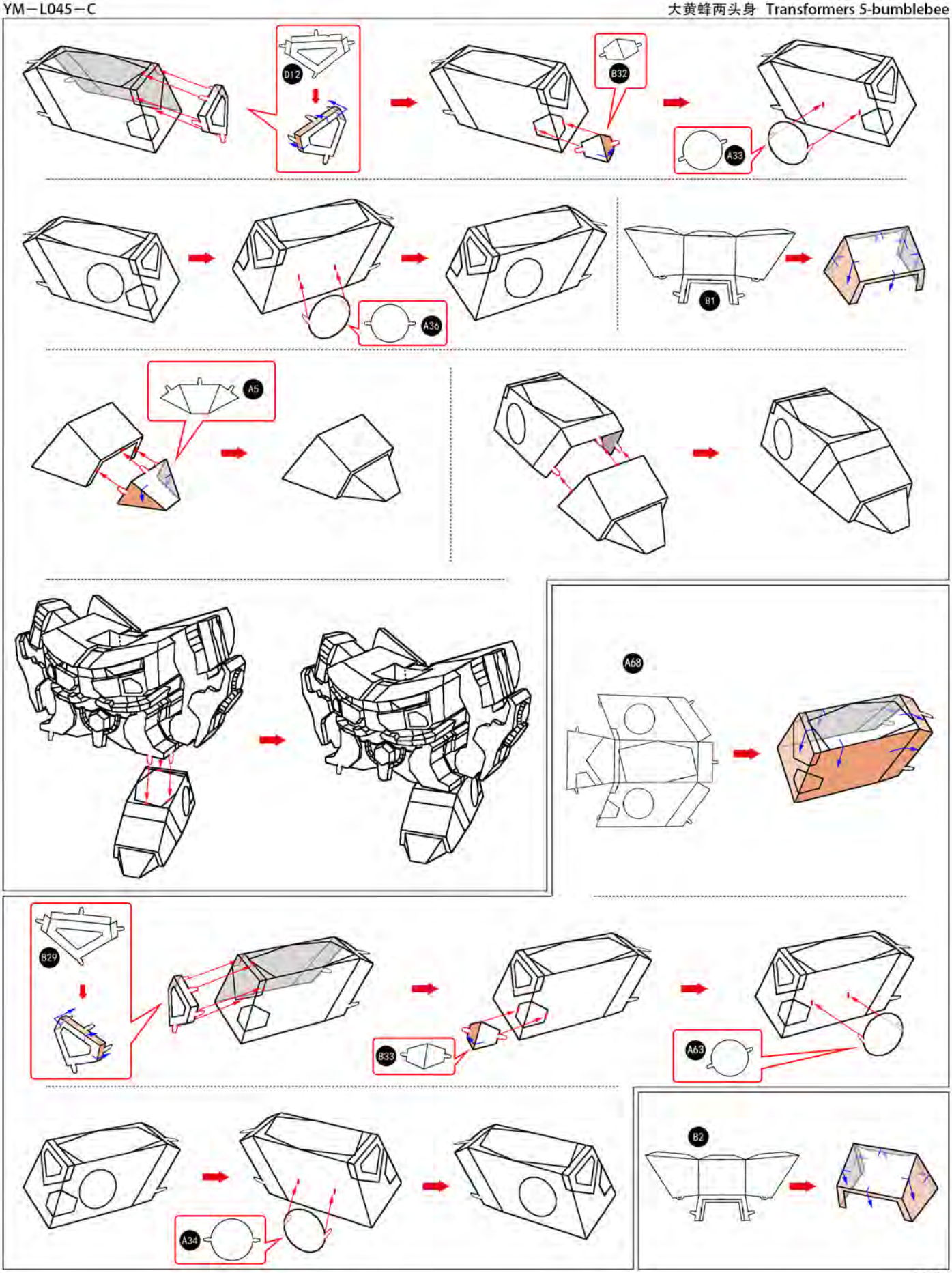
D12
B32
A33
A36
B1
A5
A68
B29
B33
A63
A34
B2

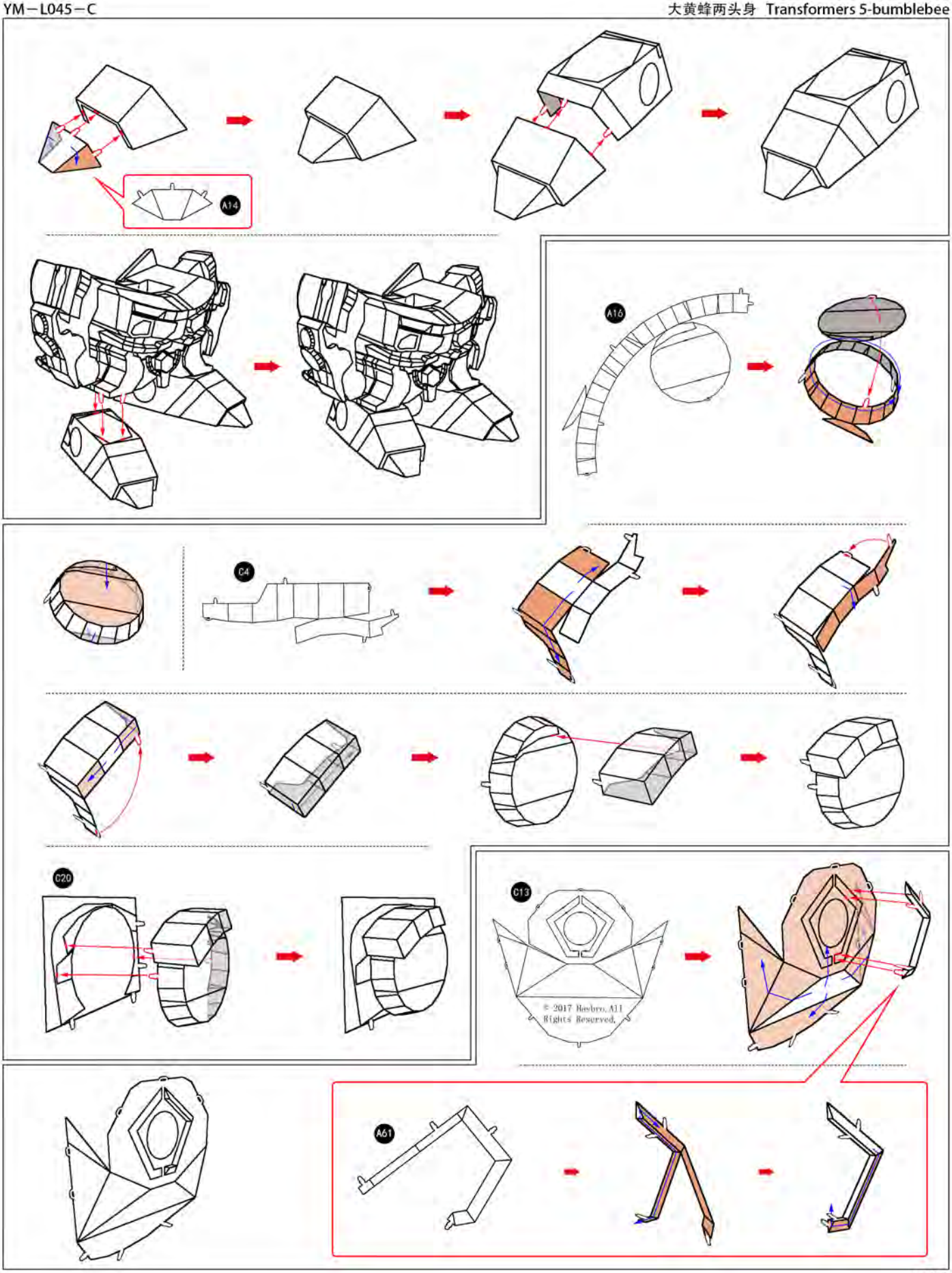
A14
A16
C4
C20
C13
© 2017 Hasbro. All Rights Reserved.
A61

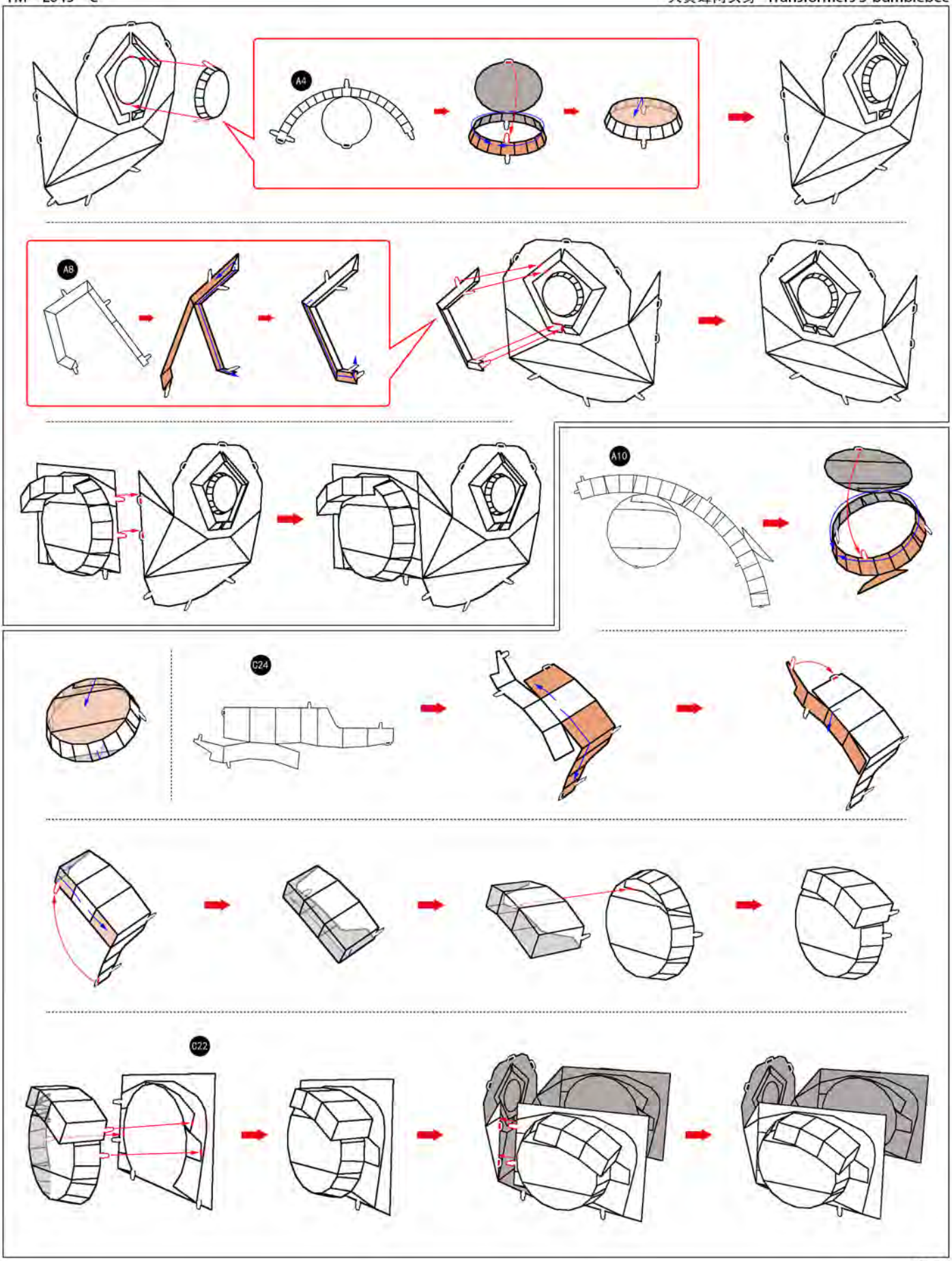
A4
A8
A10
C24
C22

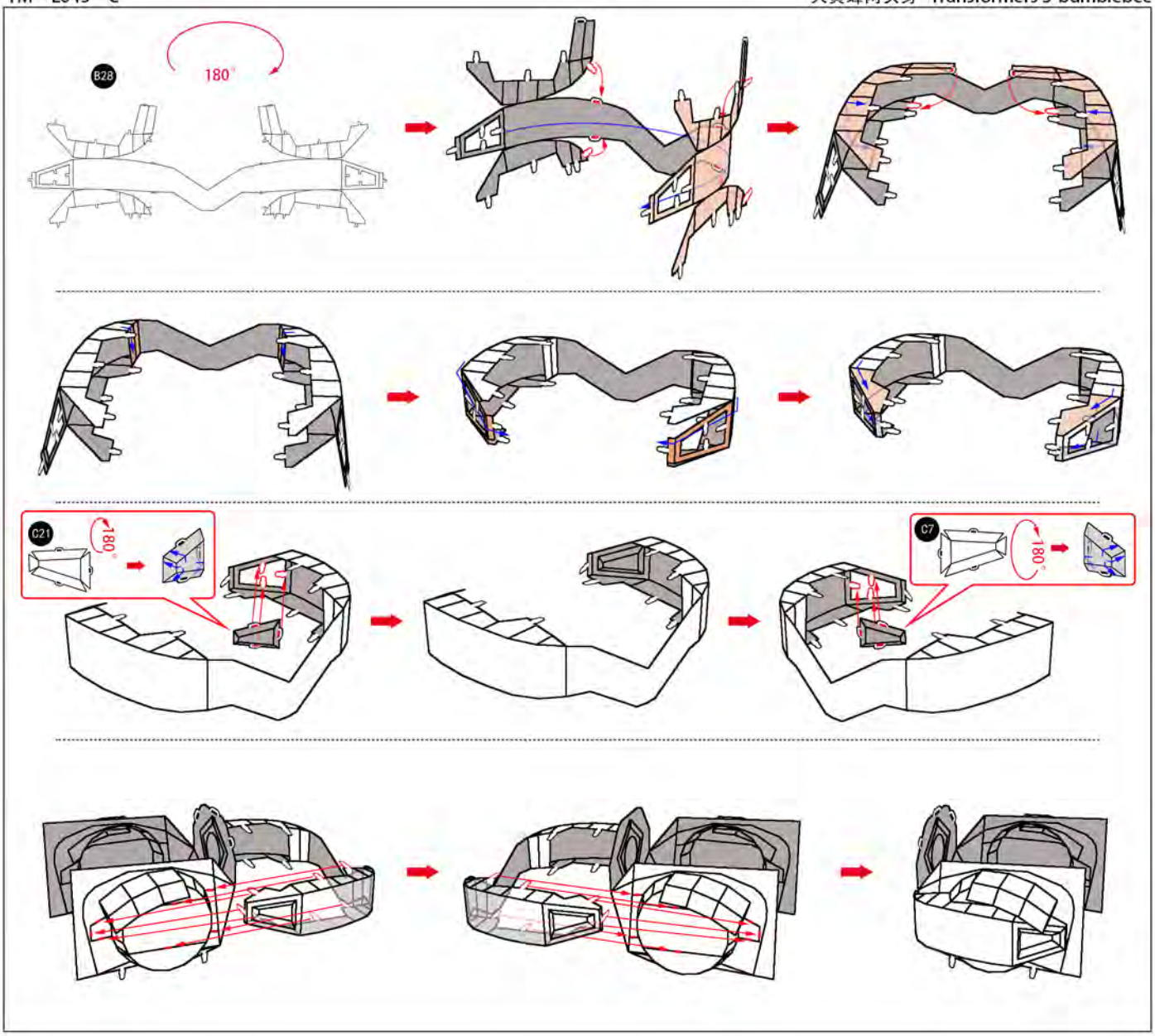
B28
180°
C21
180°
C7
180°

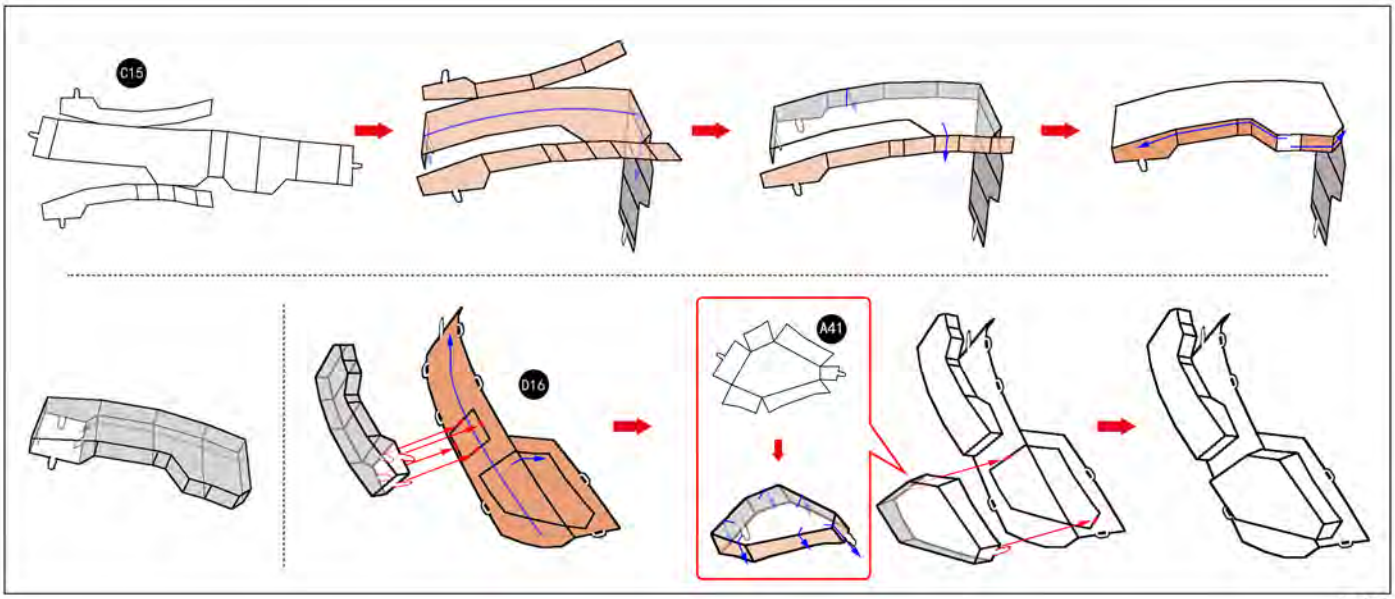
C15
D16
A41

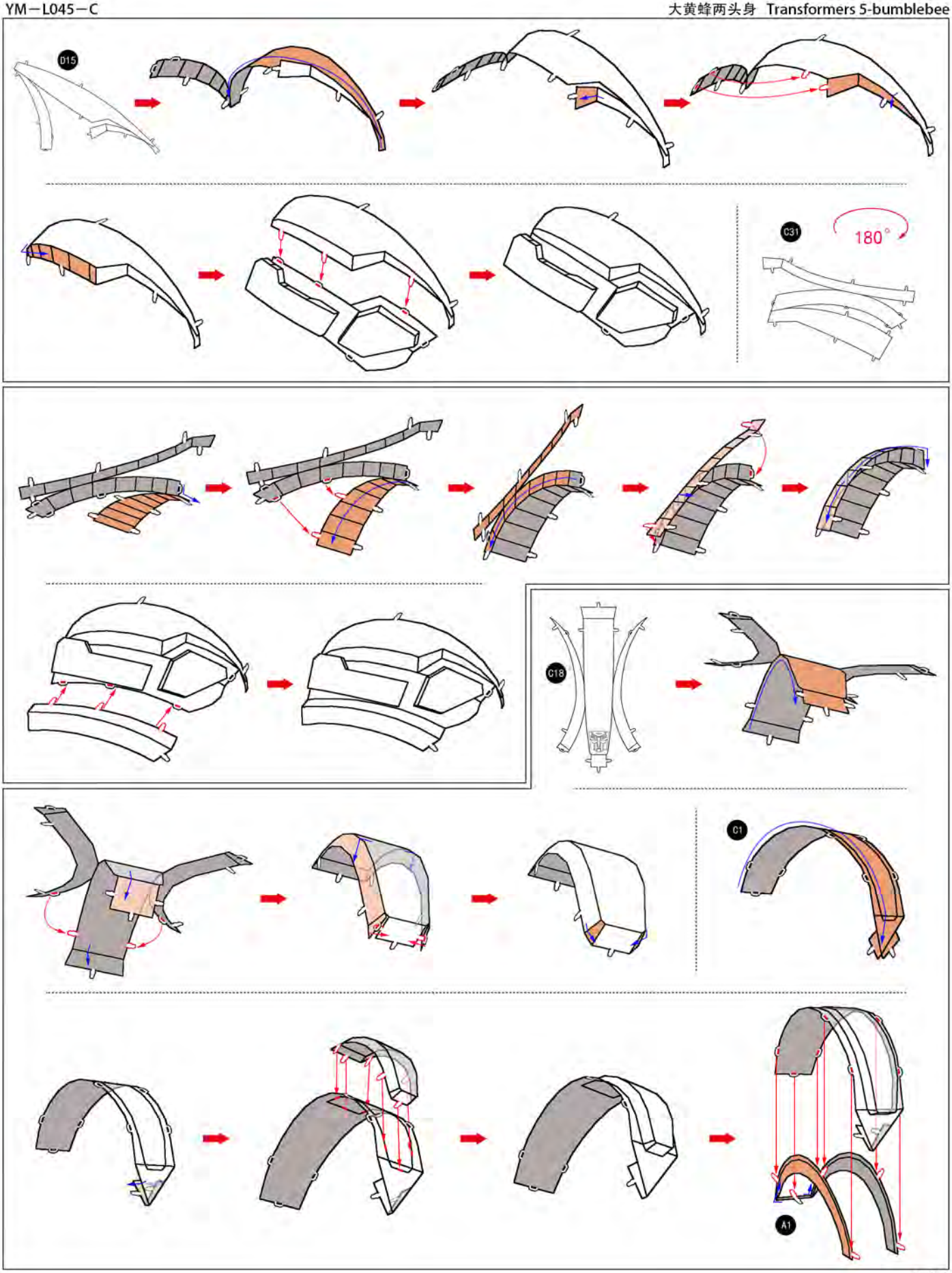
D15
C31
180°
C18
C1
A1

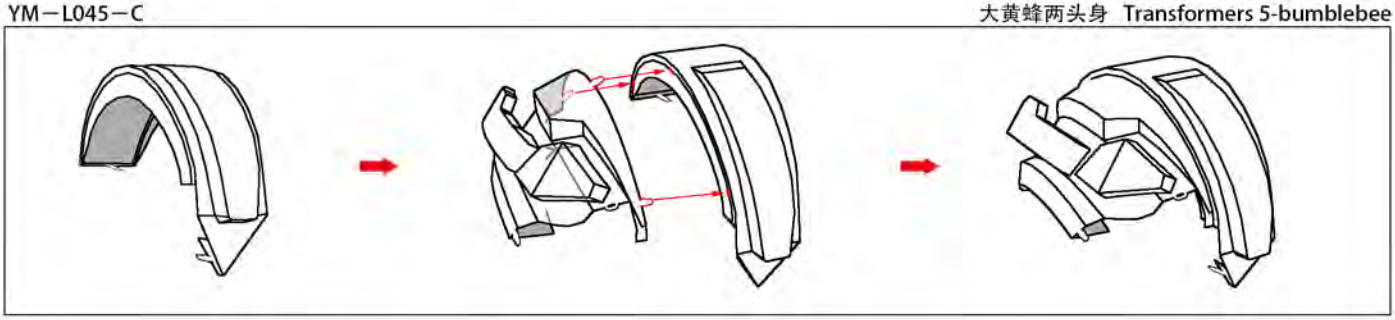

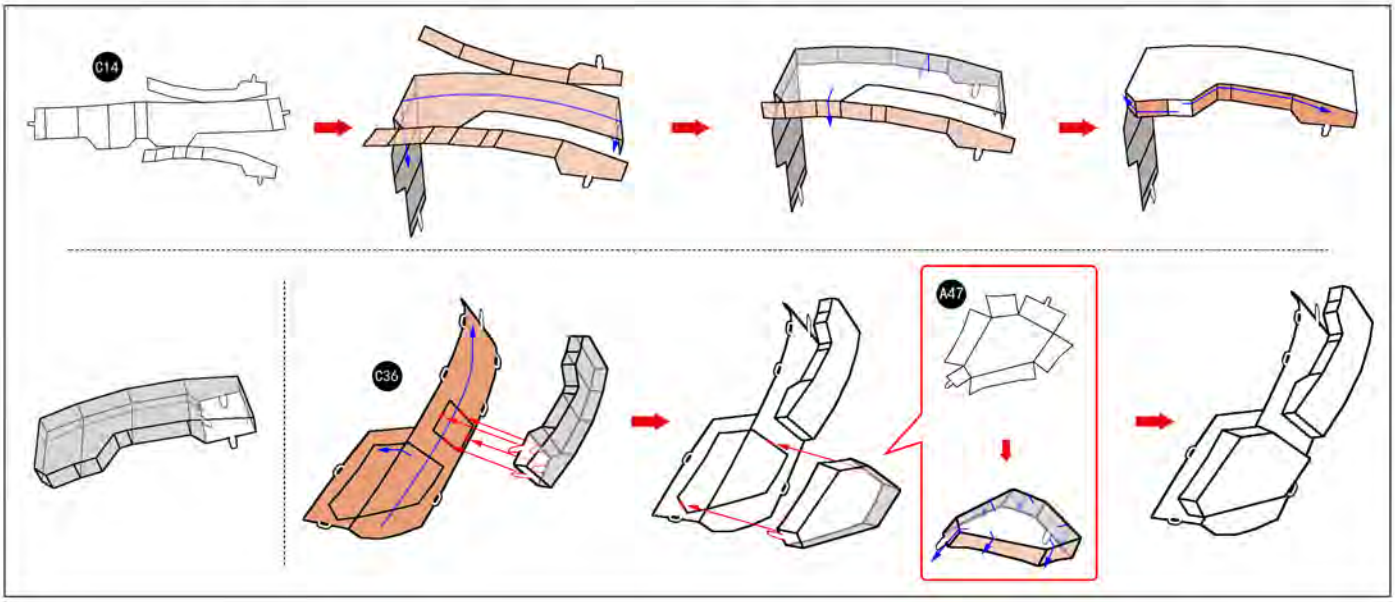
C14
C36
A47

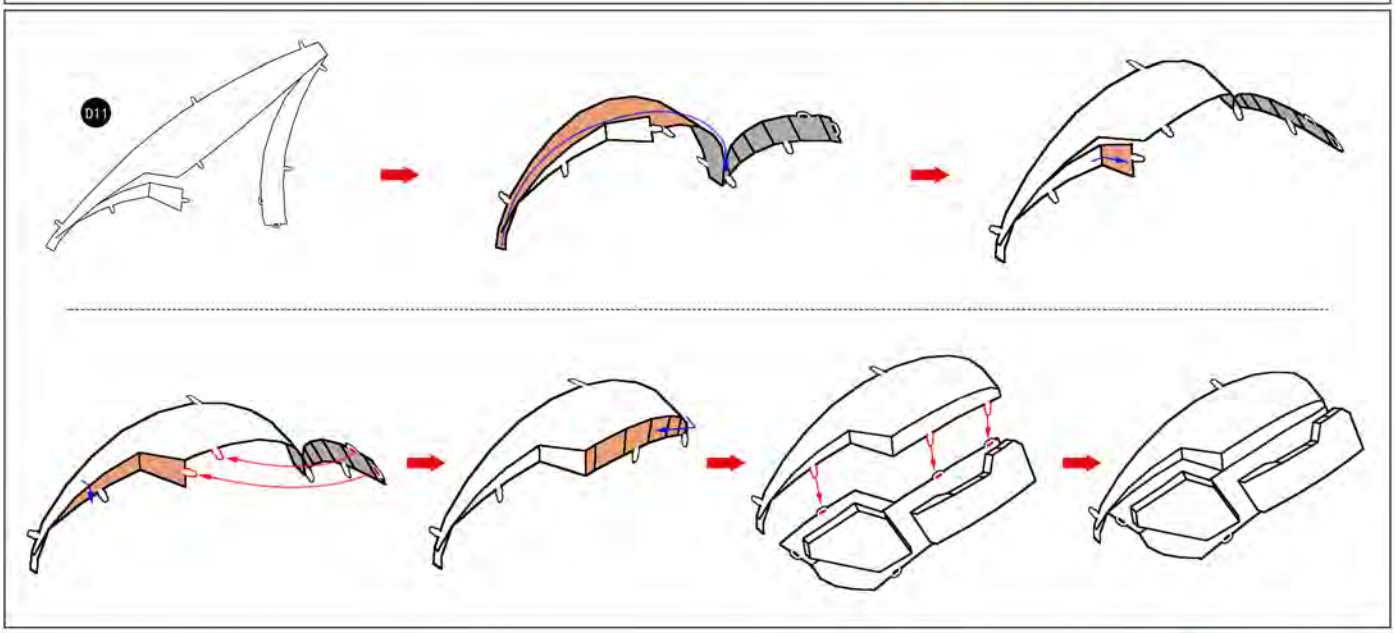
D11

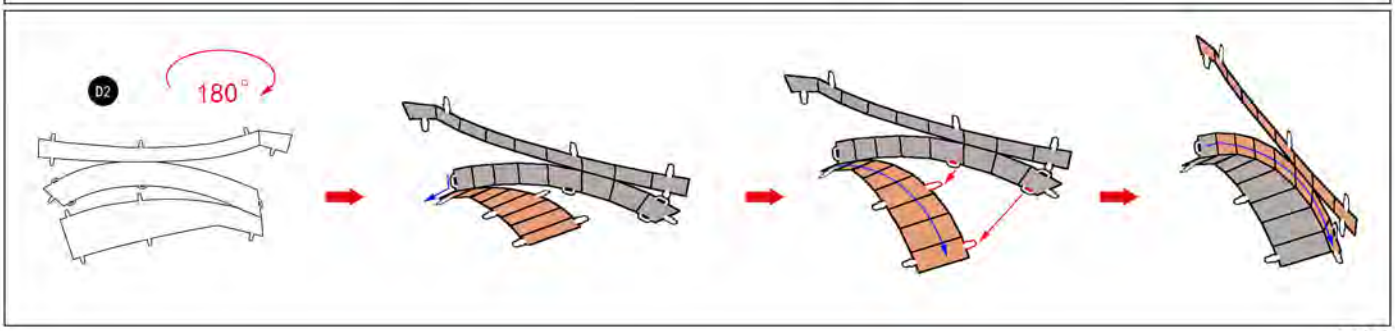
D2
180°

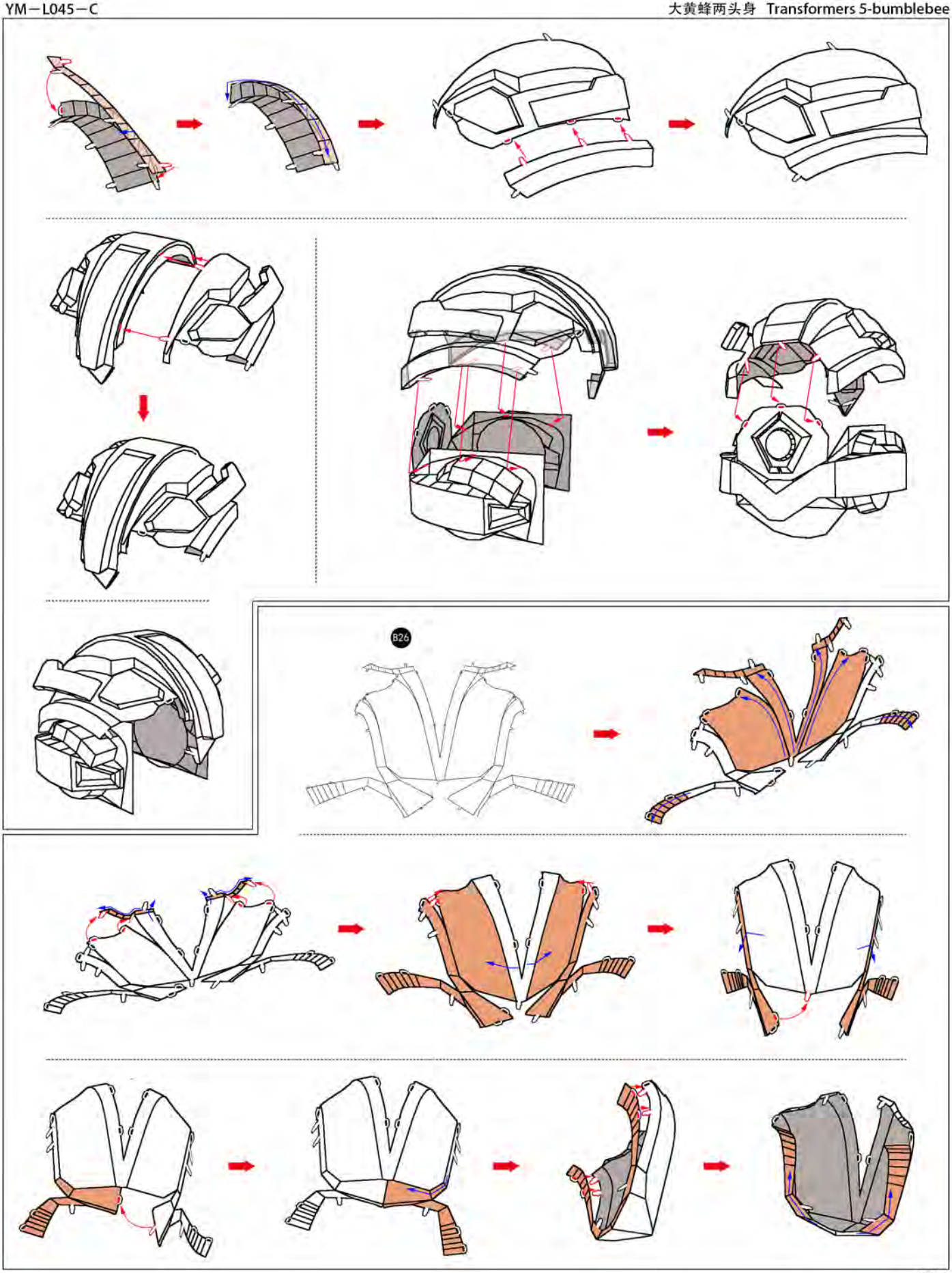
B26

金属部件C METAL SHEET C

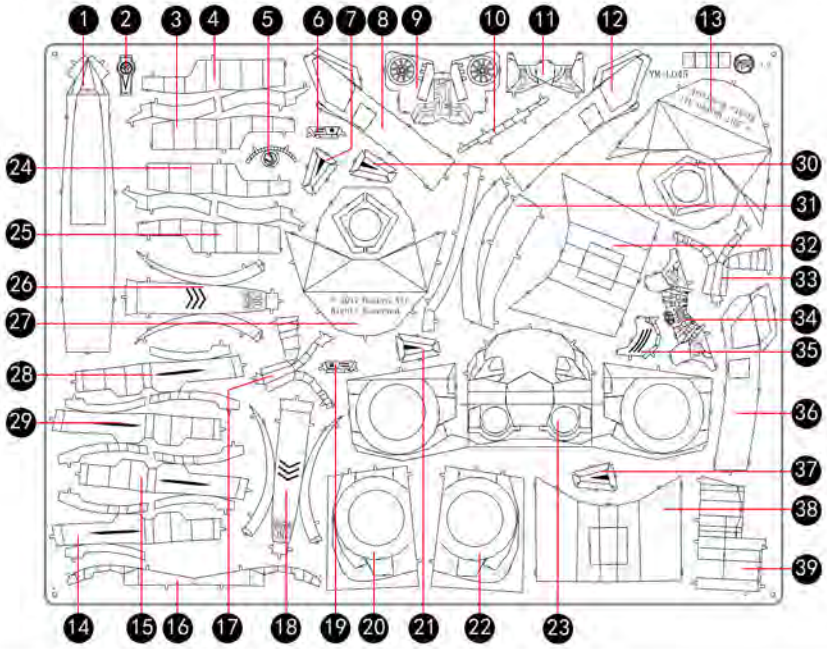

金属部件D METAL SHEET D

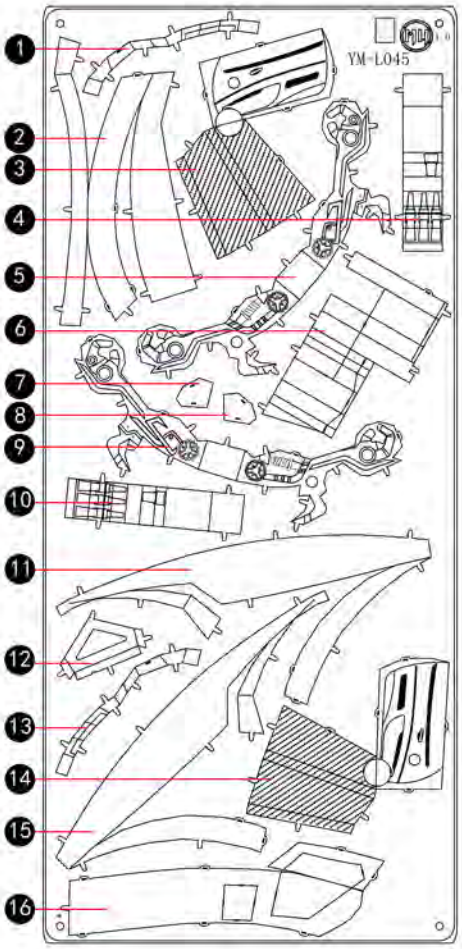

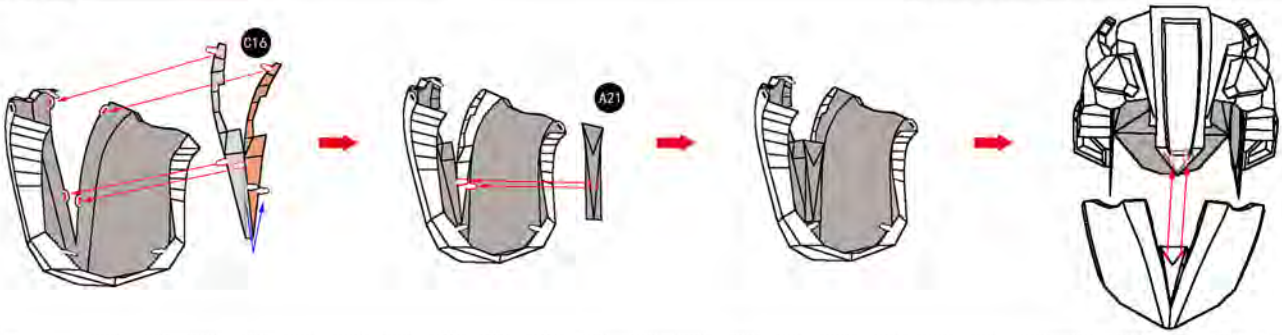
C16
A21

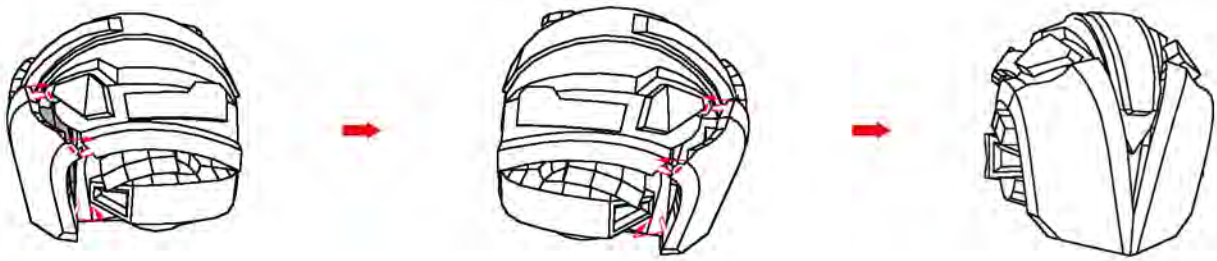

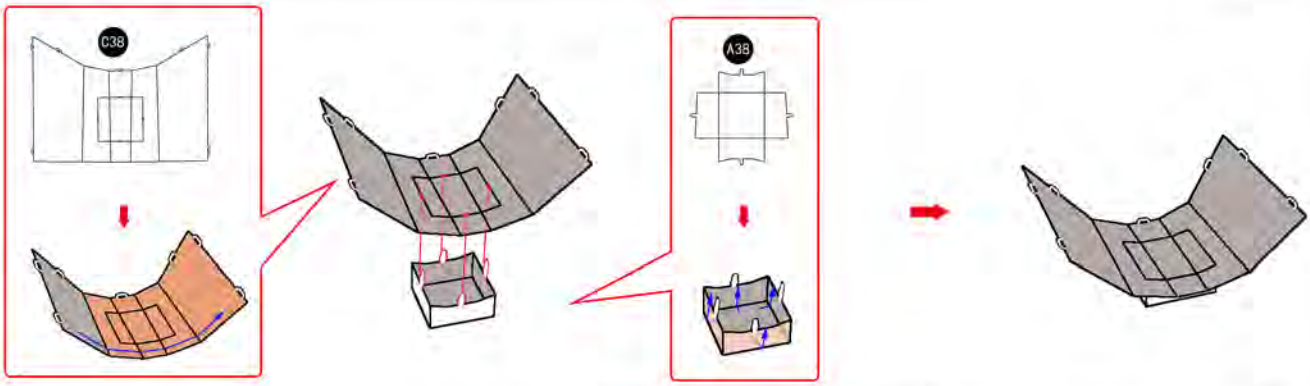
C38
A38

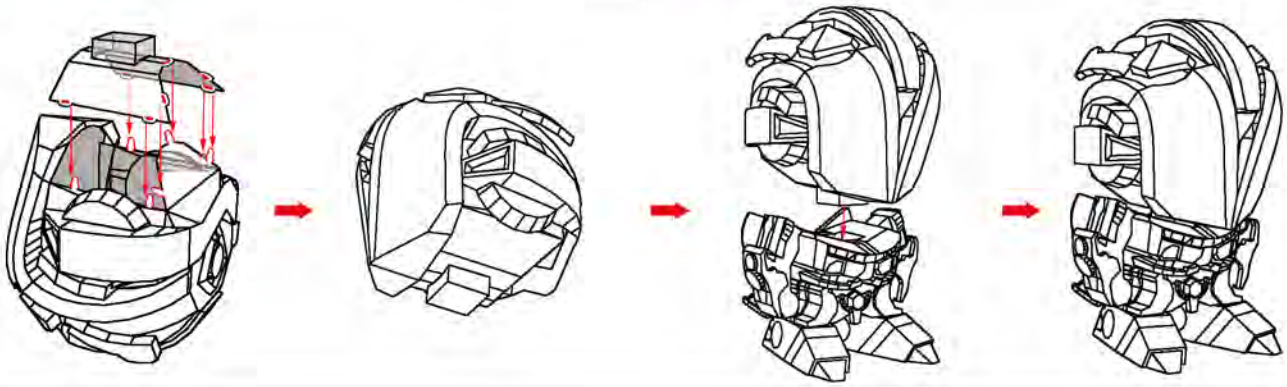

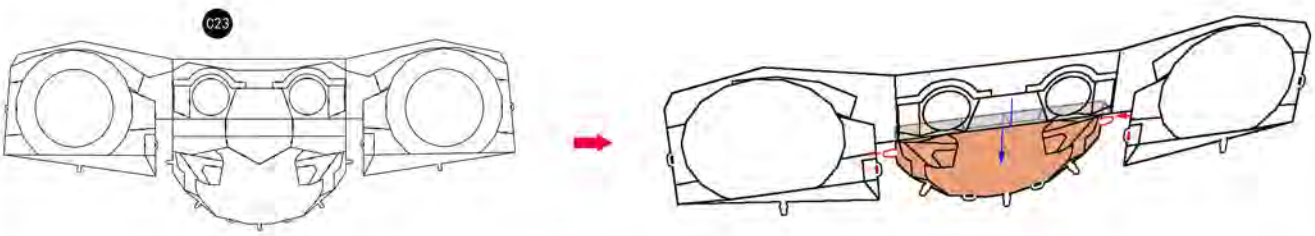
C23

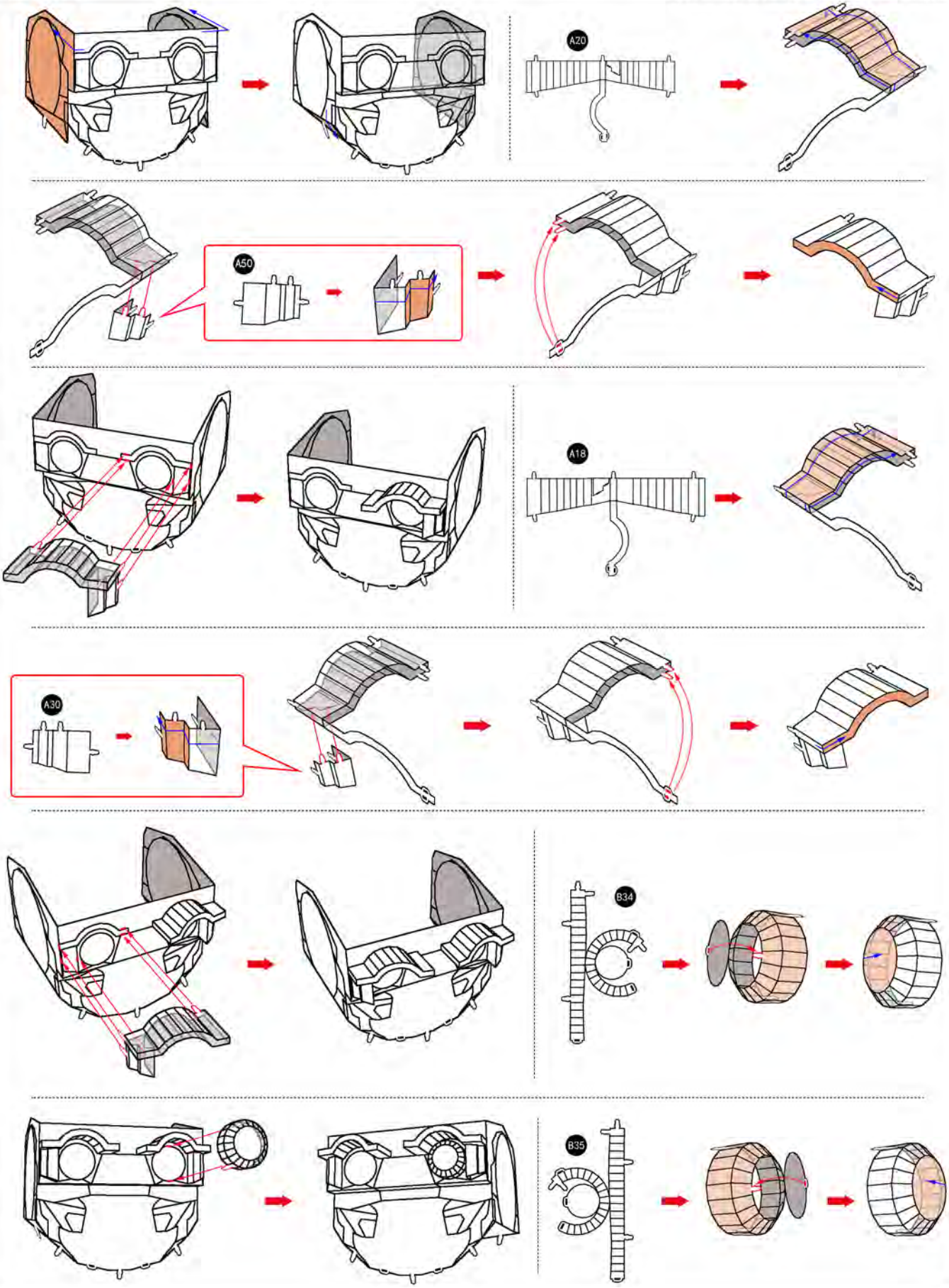
A20
A50
A18
A30
B34
B35

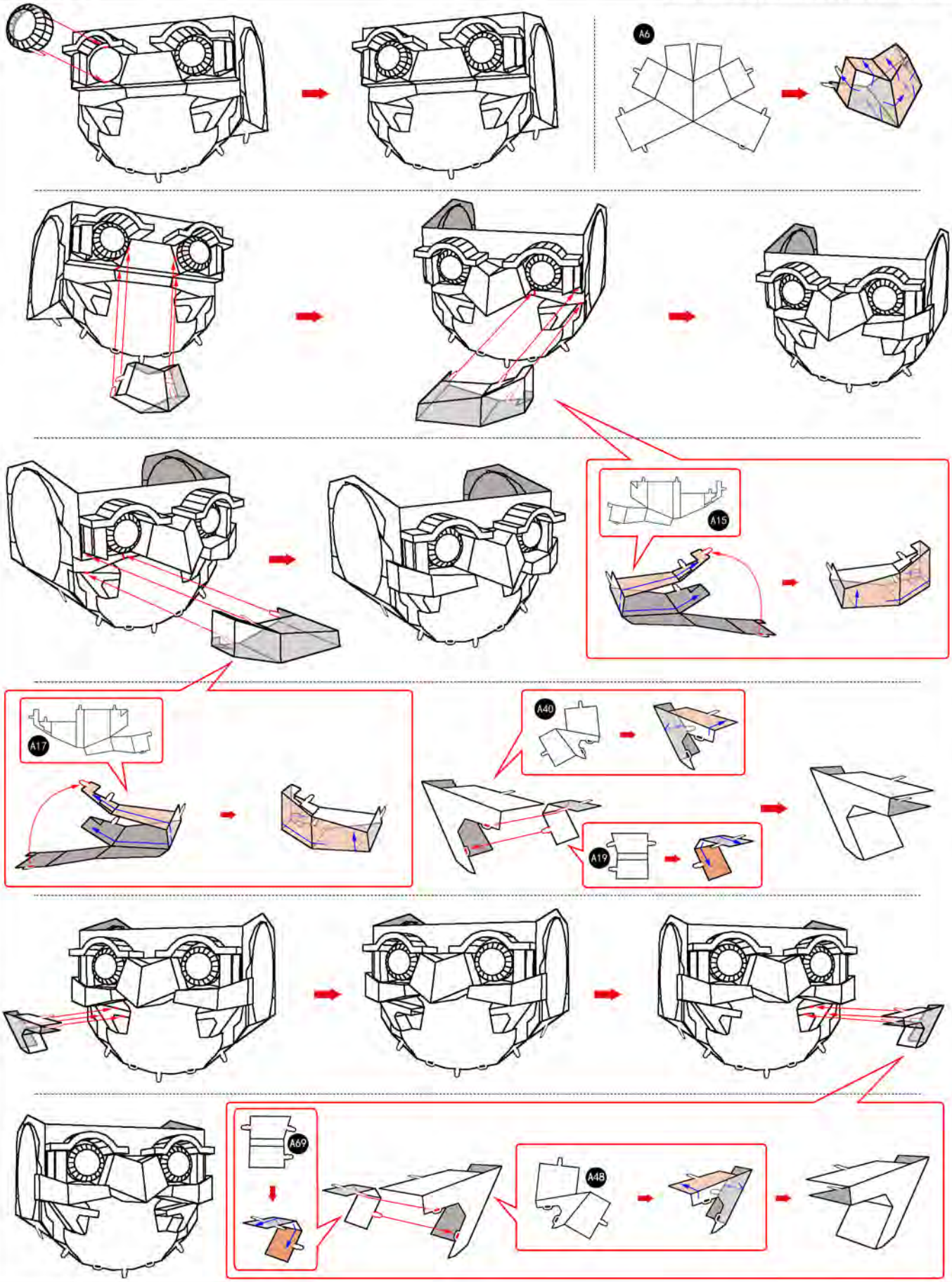
A6
A15
A17
A40
A19
A69
A48

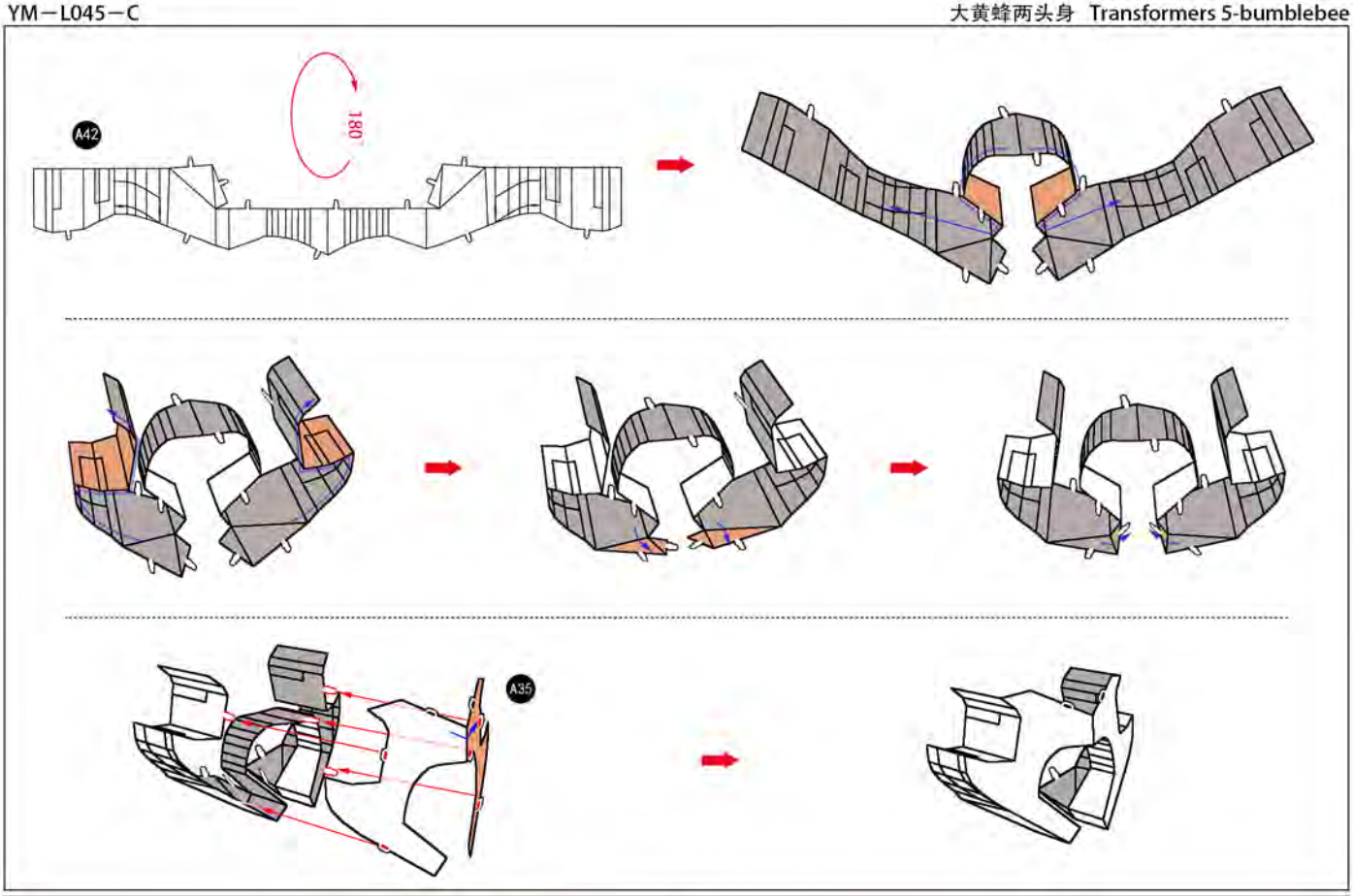
A42
180°
A35

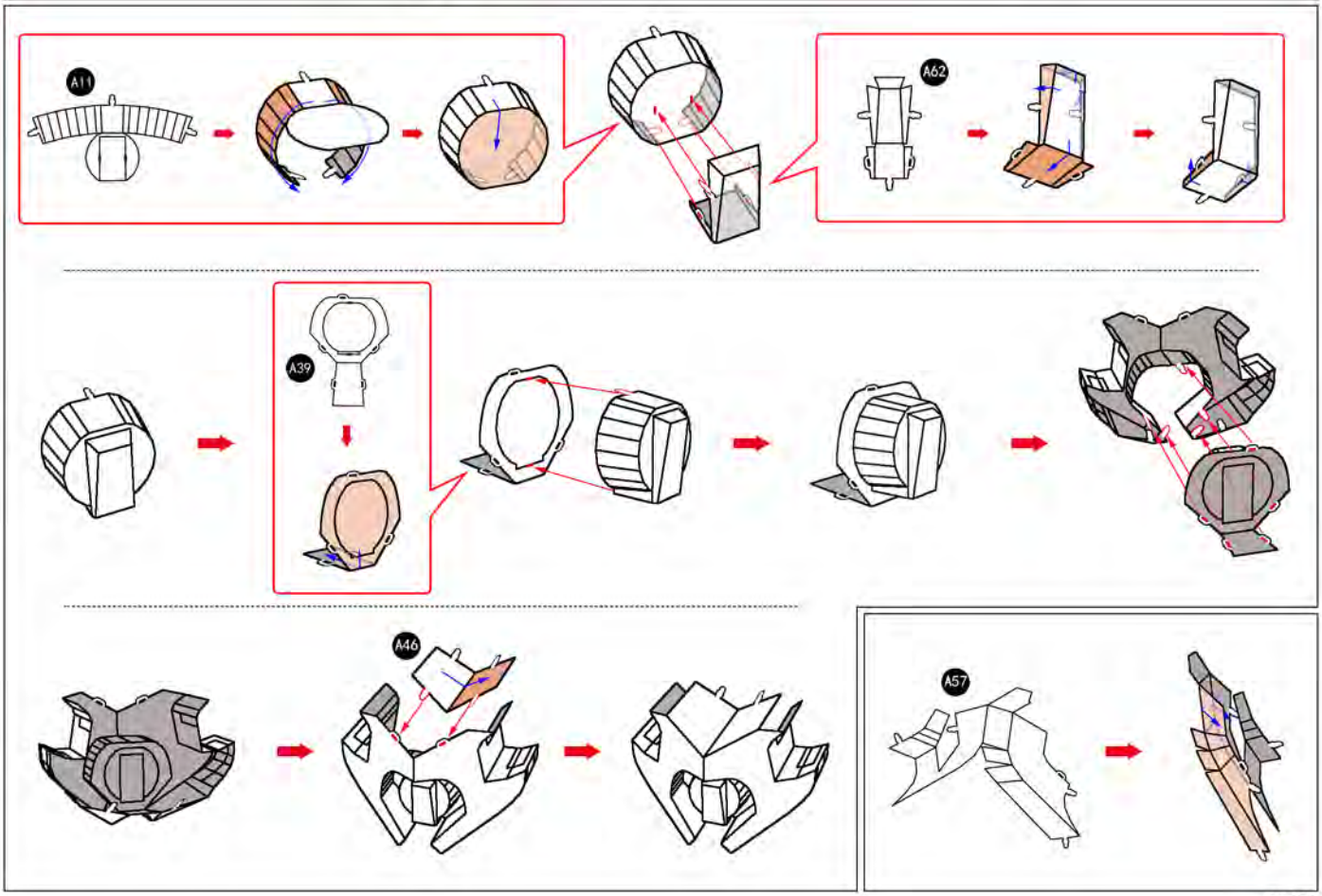
A11
A62
A39
A46
A57

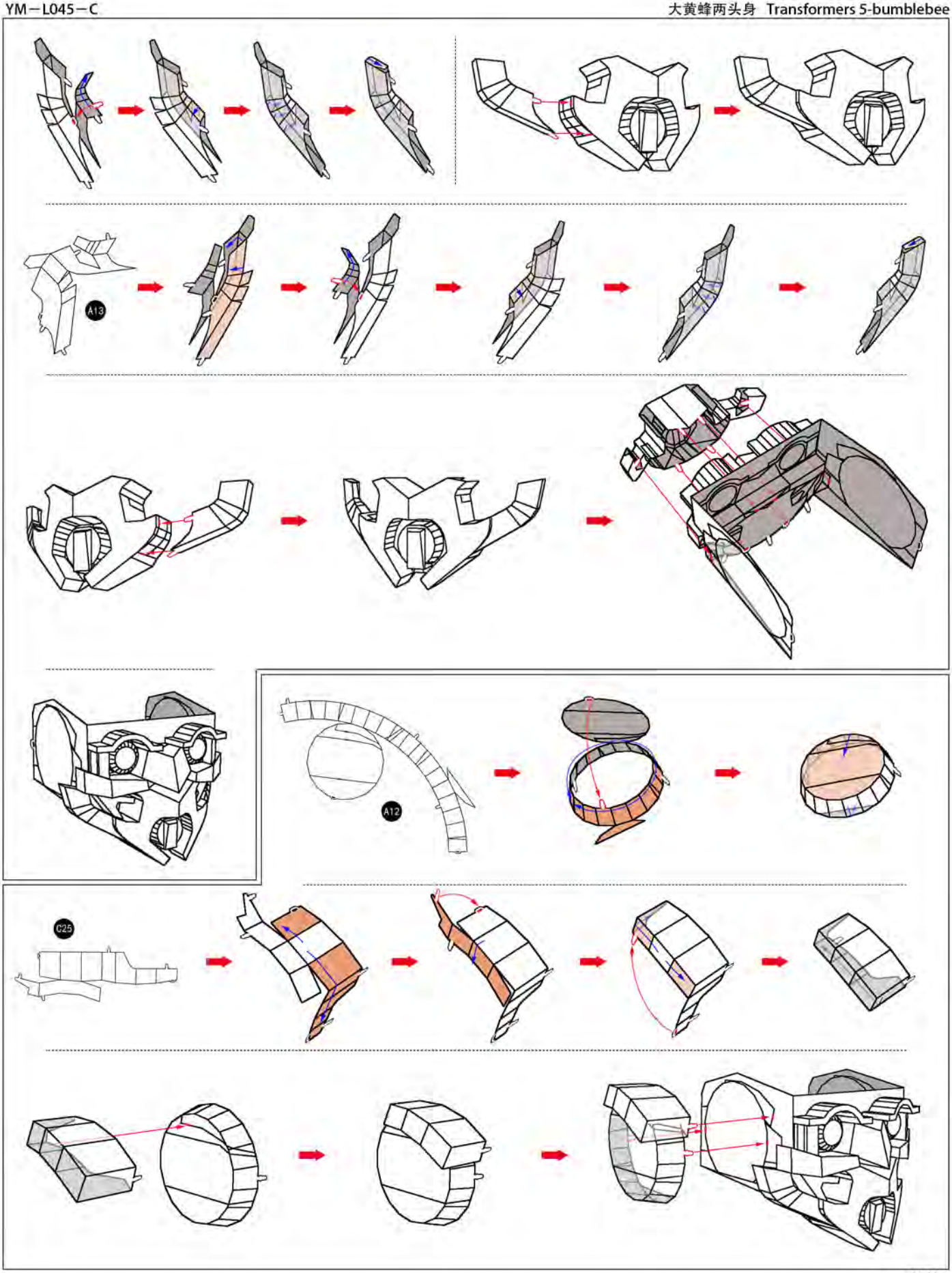
A13
A12
C25

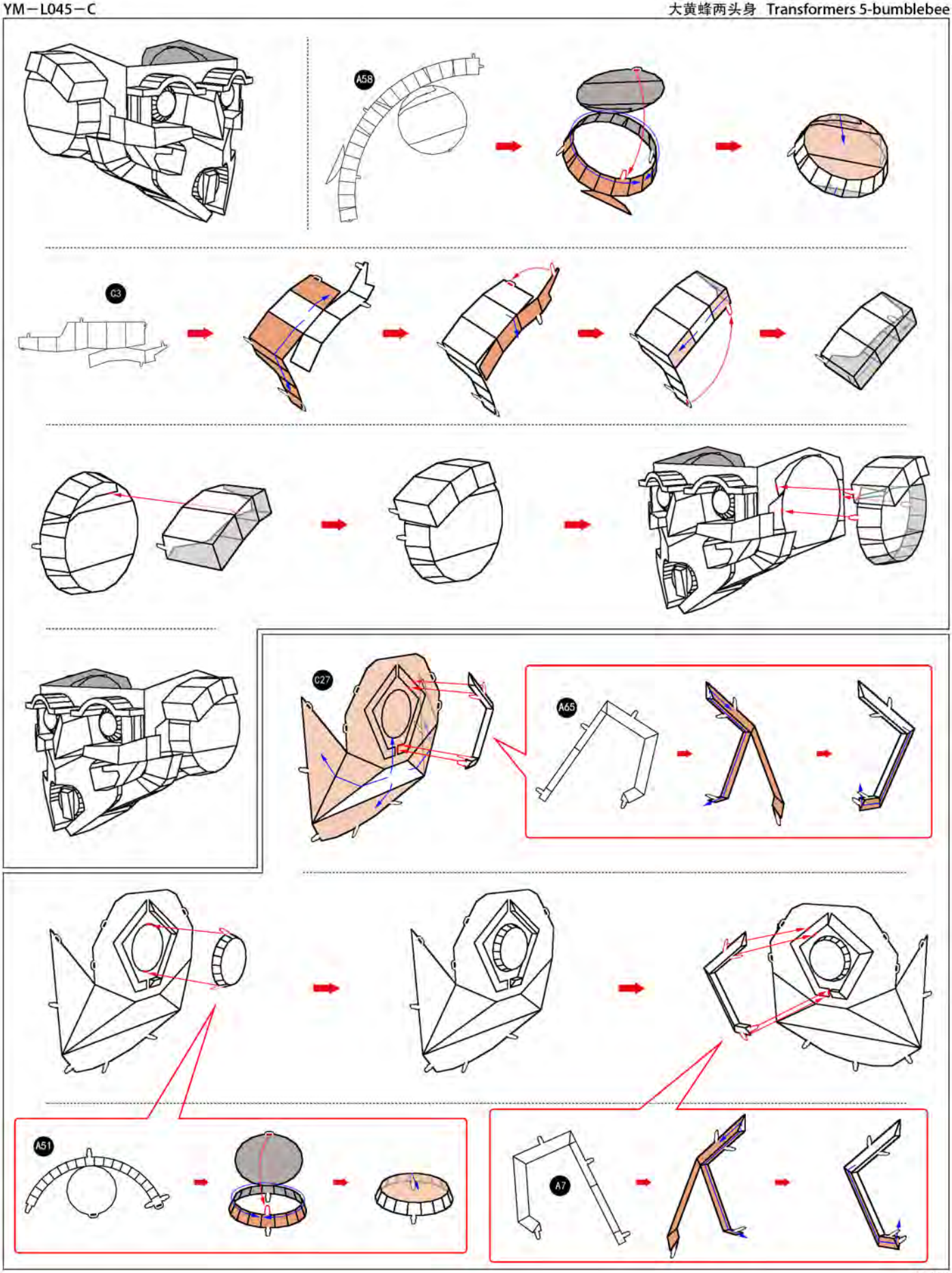
A58
C3
C27
A65
A51
A7

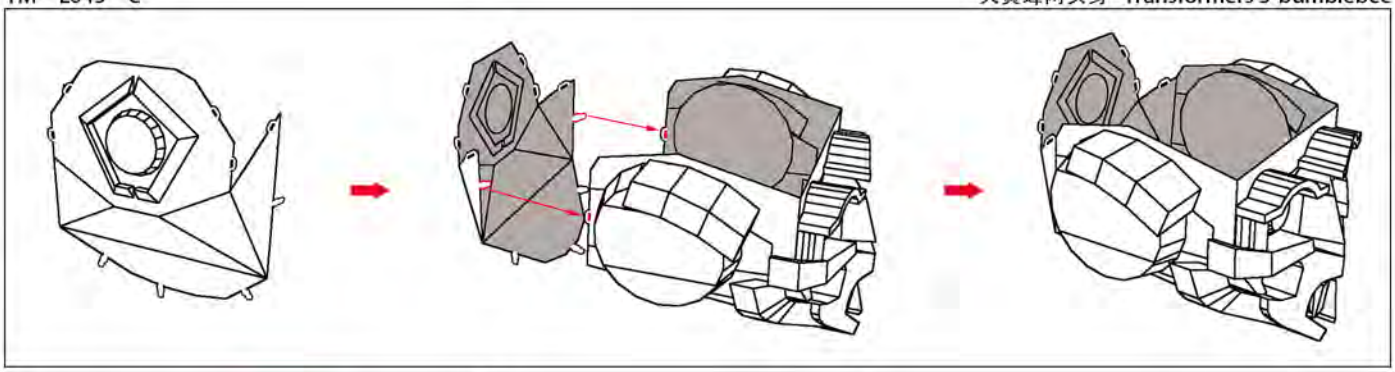

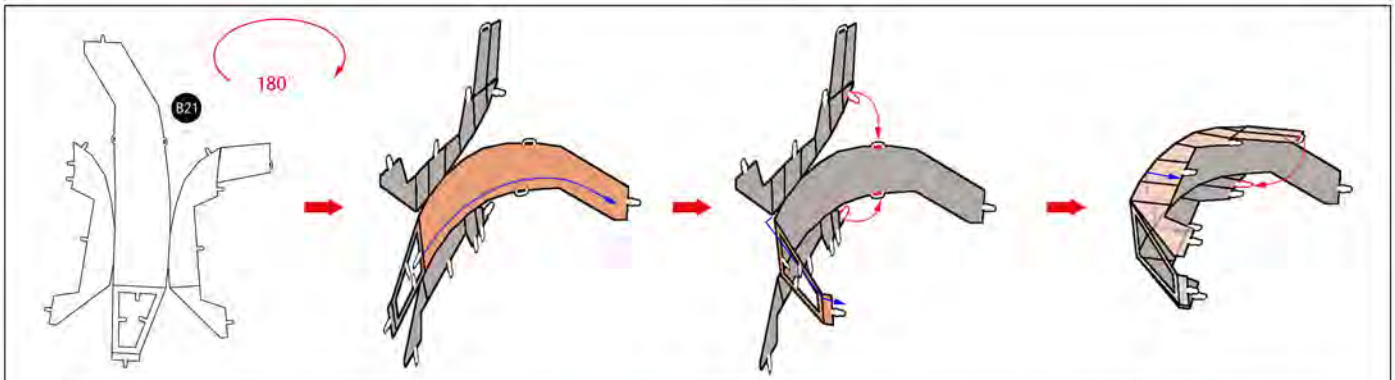
B21
180°

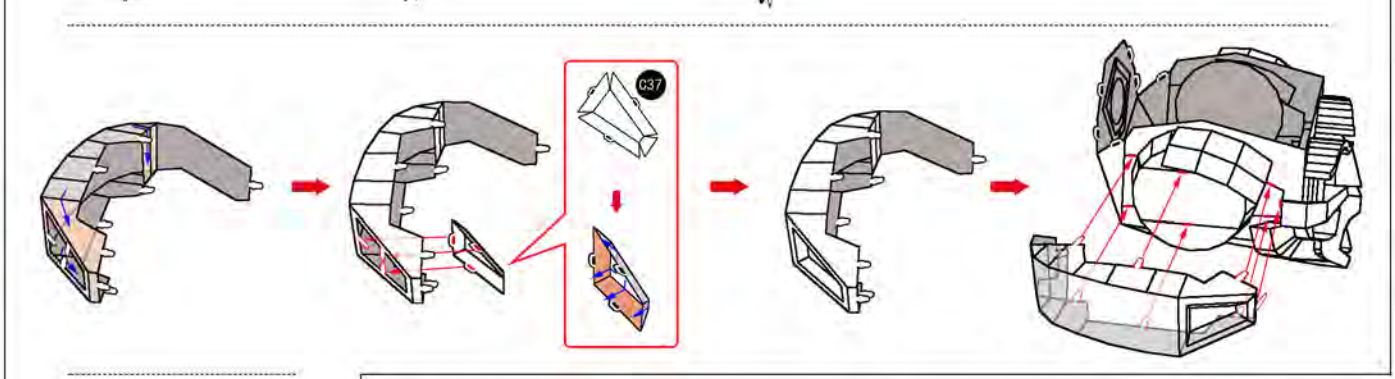
C37

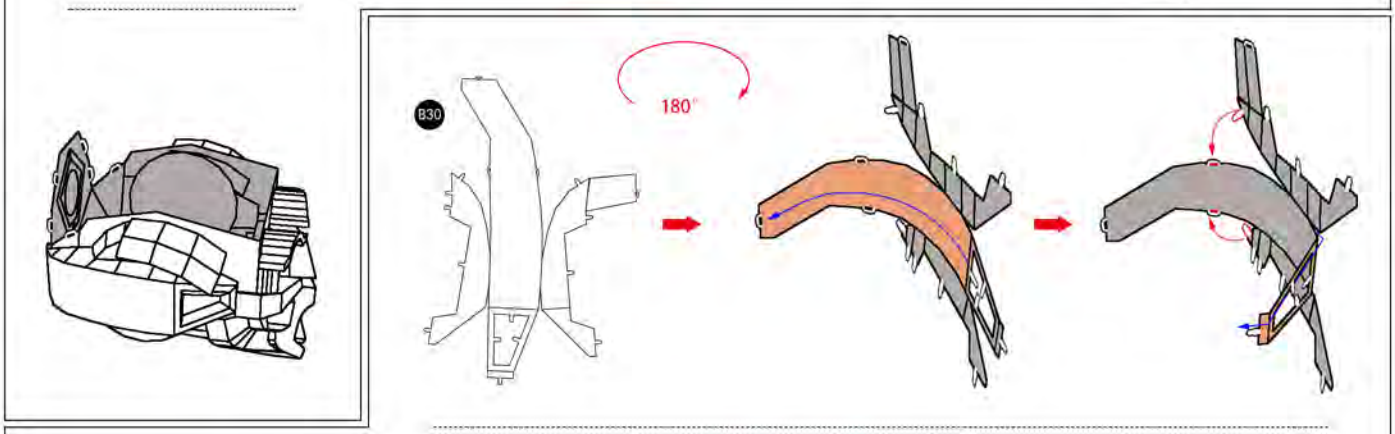
B30
180°

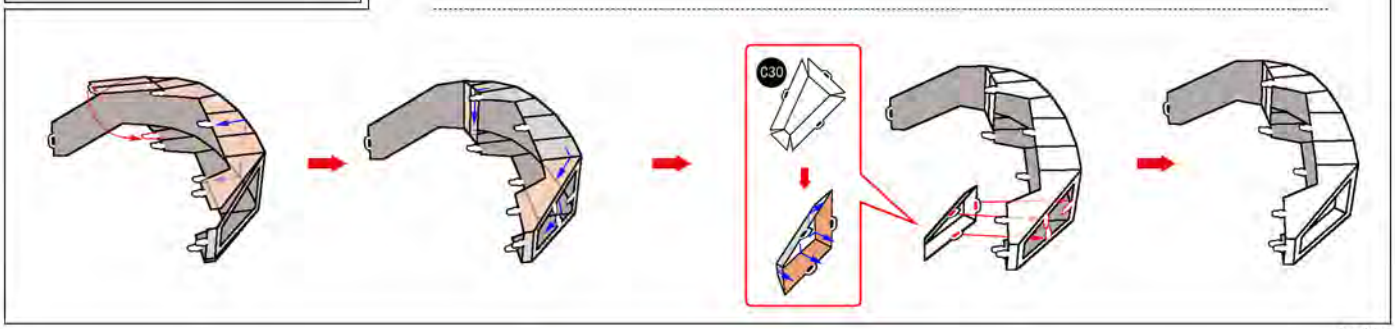
C30

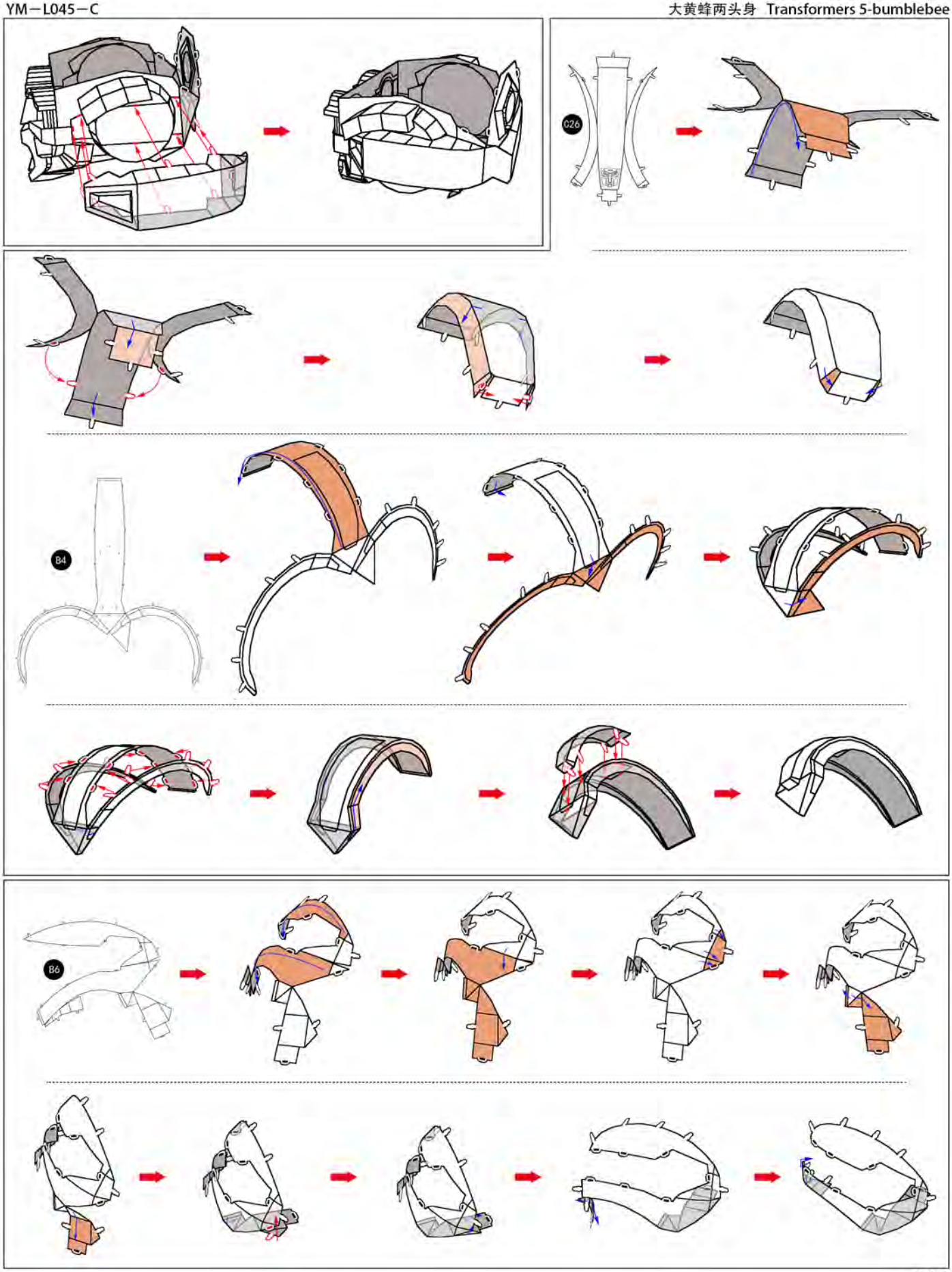
C26
B4
B6

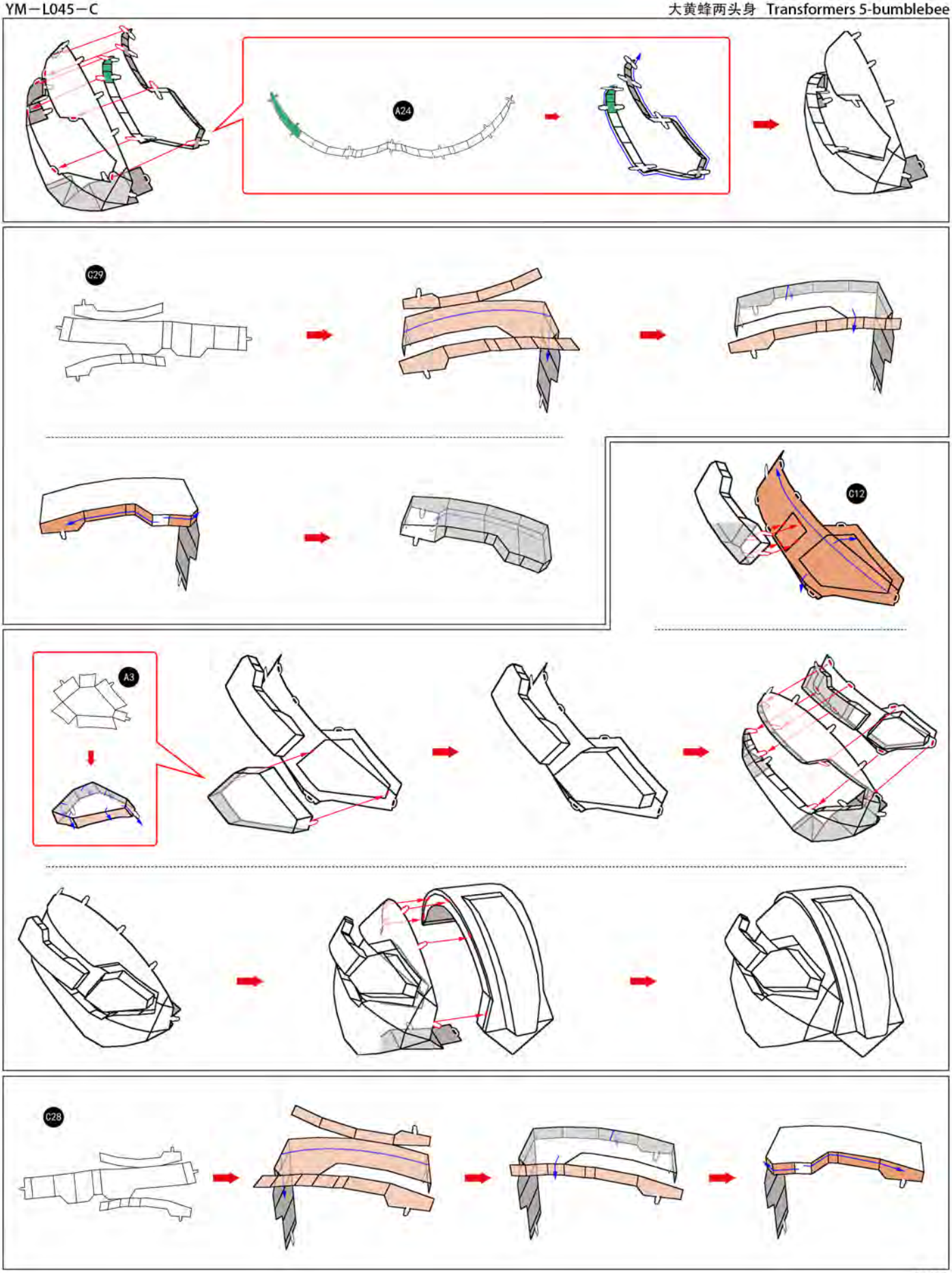
A24
C29
C12
A3
C28

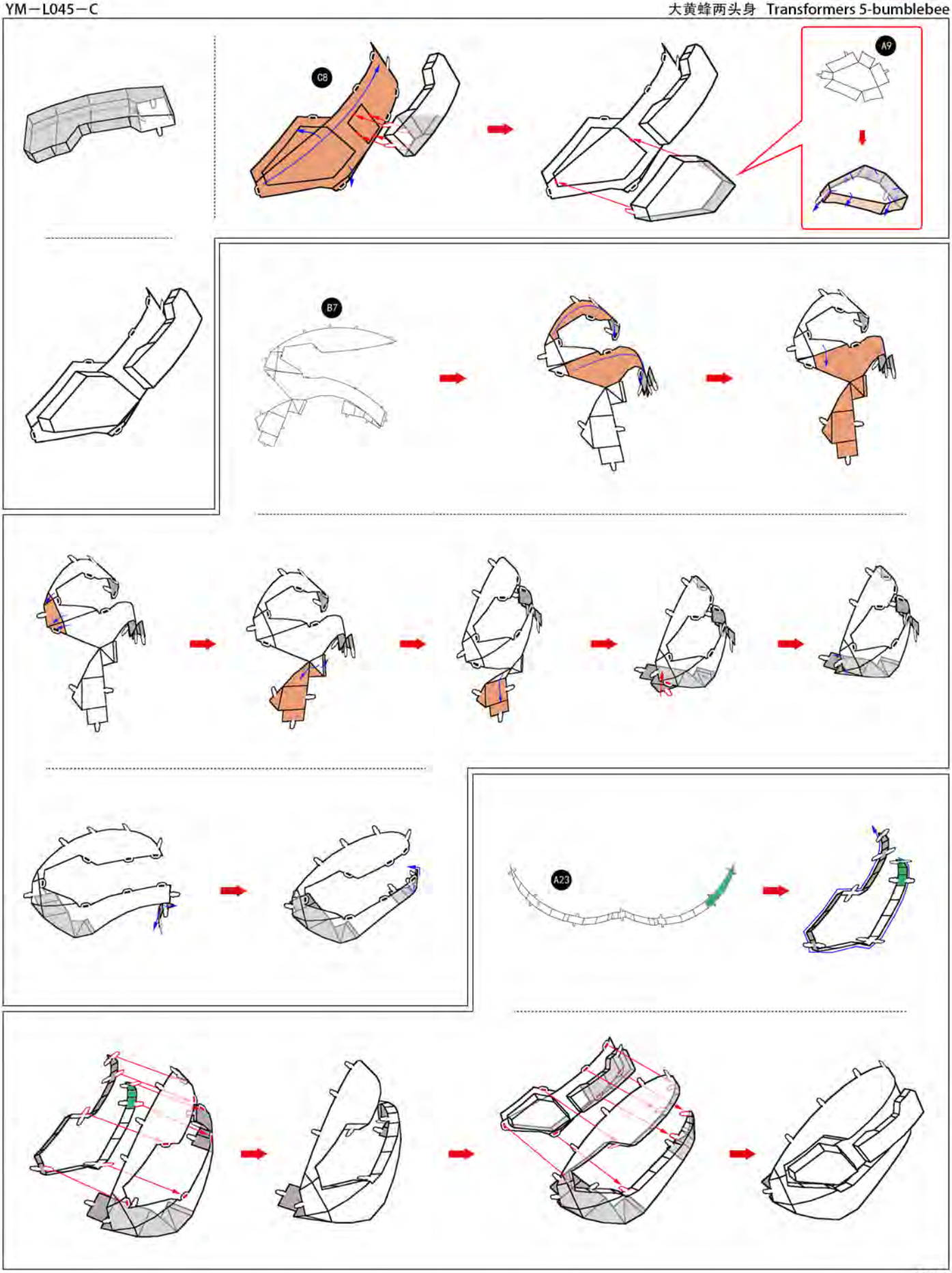
C8
A9
B7
A23

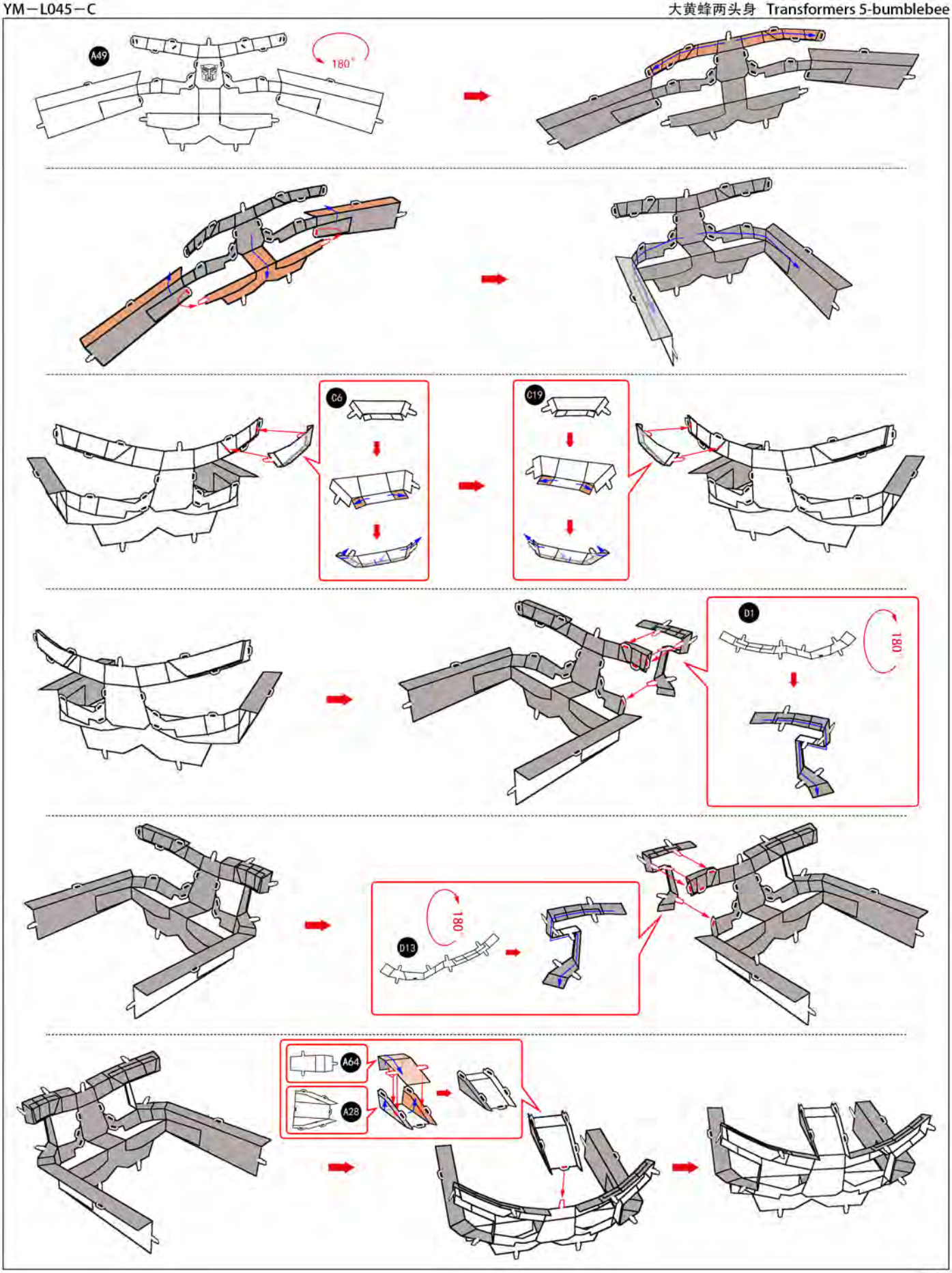
A49
180°
C6
C19
D1
180°
D13
180°
A64
A28

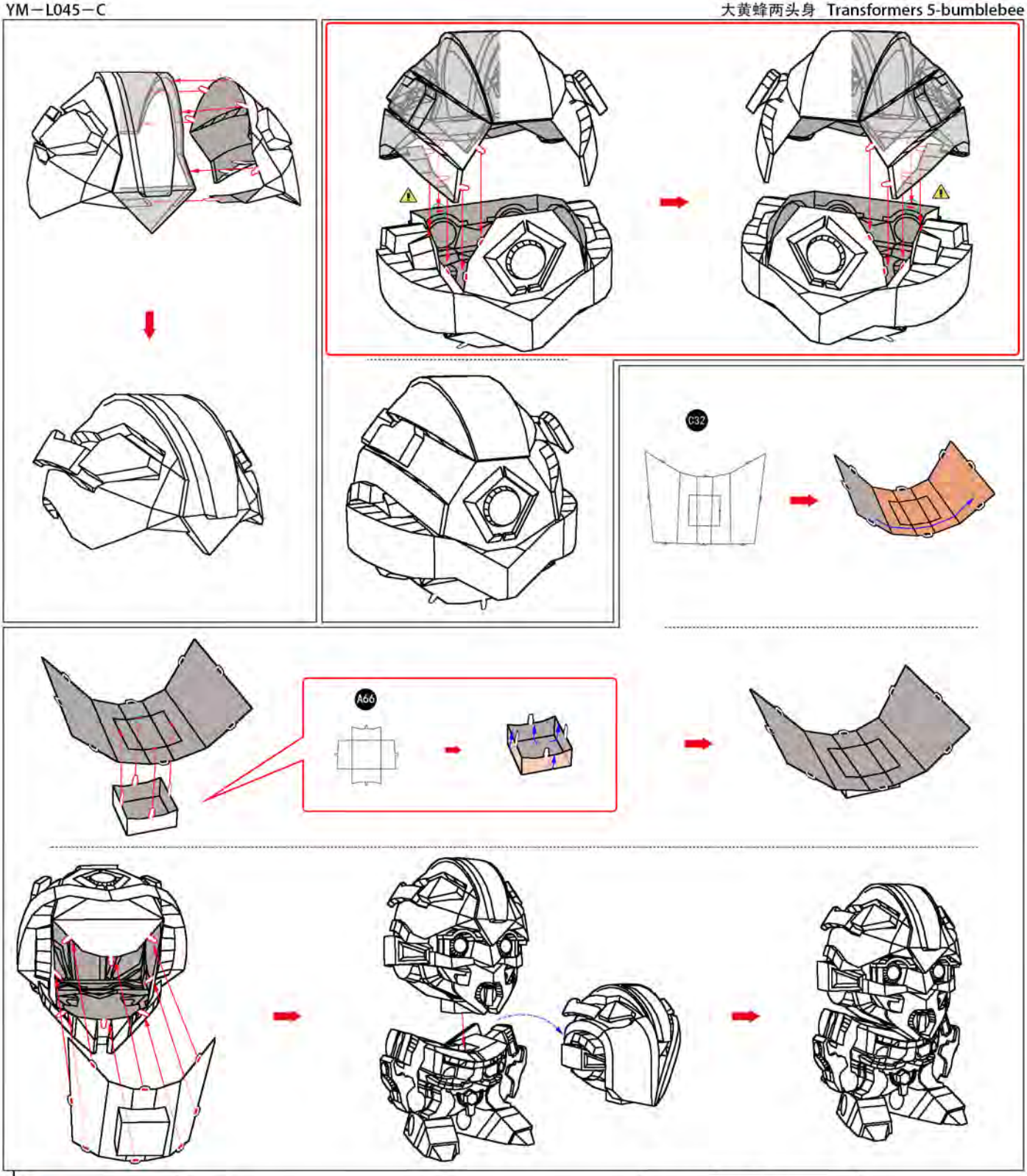

MU 艺模
MU art model
上海艺模电子科技有限公司
Shanghai Art Model Electronic
Science and Technology Co., Ltd.
电话：021-58942999
公司主页：www.maplemu.com
Design by: Kaede
铁板妞侯
丫丫
Tel:021-58942999
Website:www.maplemu.com

扫码加入微信公众号 解锁更多模型
Scan the two-dimensional code
to join us and unlock more models.
关注我们
focus on us

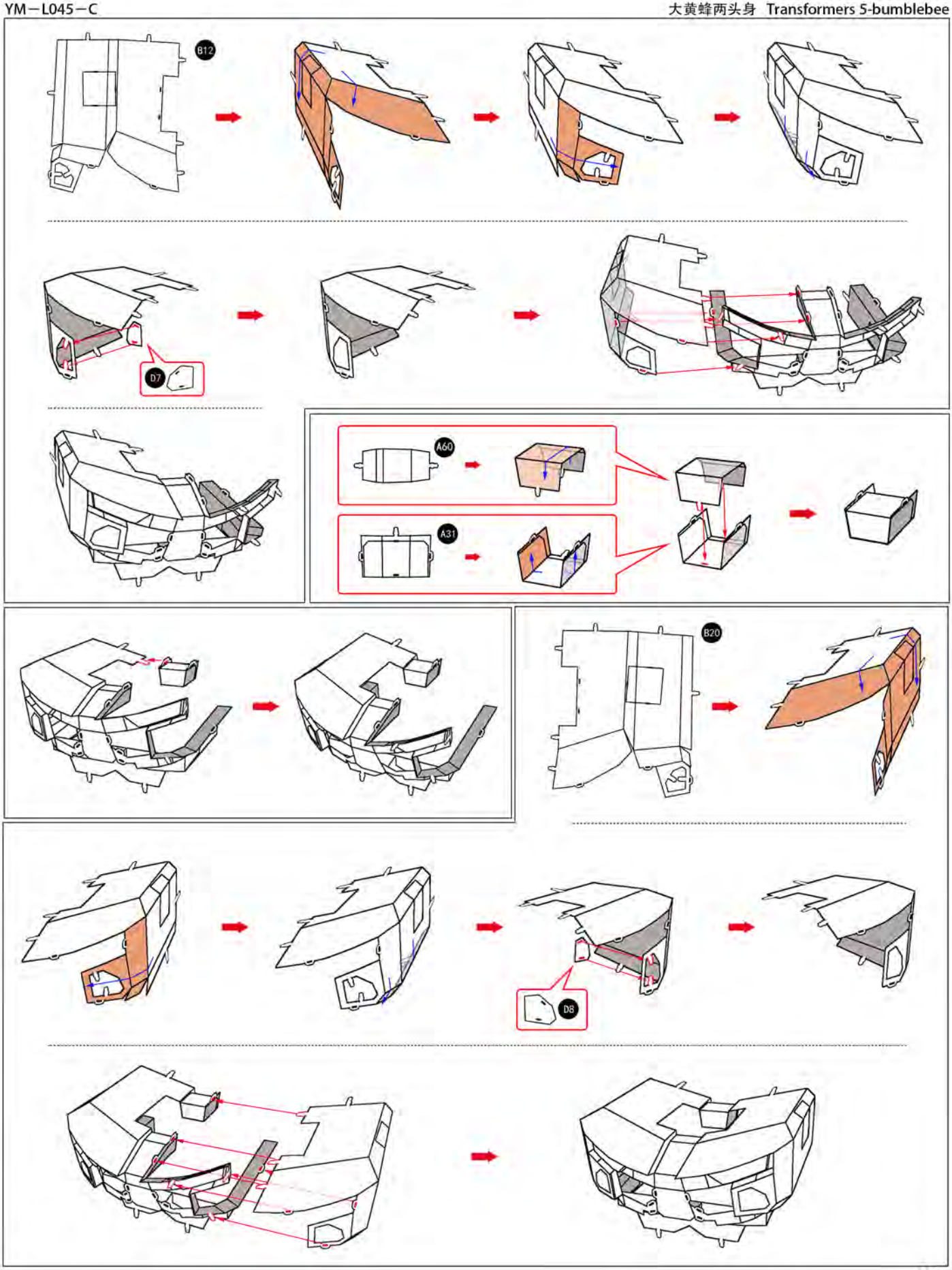
B12
D7
A60
A31
B20
D8

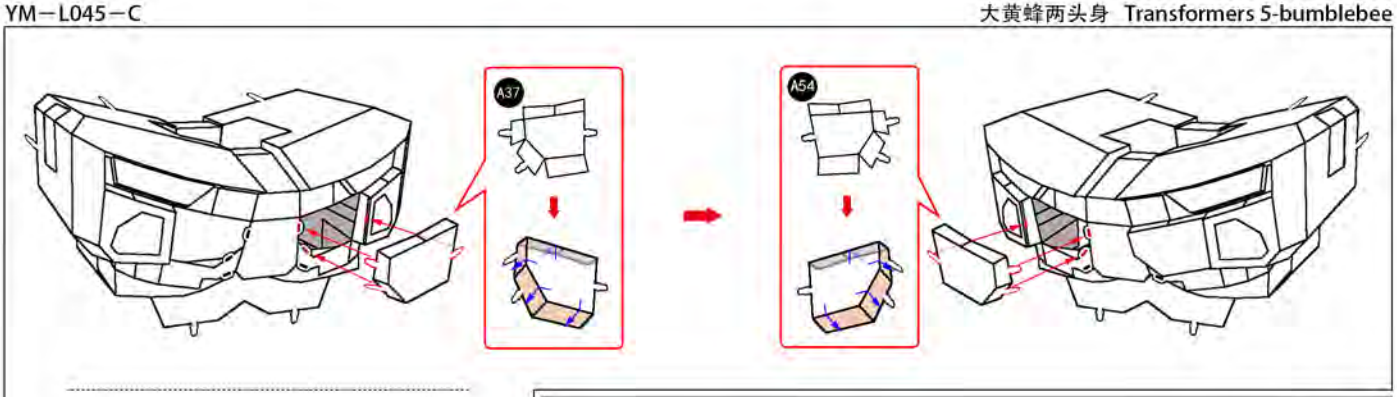
A37
A54

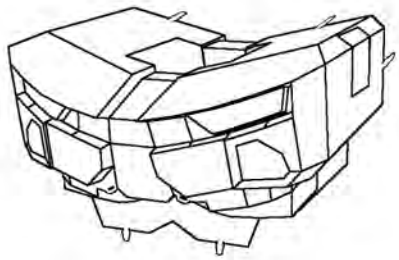

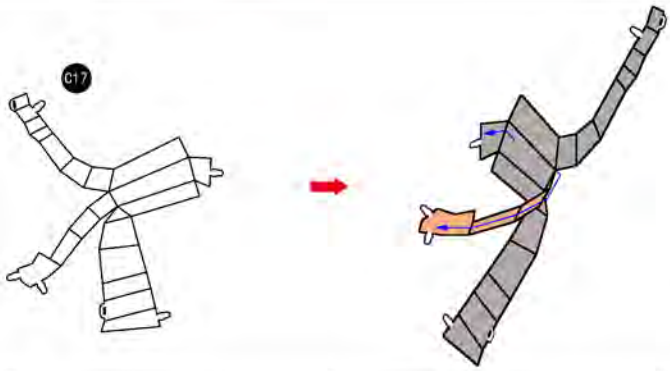
C17

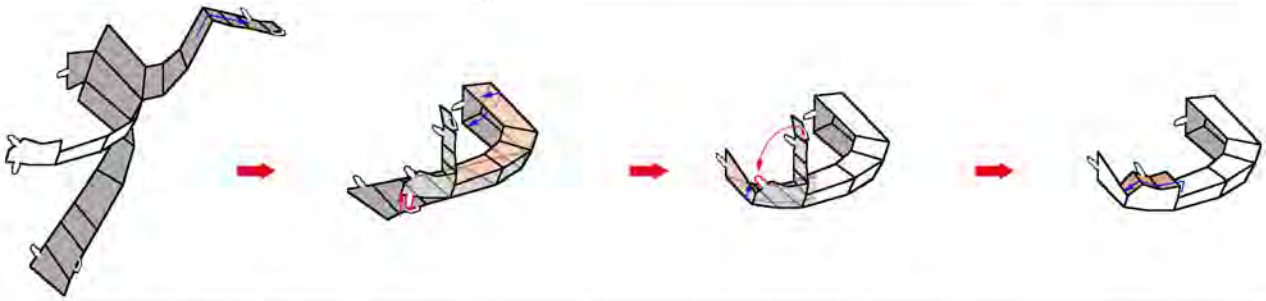

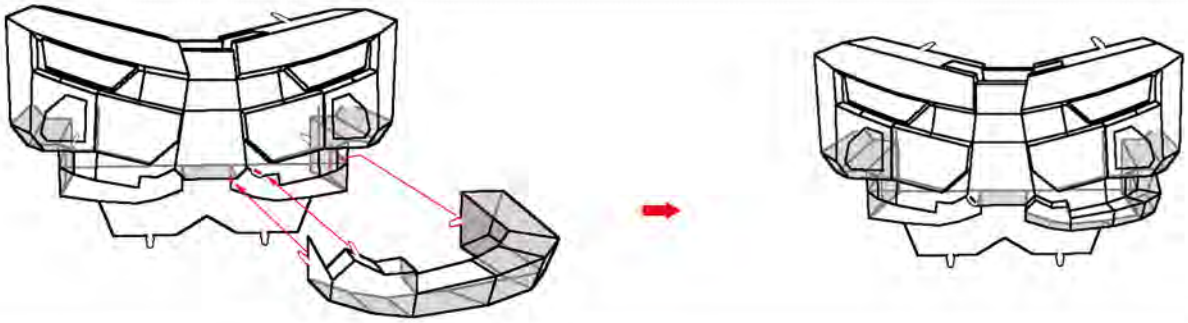

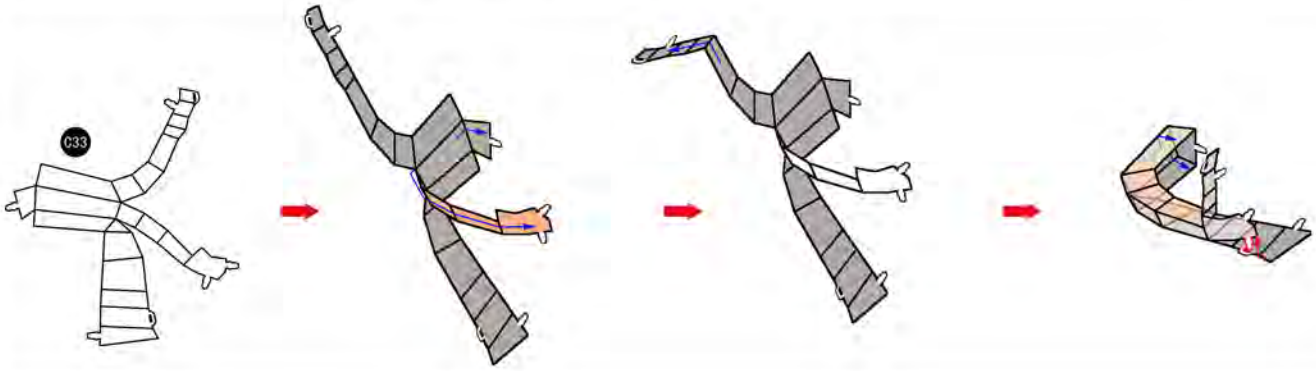
D33

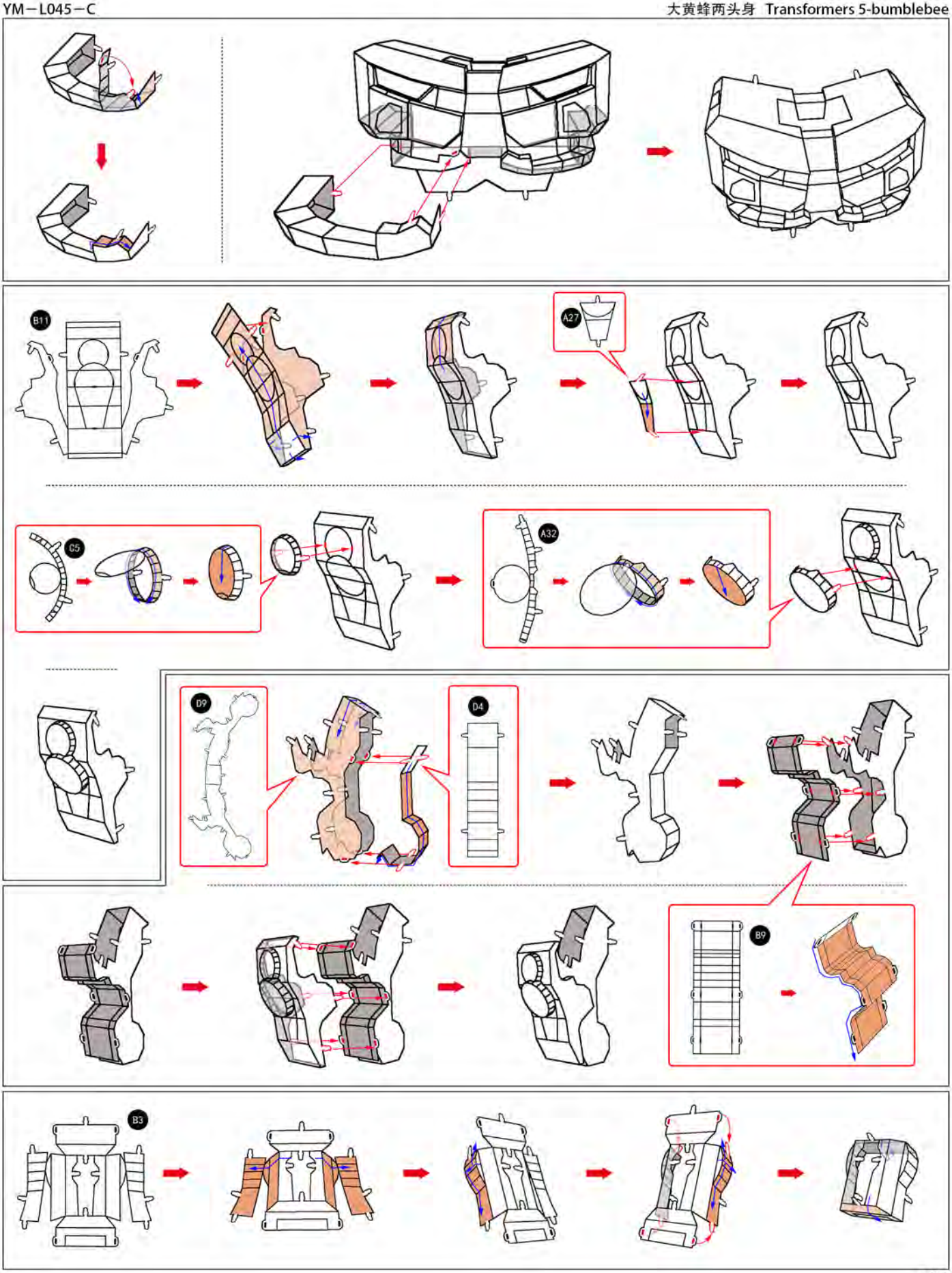
B11
A27
C5
A32
D9
D4
B9
B3

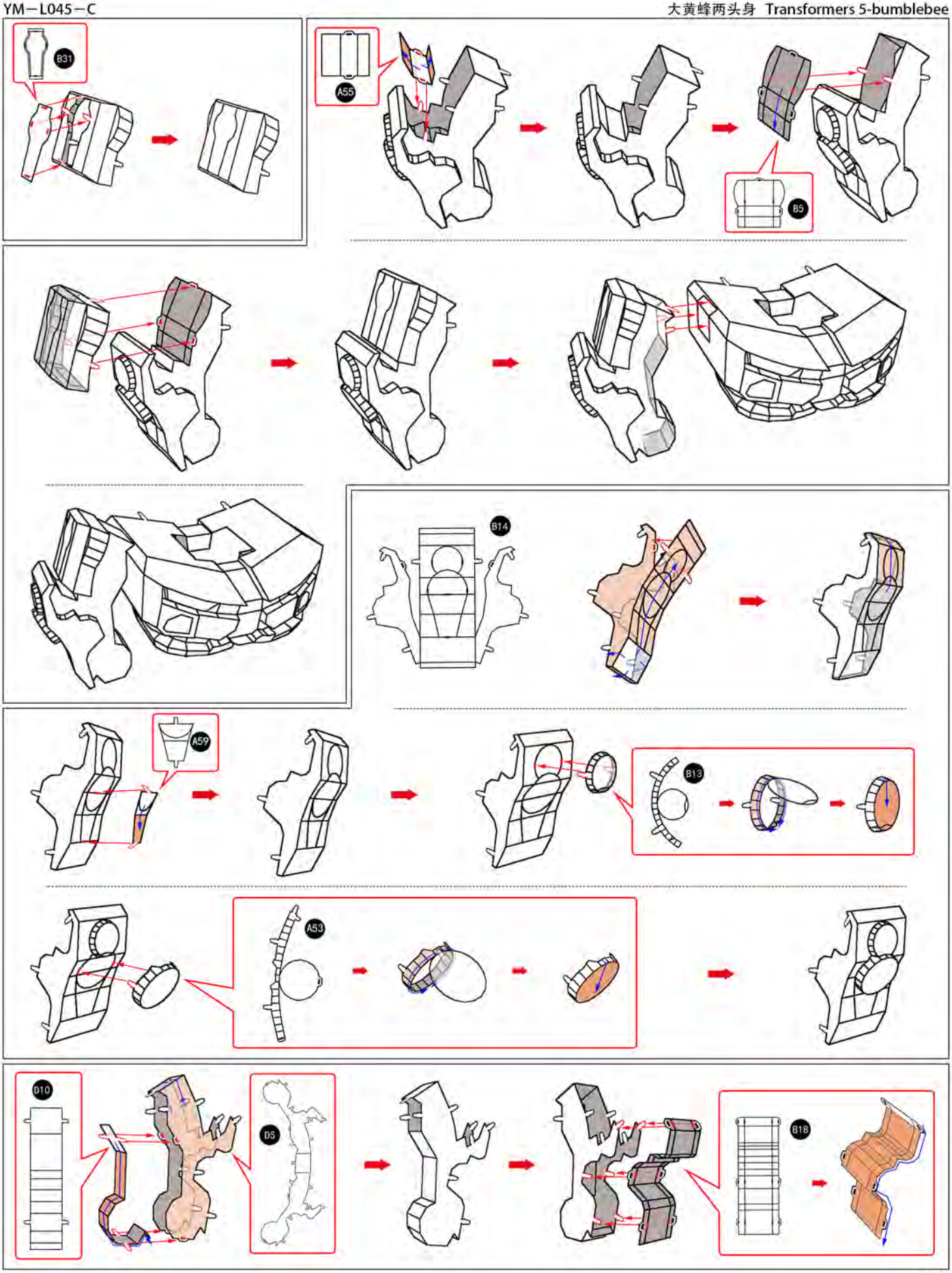
B31
A55
B5
B14
A59
B13
A53
D10
D5
B18

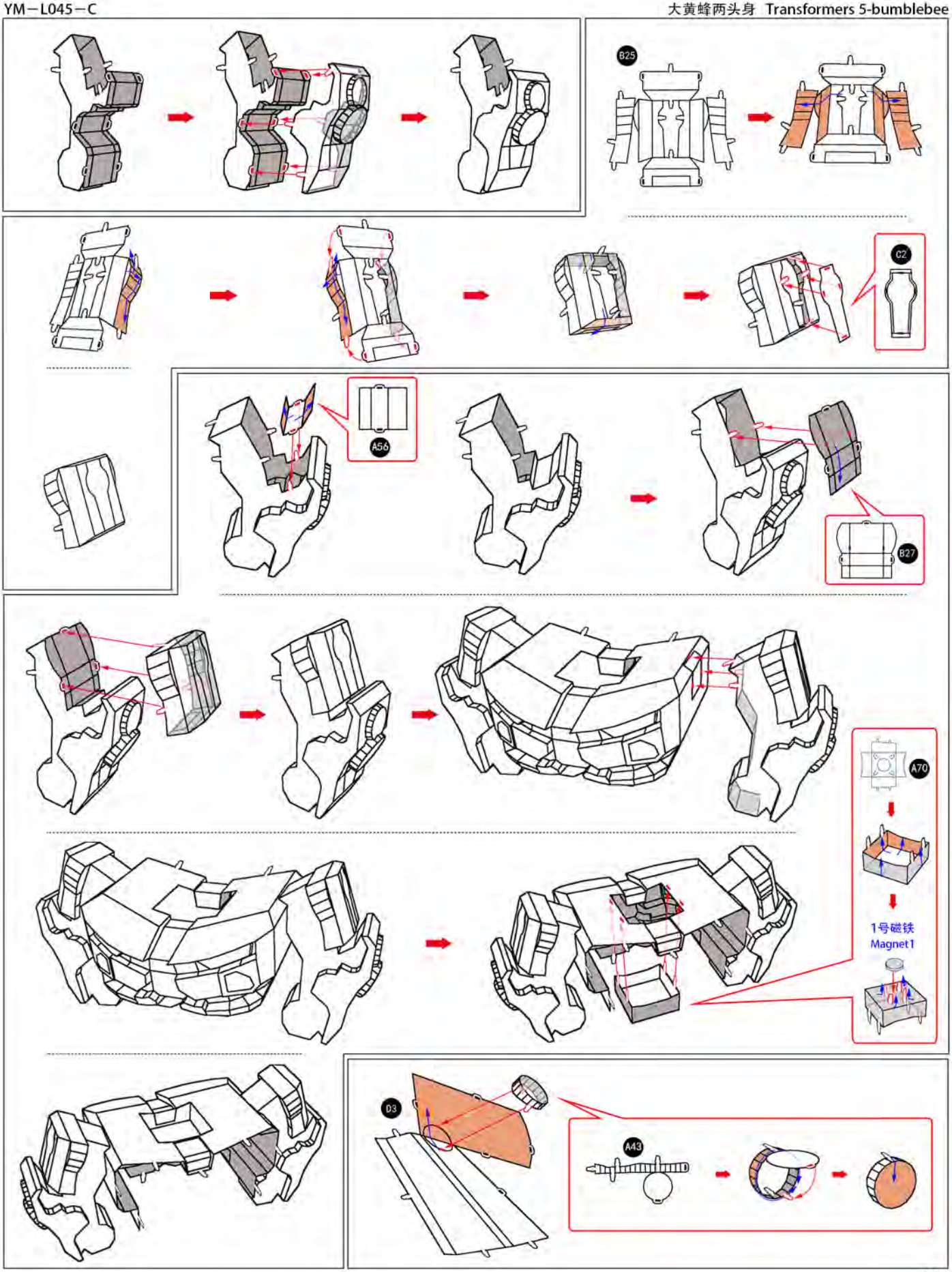
B25
C2
A56
B27
A70
1号磁铁
Magnet1
D3
A43

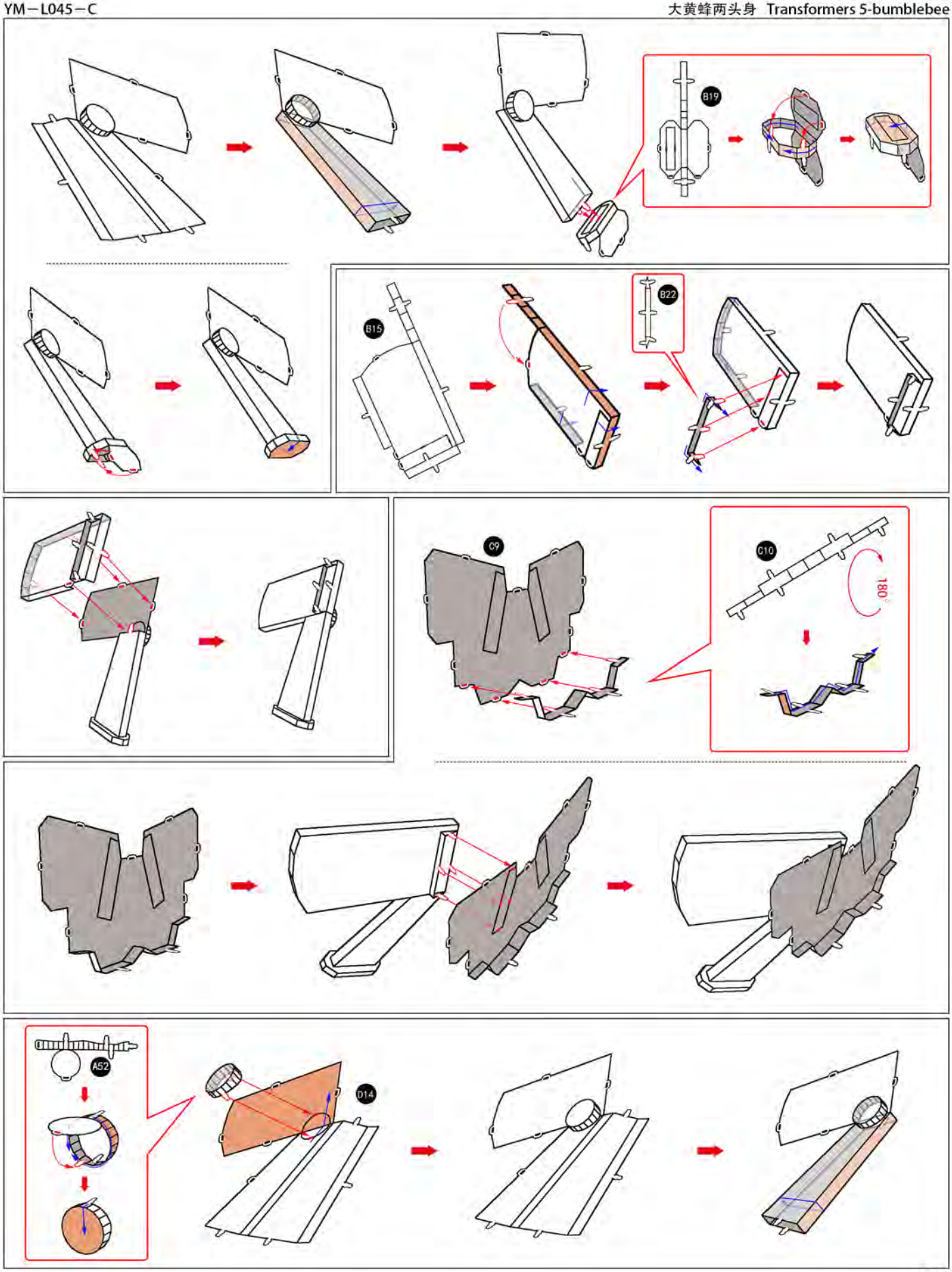
B19
B15
B22
C9
C10
180°
A52
D14

Licensed By:

HASBRO and its logo and TRANSFORMERS,the logo and all related characters are trademarks of Hasbro and used with permission.
© 2017 Hasbro.All Rights Reserved.