艺模
over 14
model·Art
TRANSFORMER
TRANSFORMERS
THE LAST KNIGHT
擎天柱
OPTIMUS PRIME
YM-L046-C

成品示意图 360° VIEW PICTURE

组装基本步骤示意图 BASIC ASSEMBLING STEPS

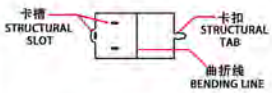

固定方式一:
将卡扣穿过对应固定孔,
按对应角度曲折（图一）
Fitting method 1:
put the tab in the slot,
bend properly(p1)

固定方式二:
将卡扣穿过对应固定孔,
用钳子类工具垂直扭曲固定卡扣（图二）
Fitting method 2:
put the tab in the slot,
bend the tab vertically with plier(p2).

折弯面
Bending surface

纹理面
Textured surface

非纹理面
Non - textured surface

⚠ 磁铁分两种，大磁铁和小磁铁
Two kinds of magnets, big magnets and small magnets

⚠ 注意拼装前带手指套
Take finger cots before assembly

⚠ 注意磁极
Attention magnetic pole

○ 备份零件
Backup parts

金属部件A METAL SHEET-A

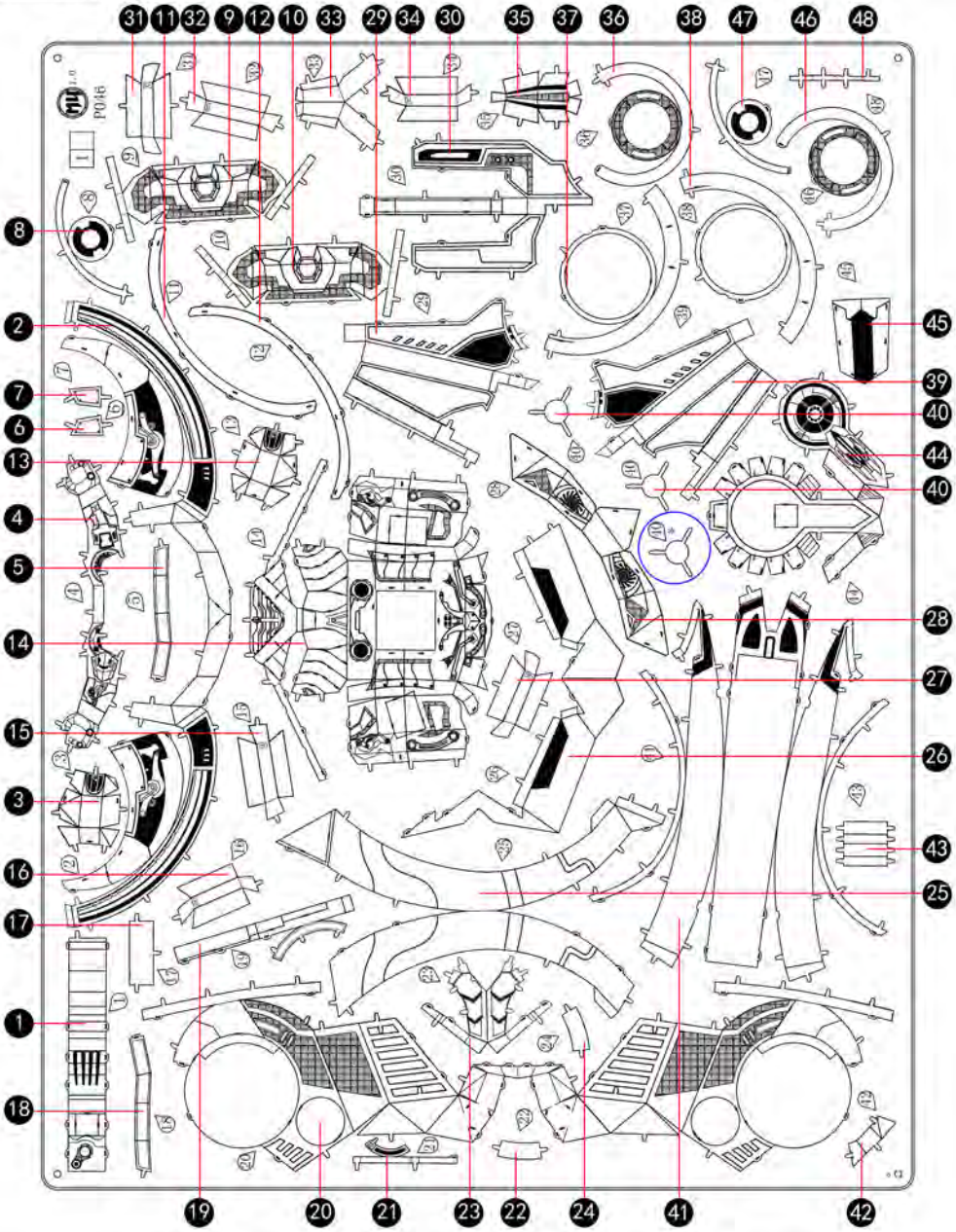

金属部件B METAL SHEET-B

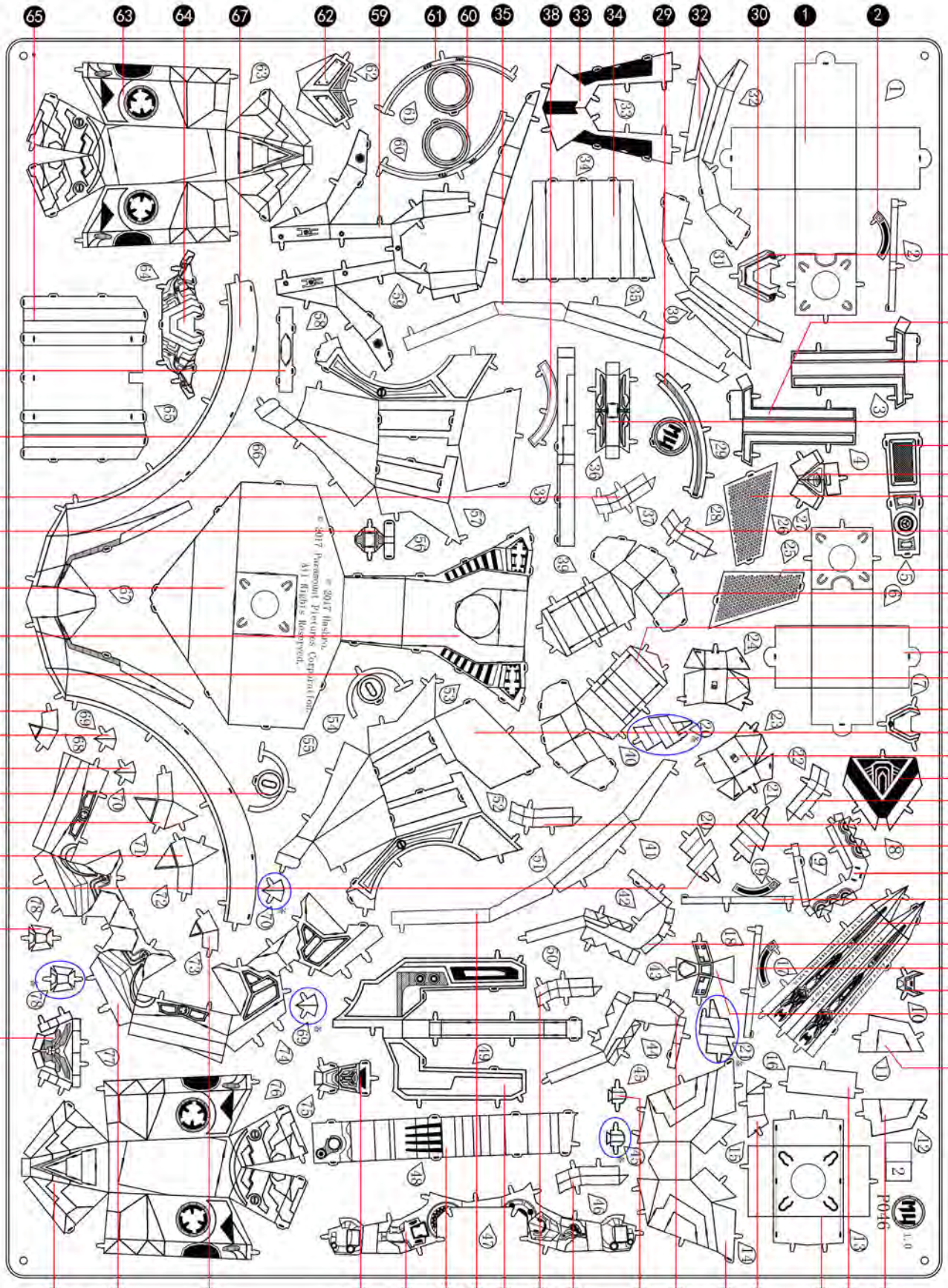

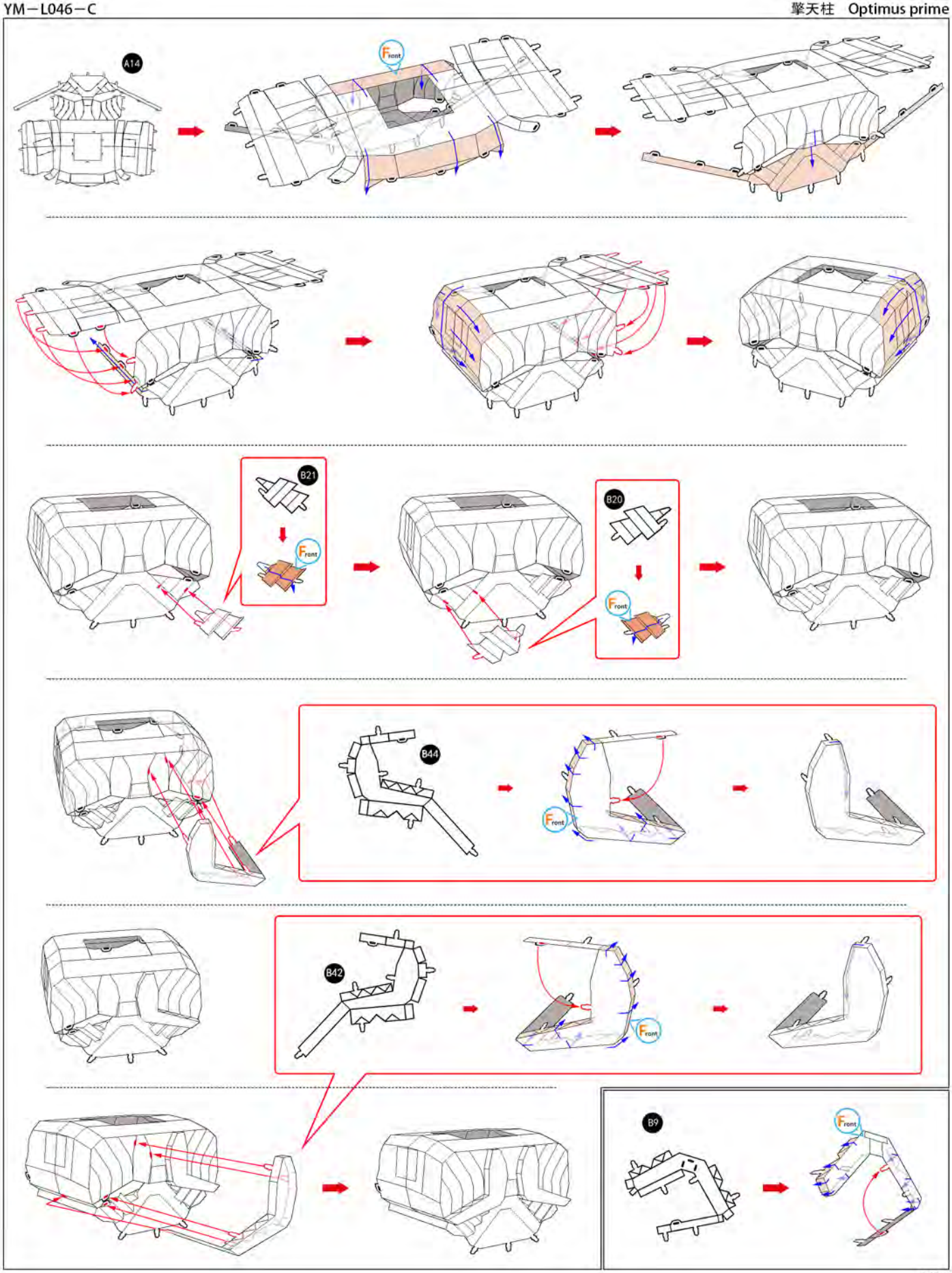
A14
Front
B21
Front
B20
Front
B44
Front
B42
Front
B9
Front

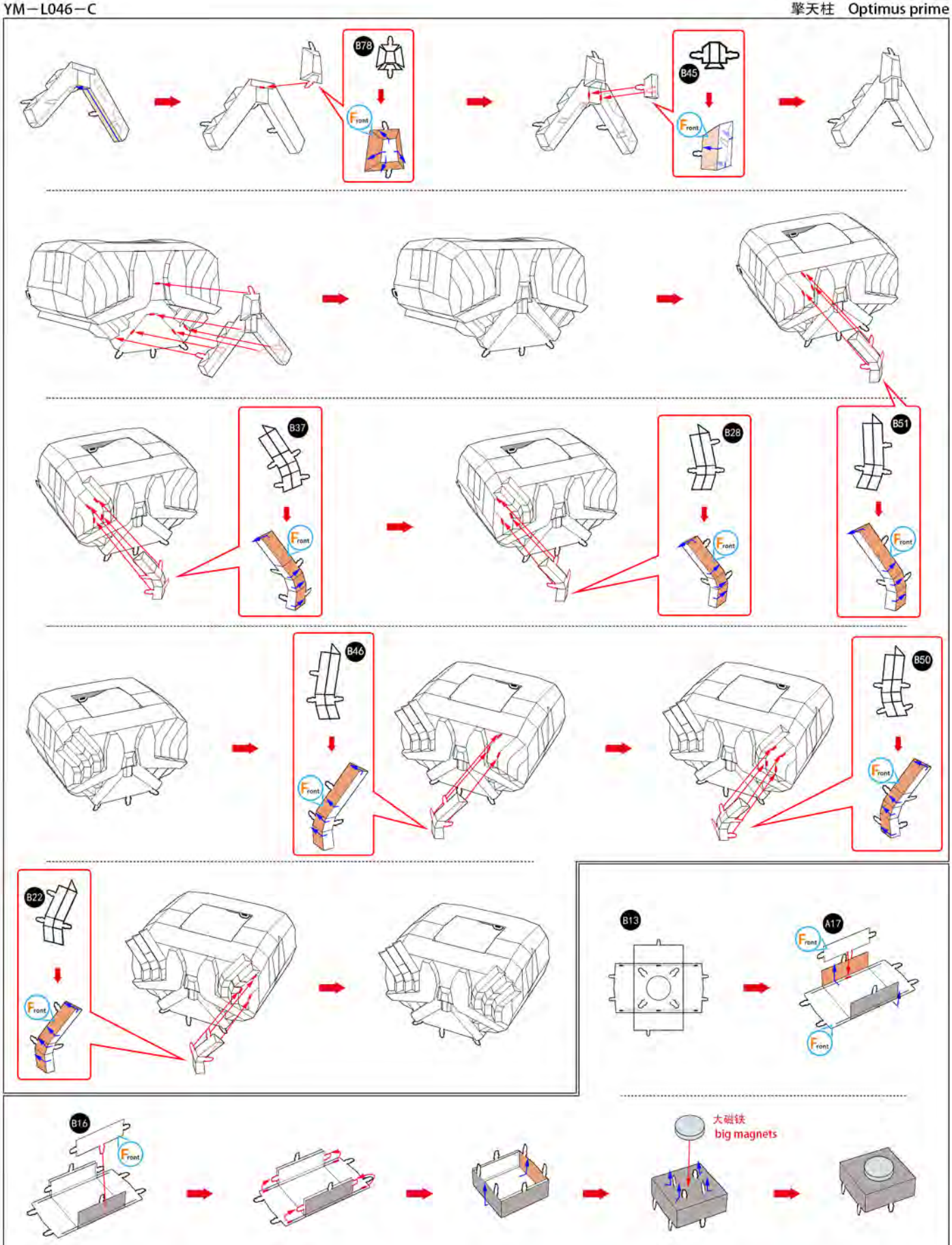
B78
Front
B45
Front
B37
Front
B28
Front
B51
Front
B46
Front
B50
Front
B22
Front
B13
A17
Front
Front
B16
Front
大磁铁
big magnets

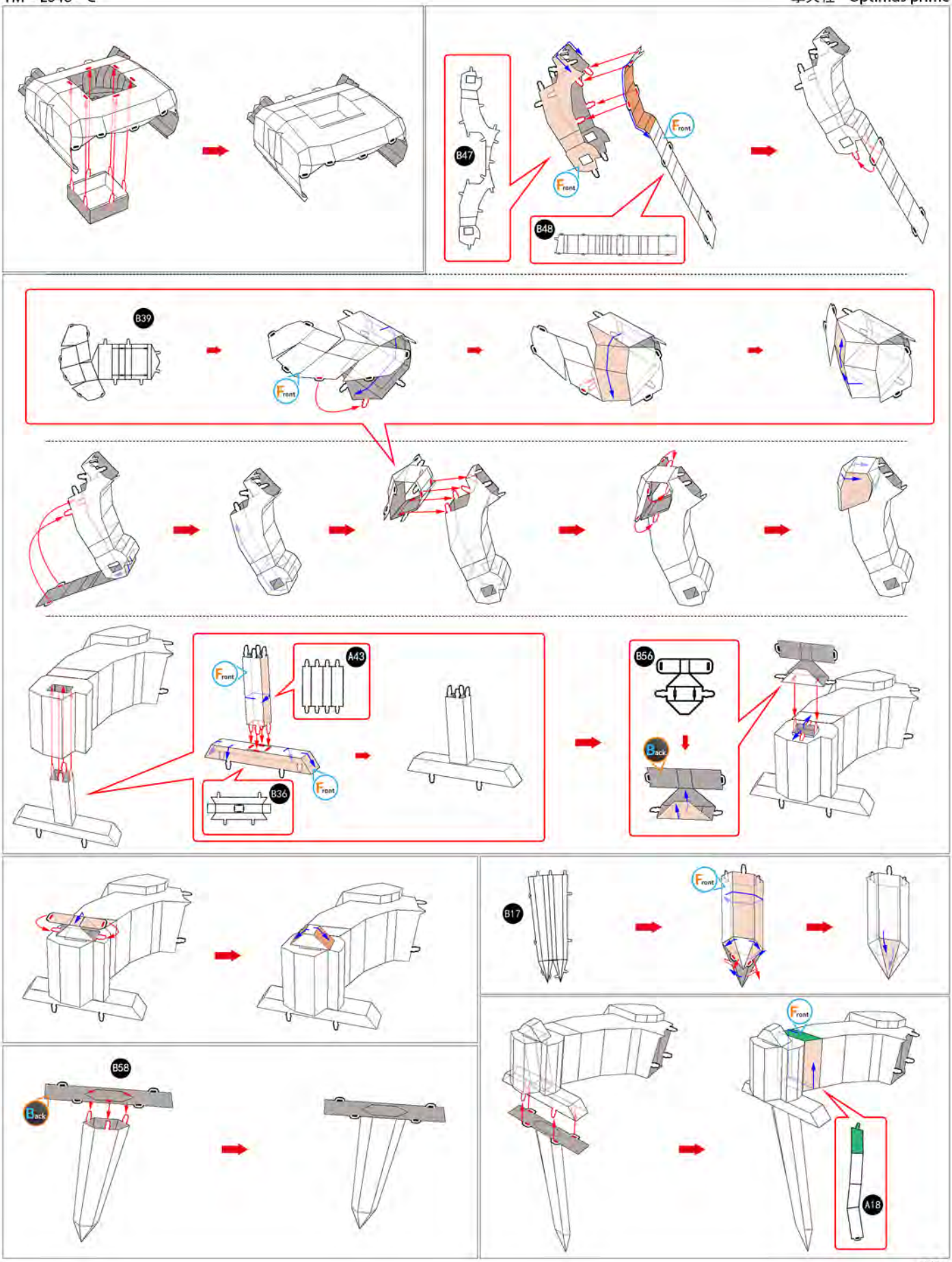
B47
Front
Front
B48
B39
Front
A43
Front
B36
Front
B56
Back
B17
Front
B58
Back
Front
A18

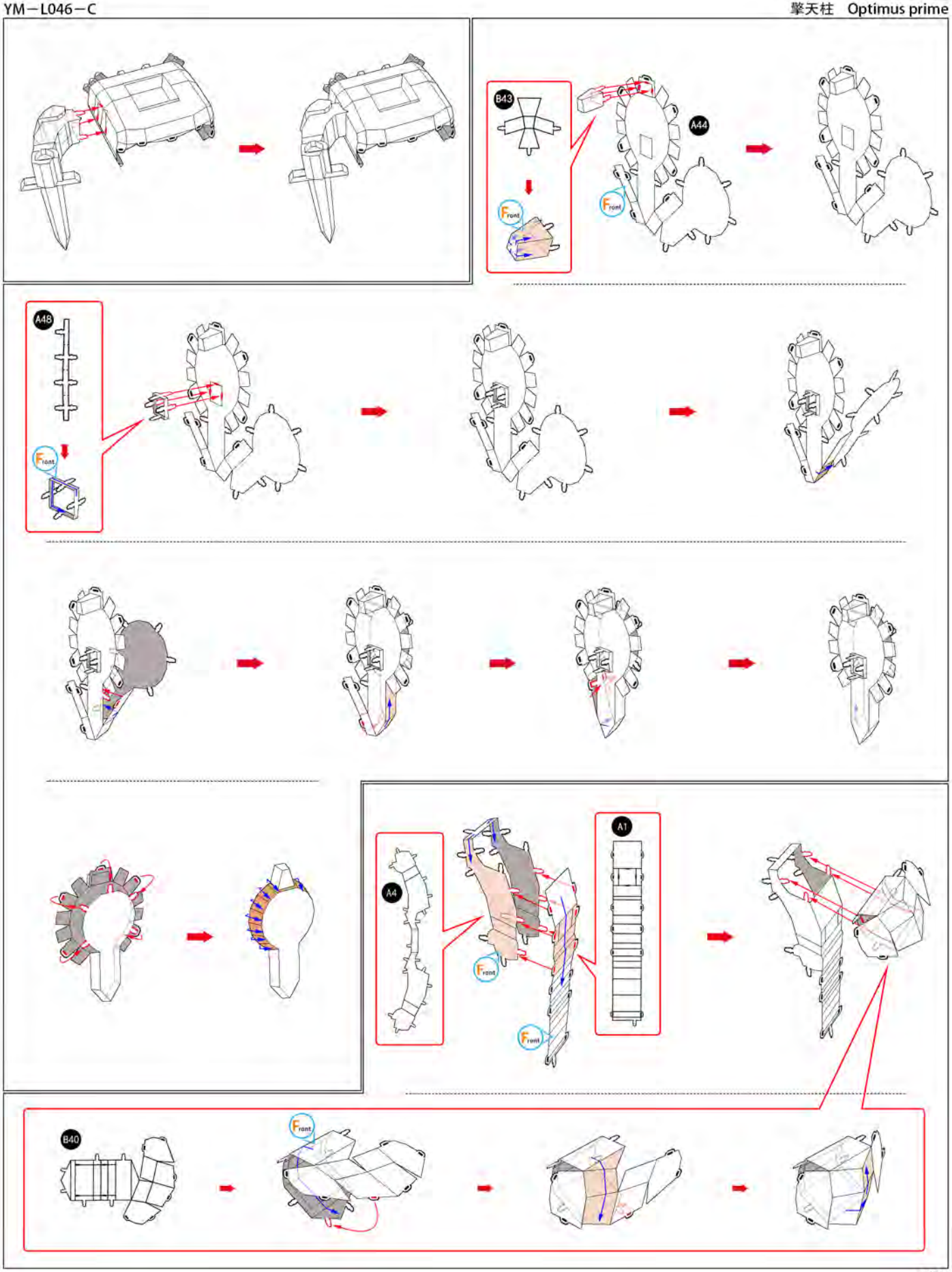
B43
Front
A44
Front
A48
Front
A4
Front
Front
A1
B40
Front

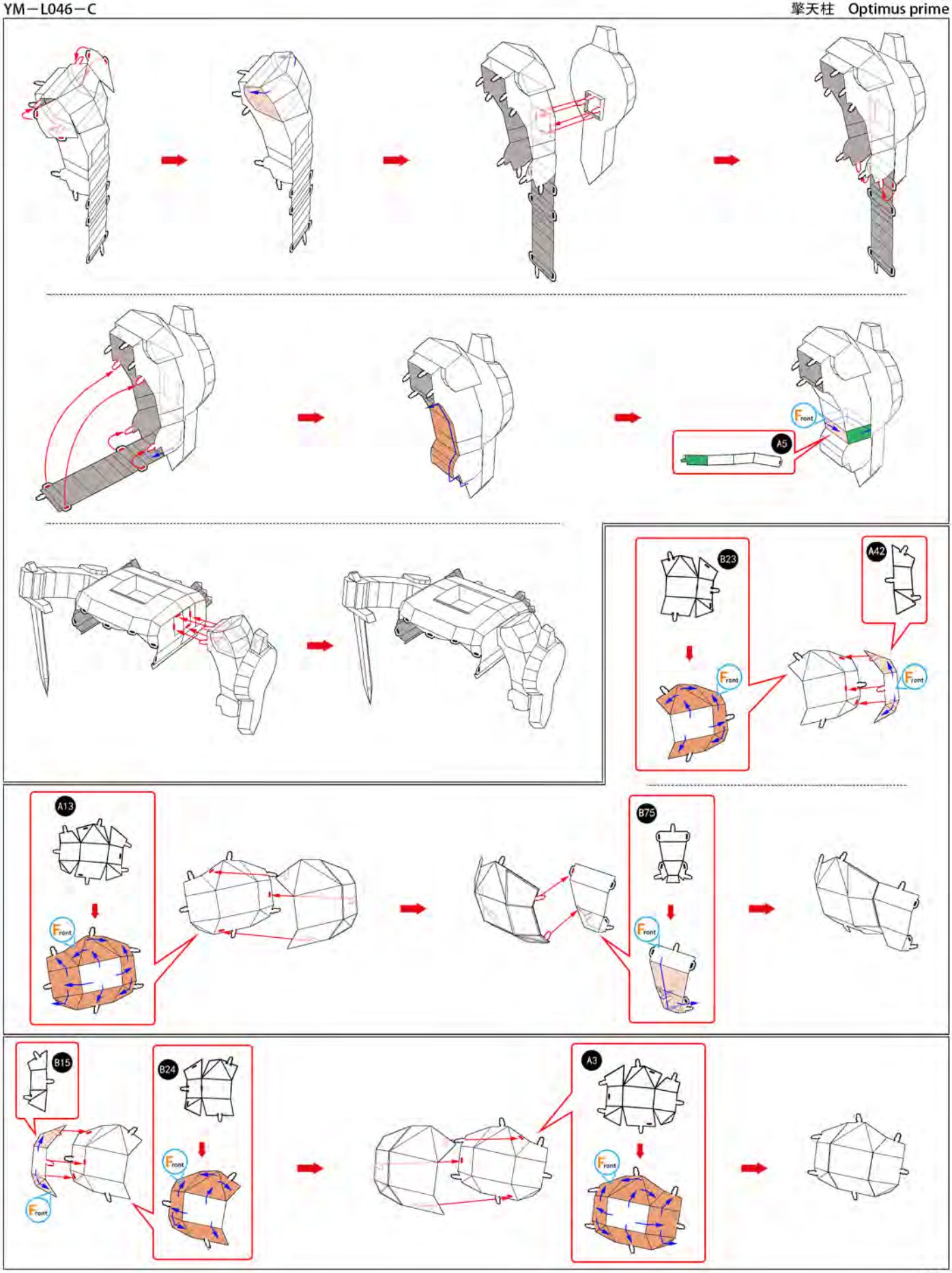
A5
Front
B23
A42
Front
Front
A13
Front
B75
Front
B15
Front
B24
Front
A3
Front

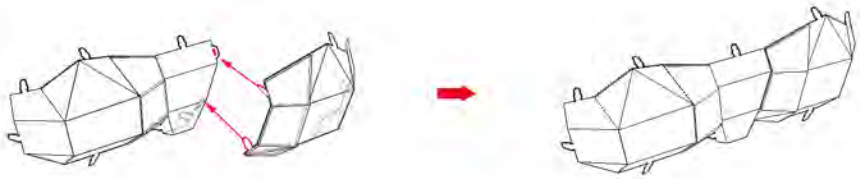

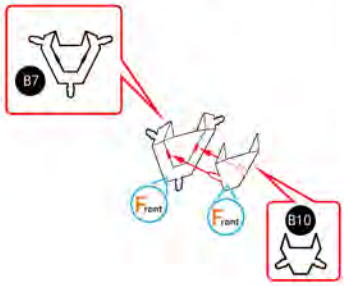
B7
Front
Front
B10

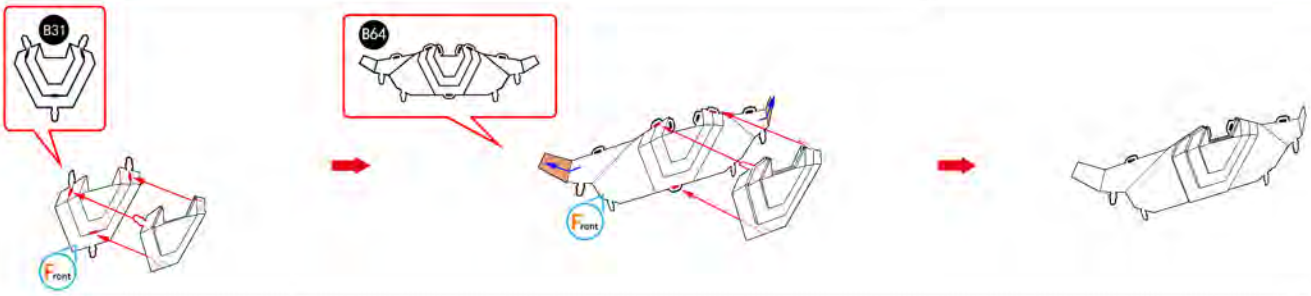
B31
Front
B64
Front

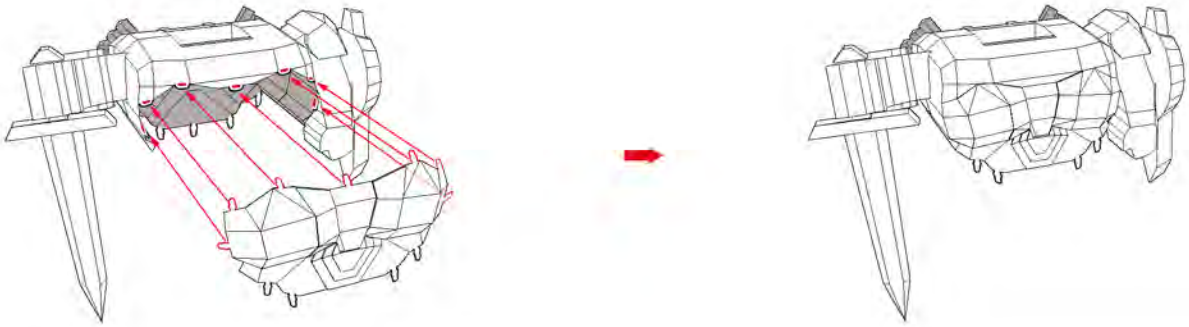

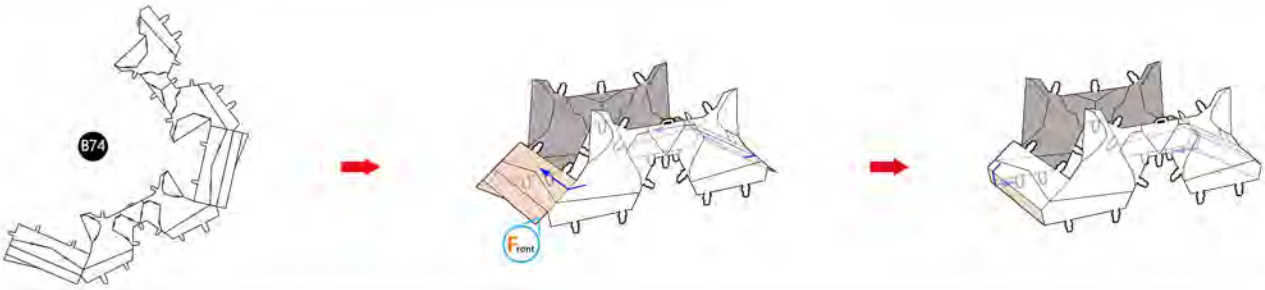
B74
Front

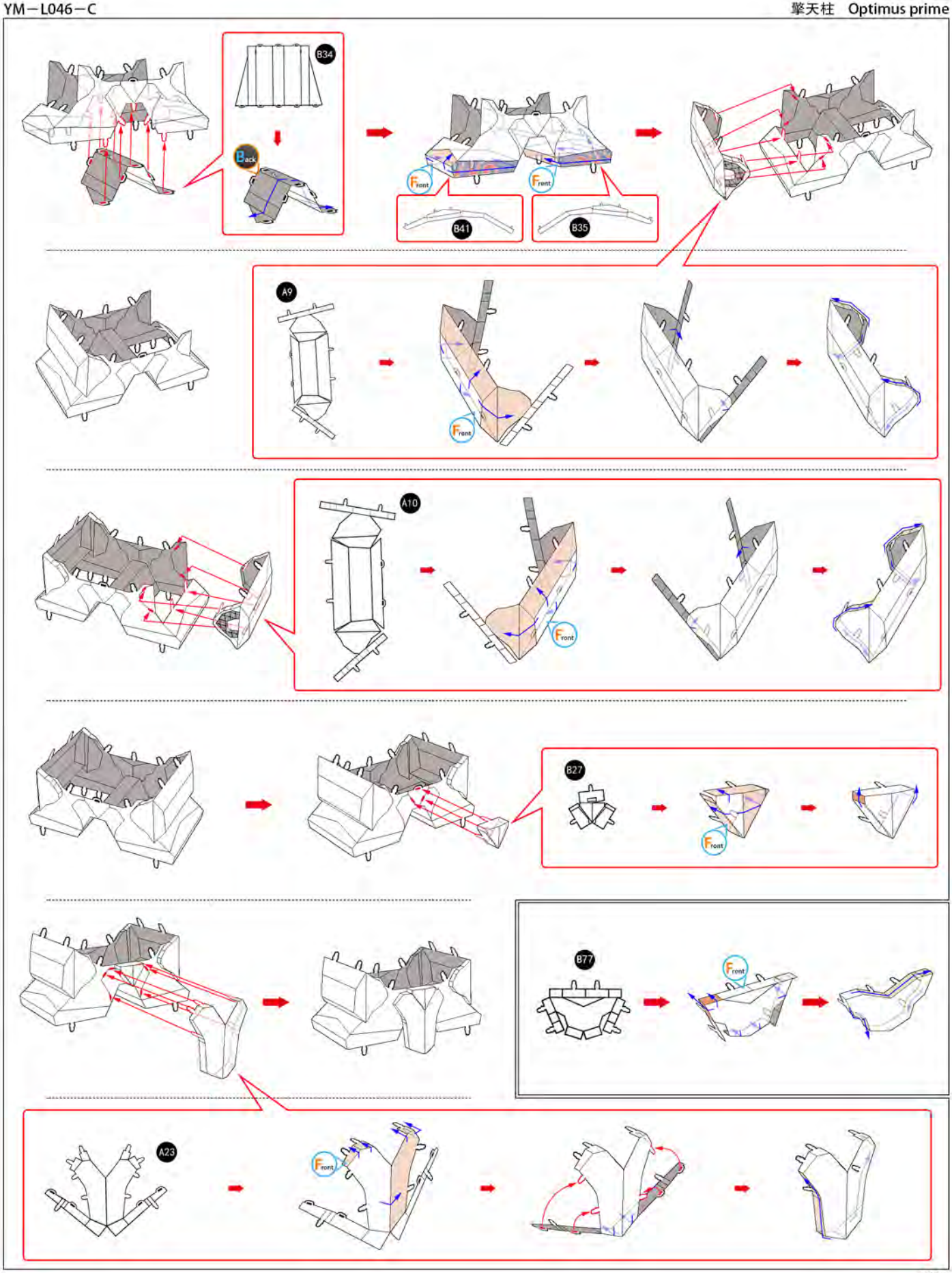
B34
Back
Front
Front
B41
B35
A9
Front
A10
Front
B27
Front
B77
Front
A23
Front

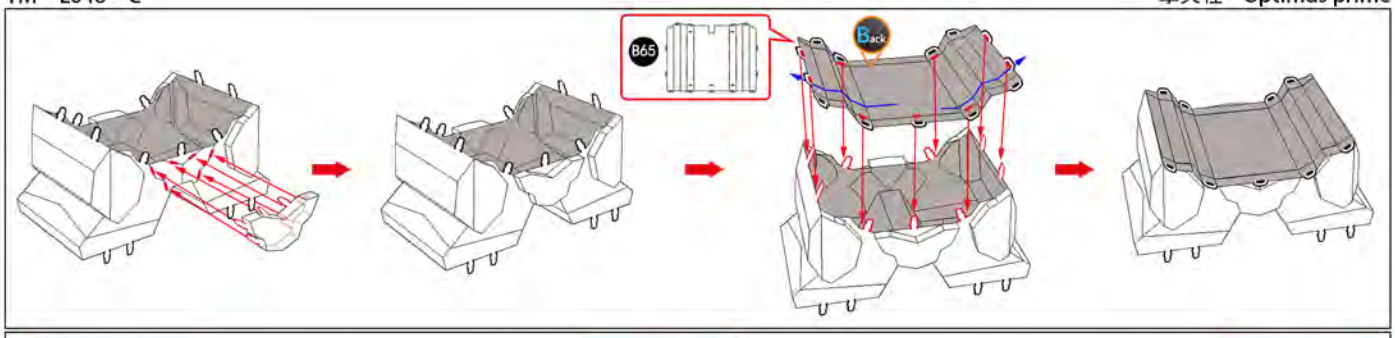
B65
Back

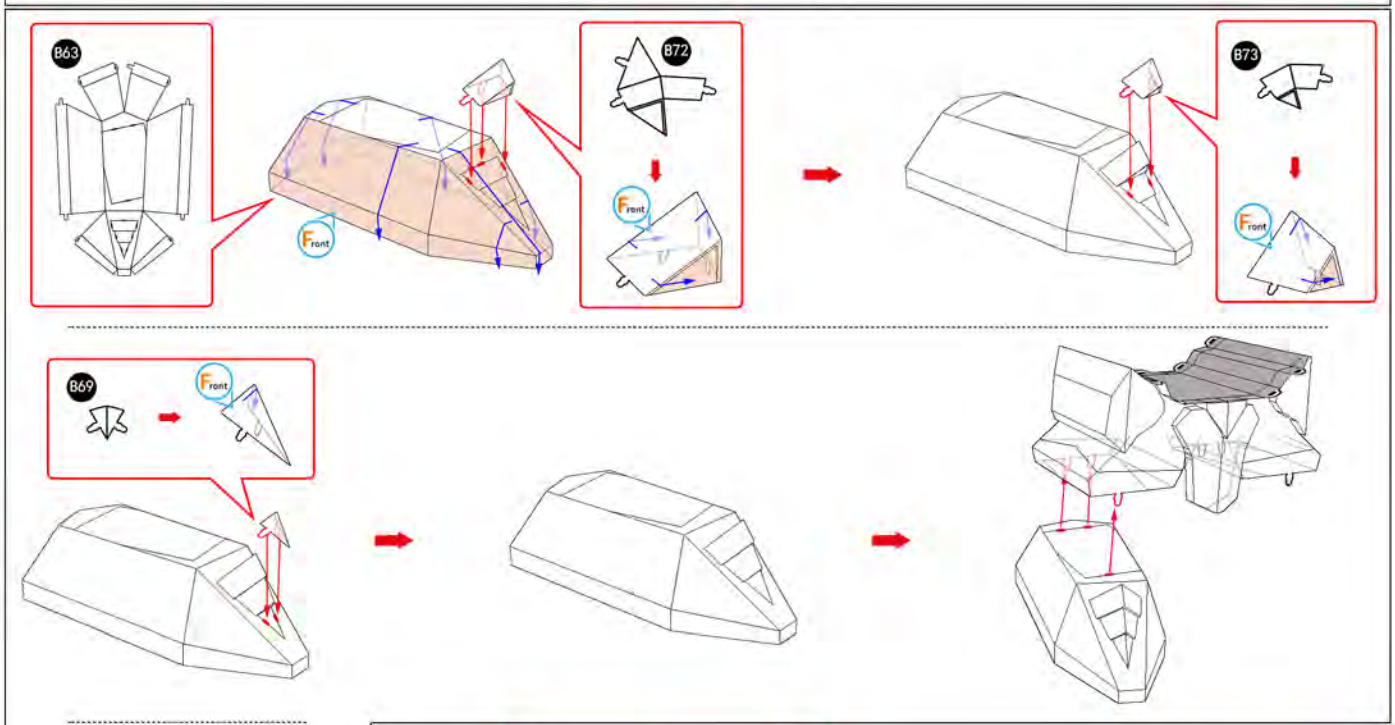
B63
Front
B72
Front
B73
Front
B69
Front

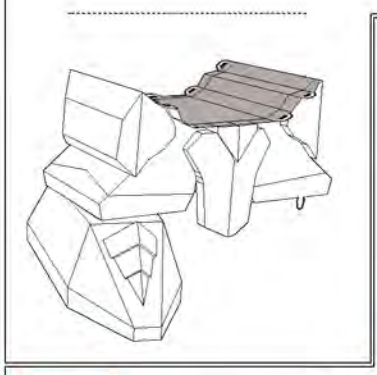

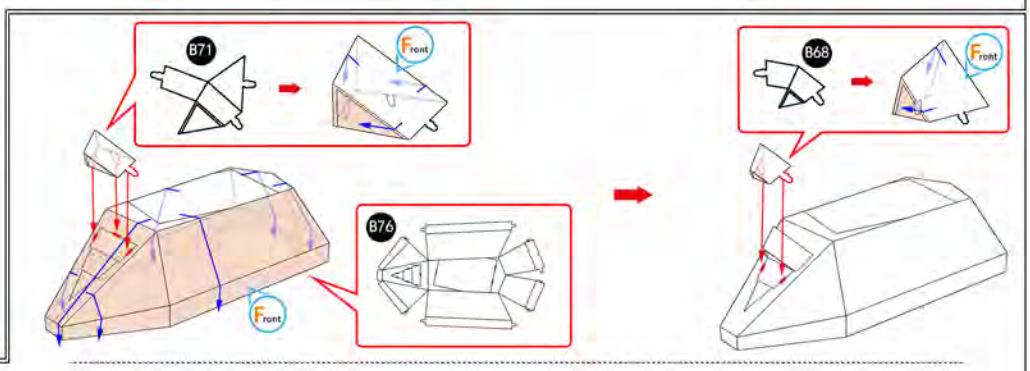
B71
Front
B68
Front
B76
Front

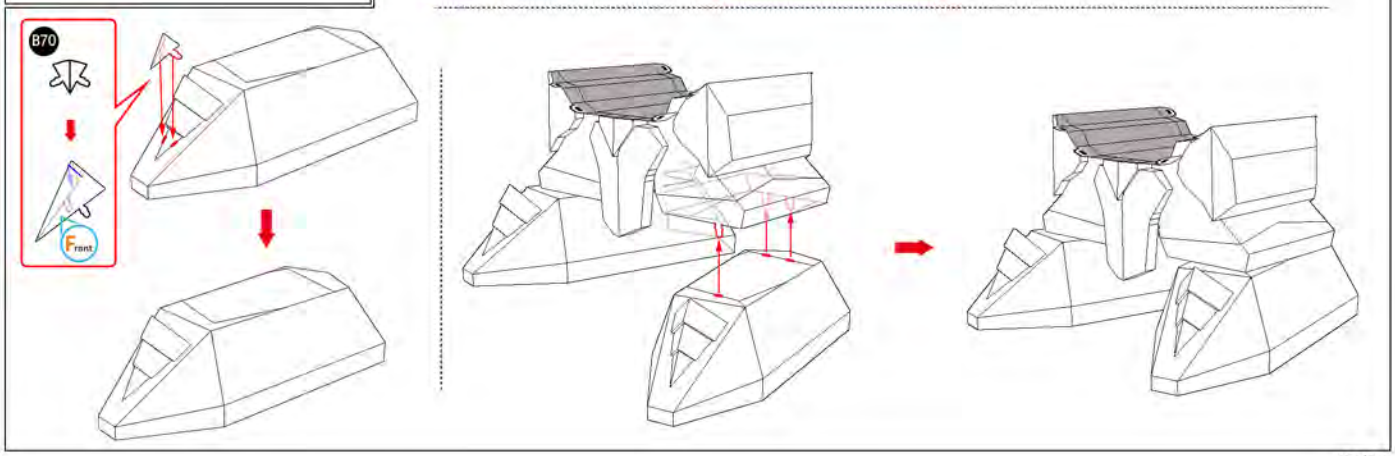
B70
Front

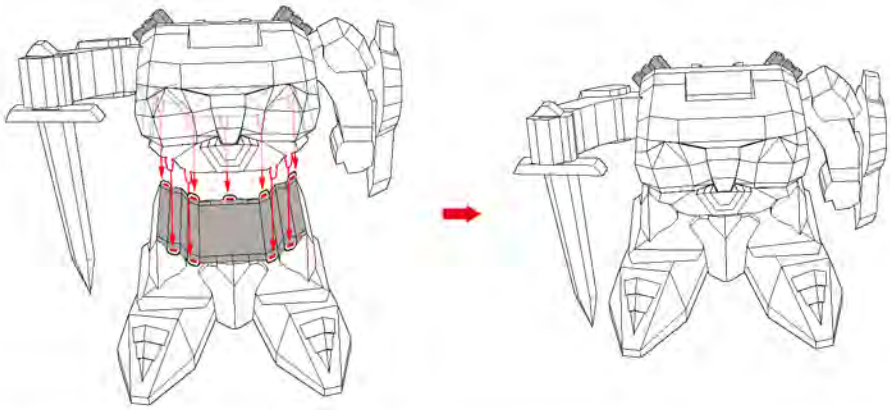

B62
Front

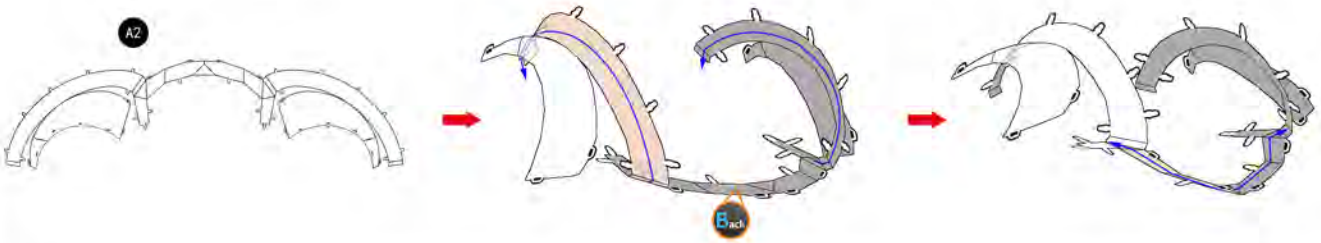
A2
Back

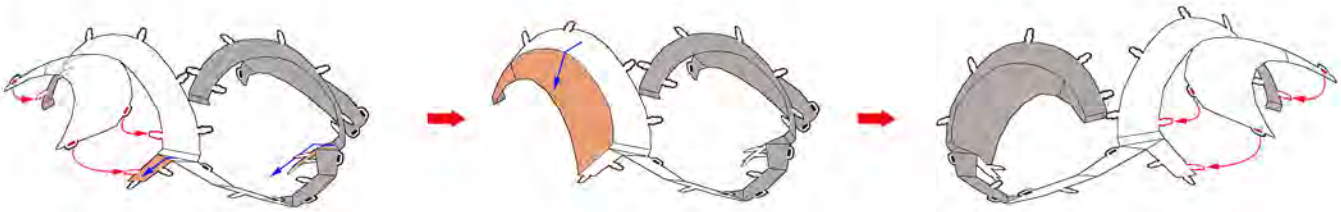

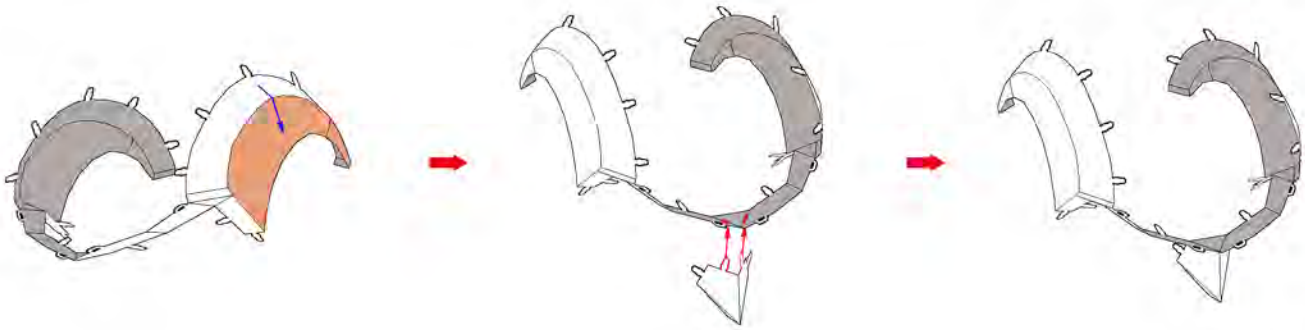

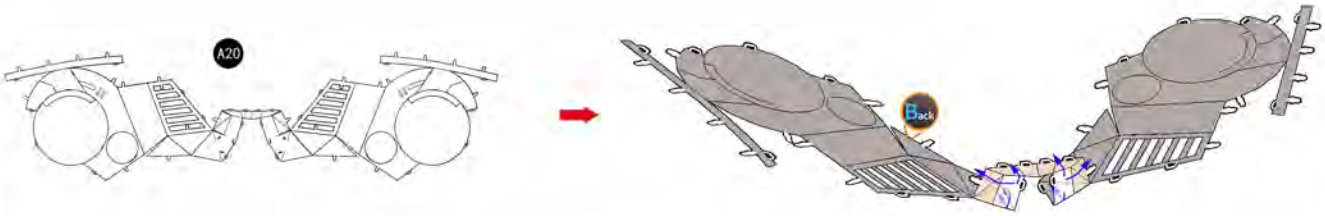
A20
Back

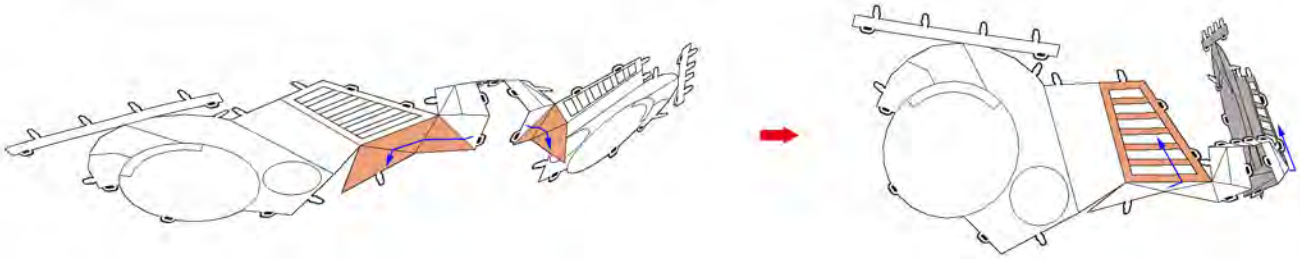

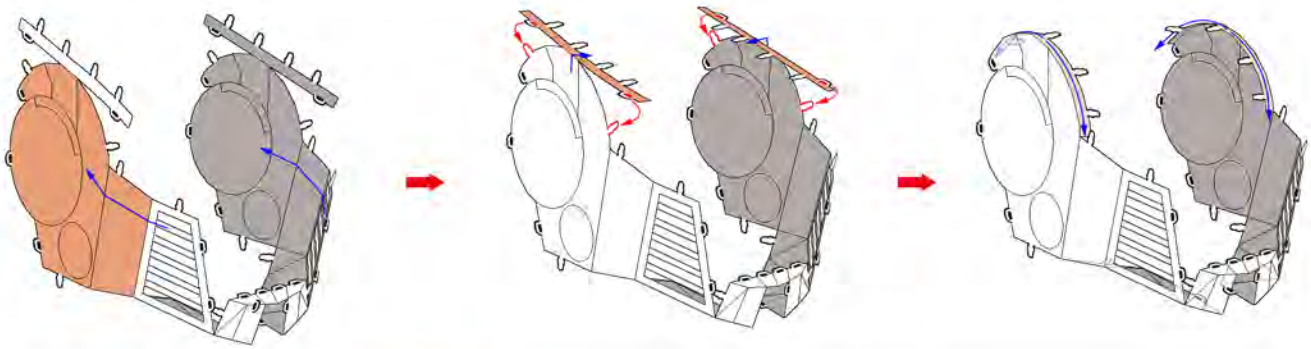

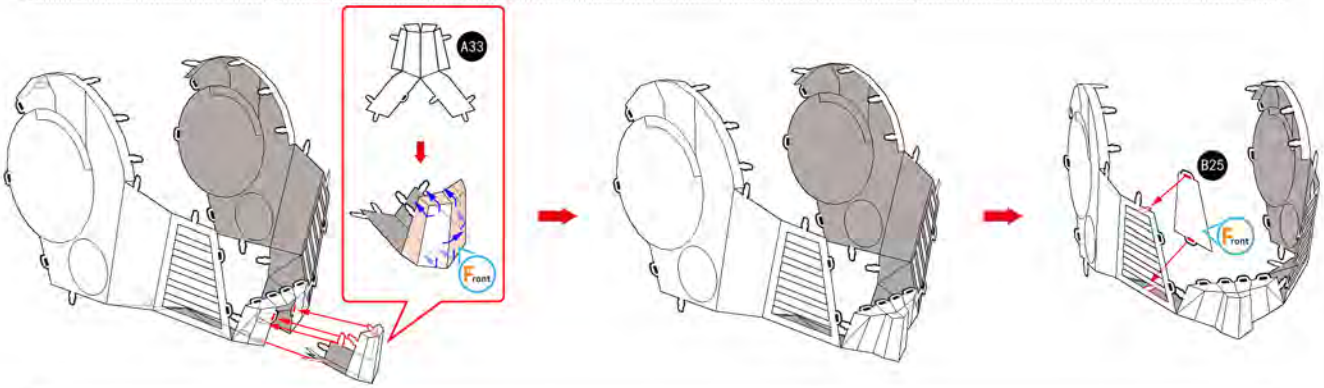
A33
Front
B25
Front

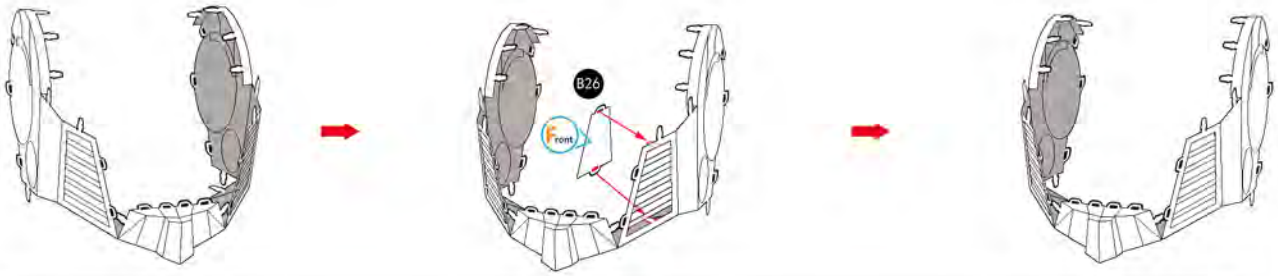
B26
Front

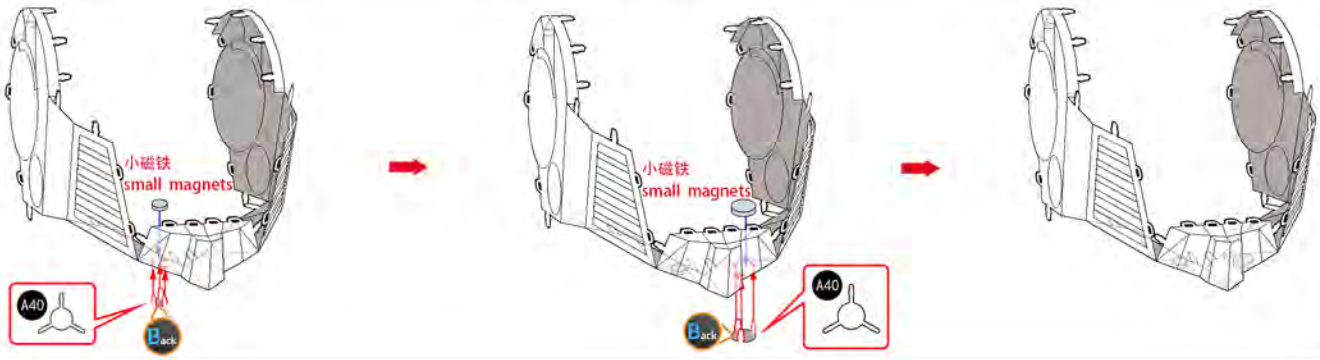
小磁铁
small magnets
A40
Back
小磁铁
small magnets
Back
A40

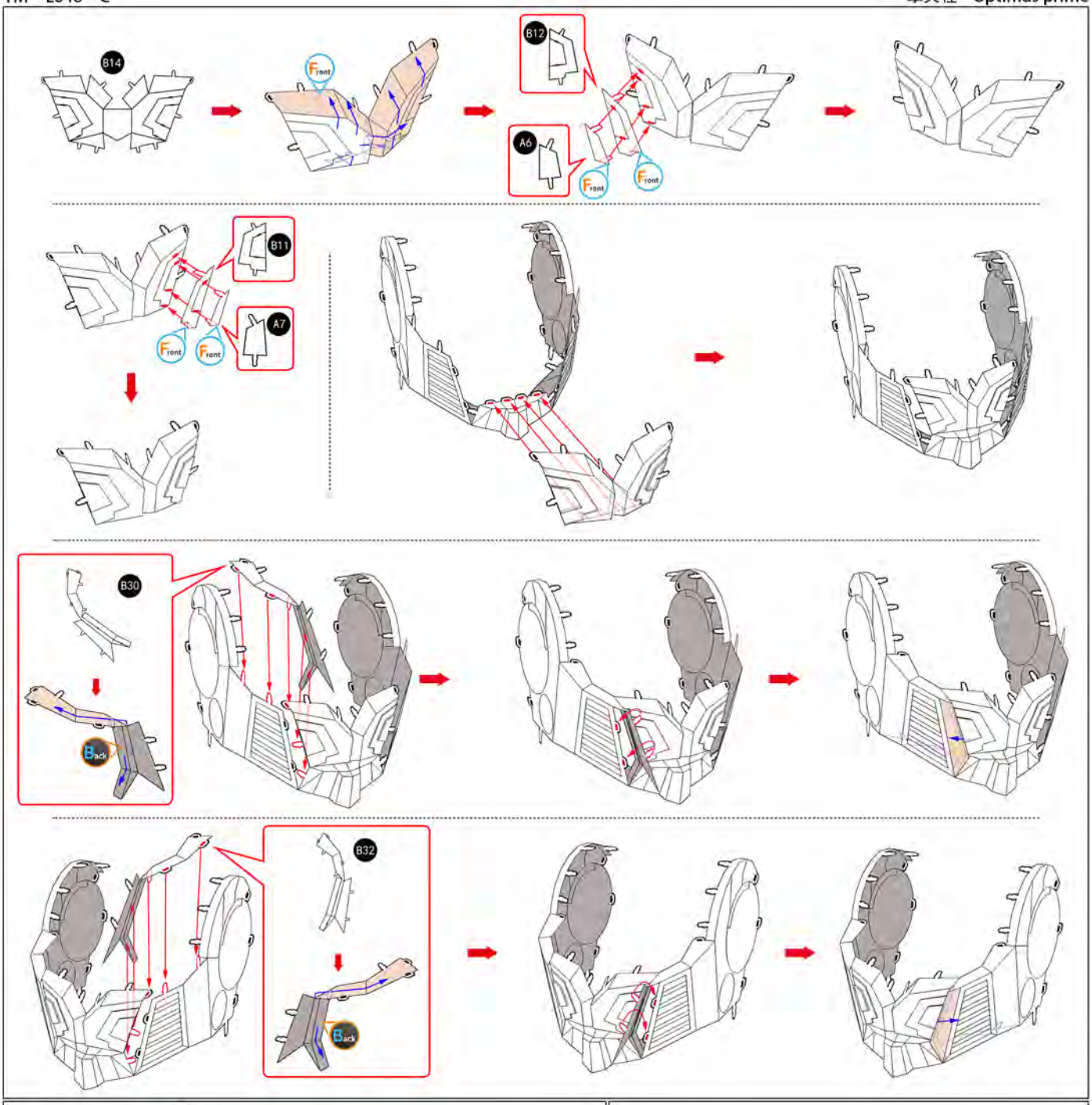
B14
Front
B12
A6
Front
Front
B11
A7
Front
Front
B30
Back
B32
Back

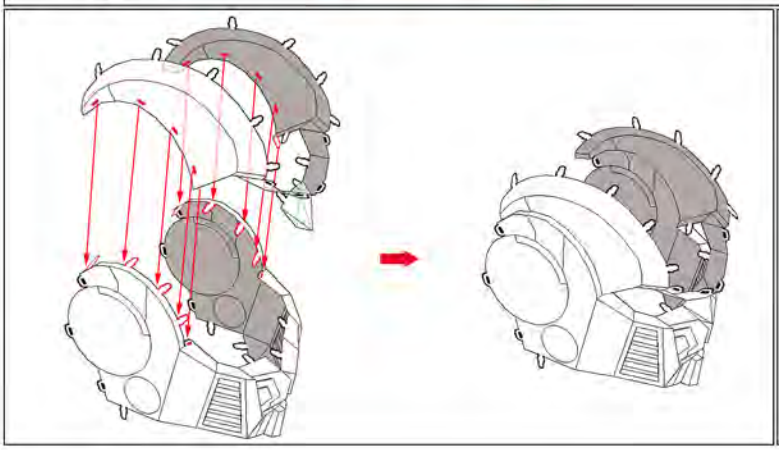

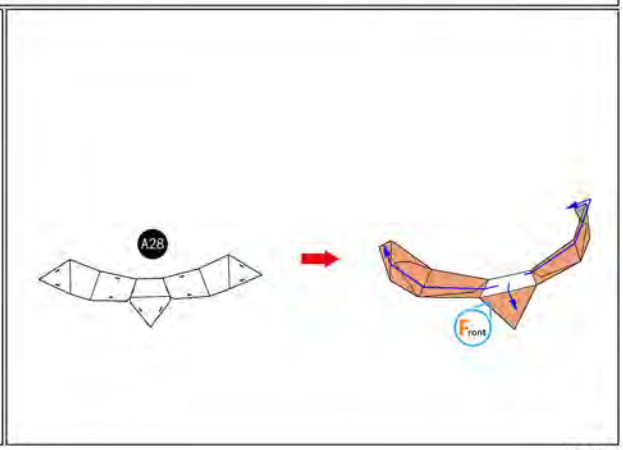
A28
Front

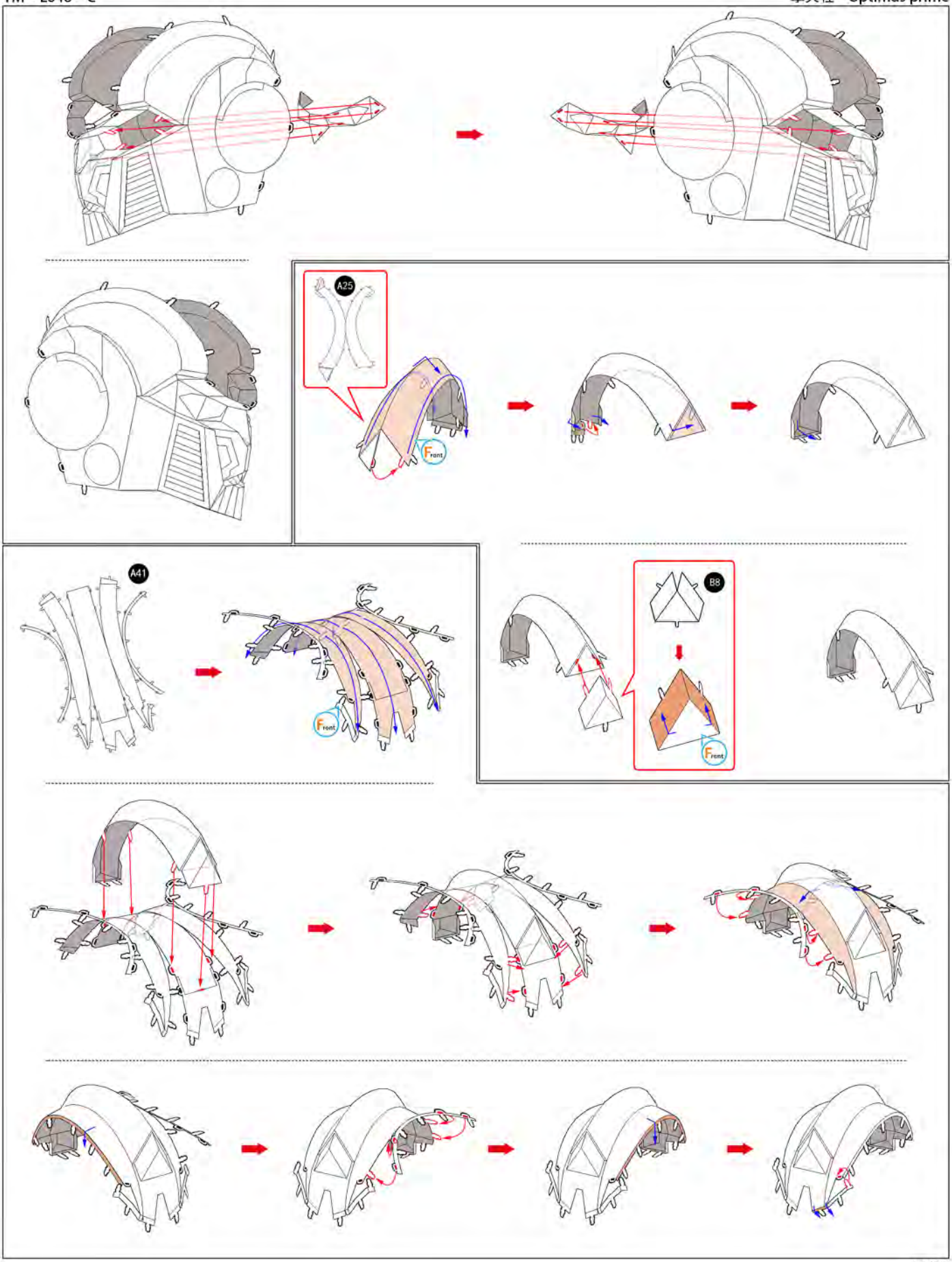
A25
Front
A41
Front
B8
Front

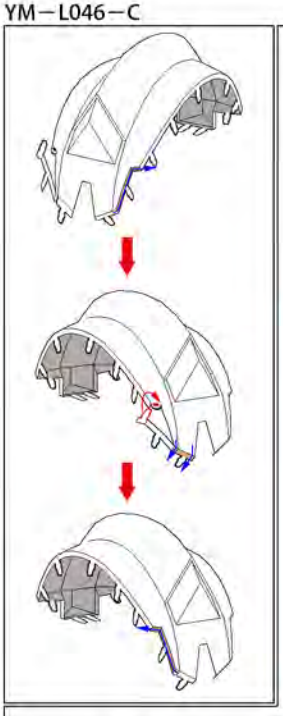

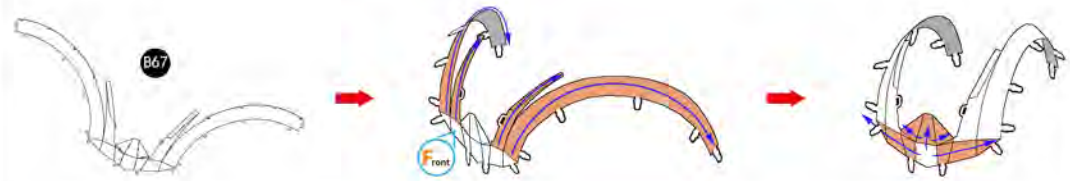
B67
Front

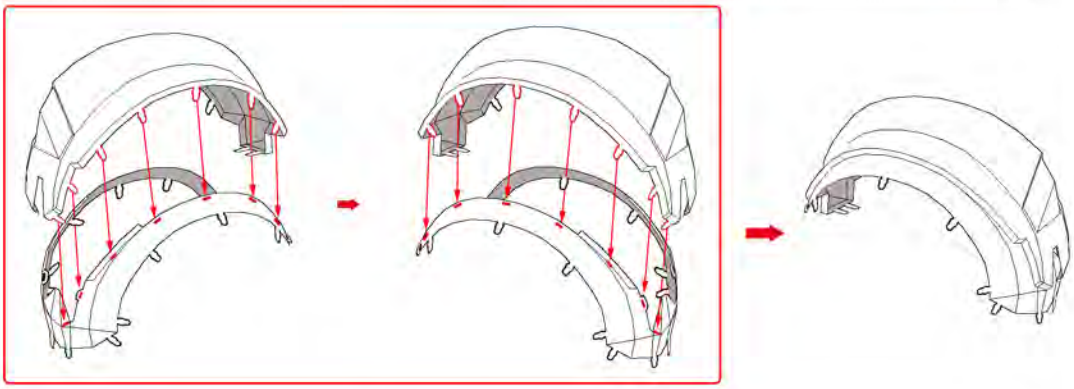

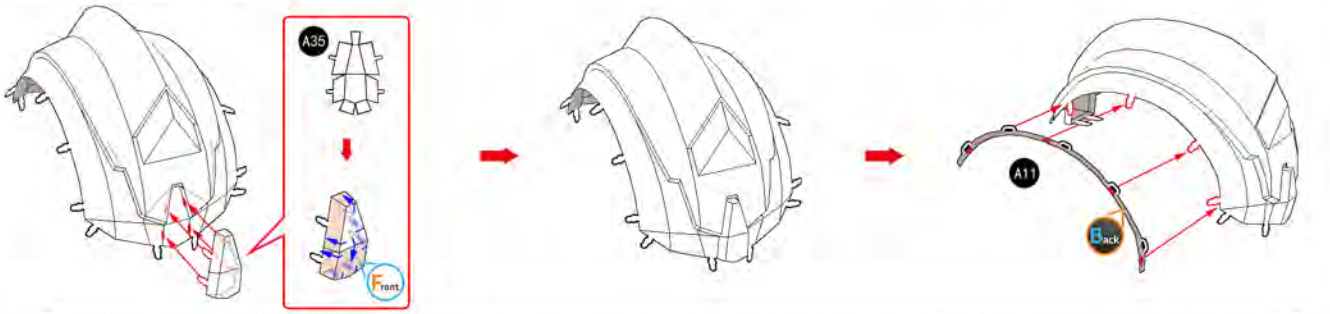
A35
Front
A11
Back

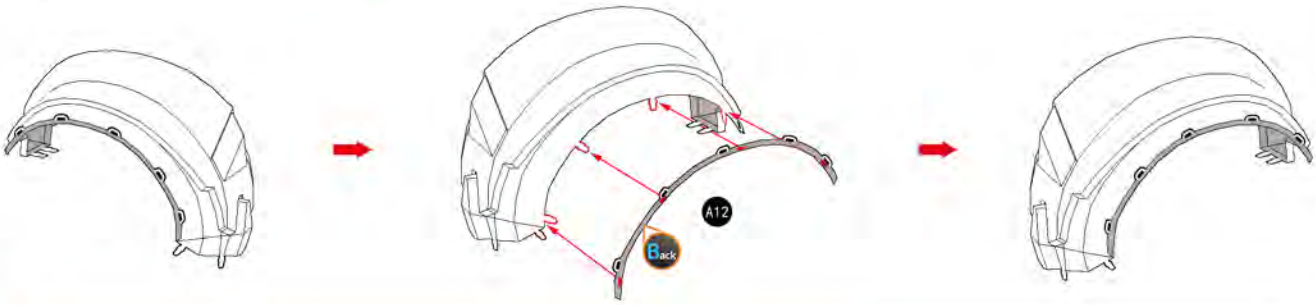
A12
Back

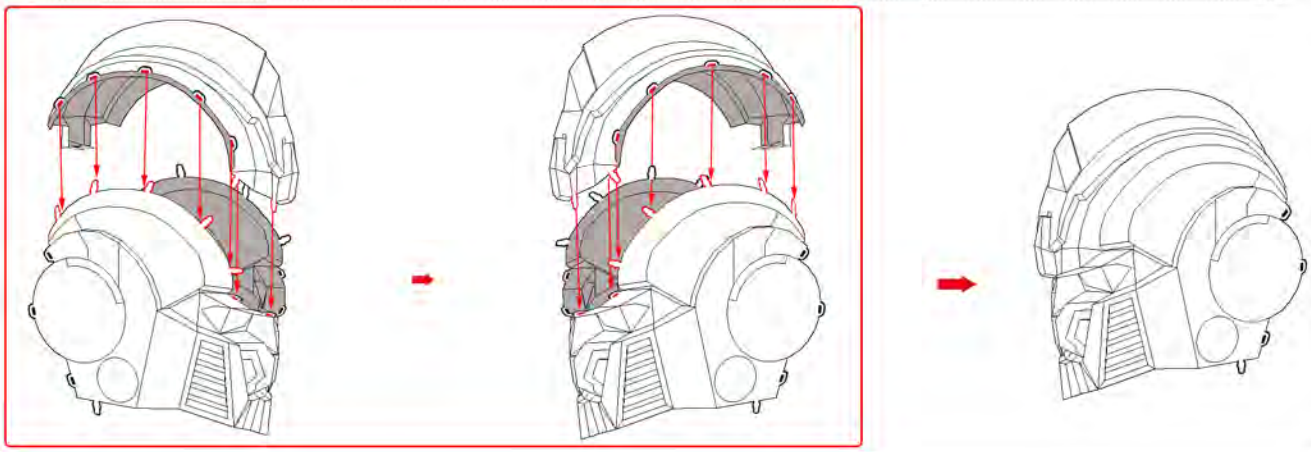

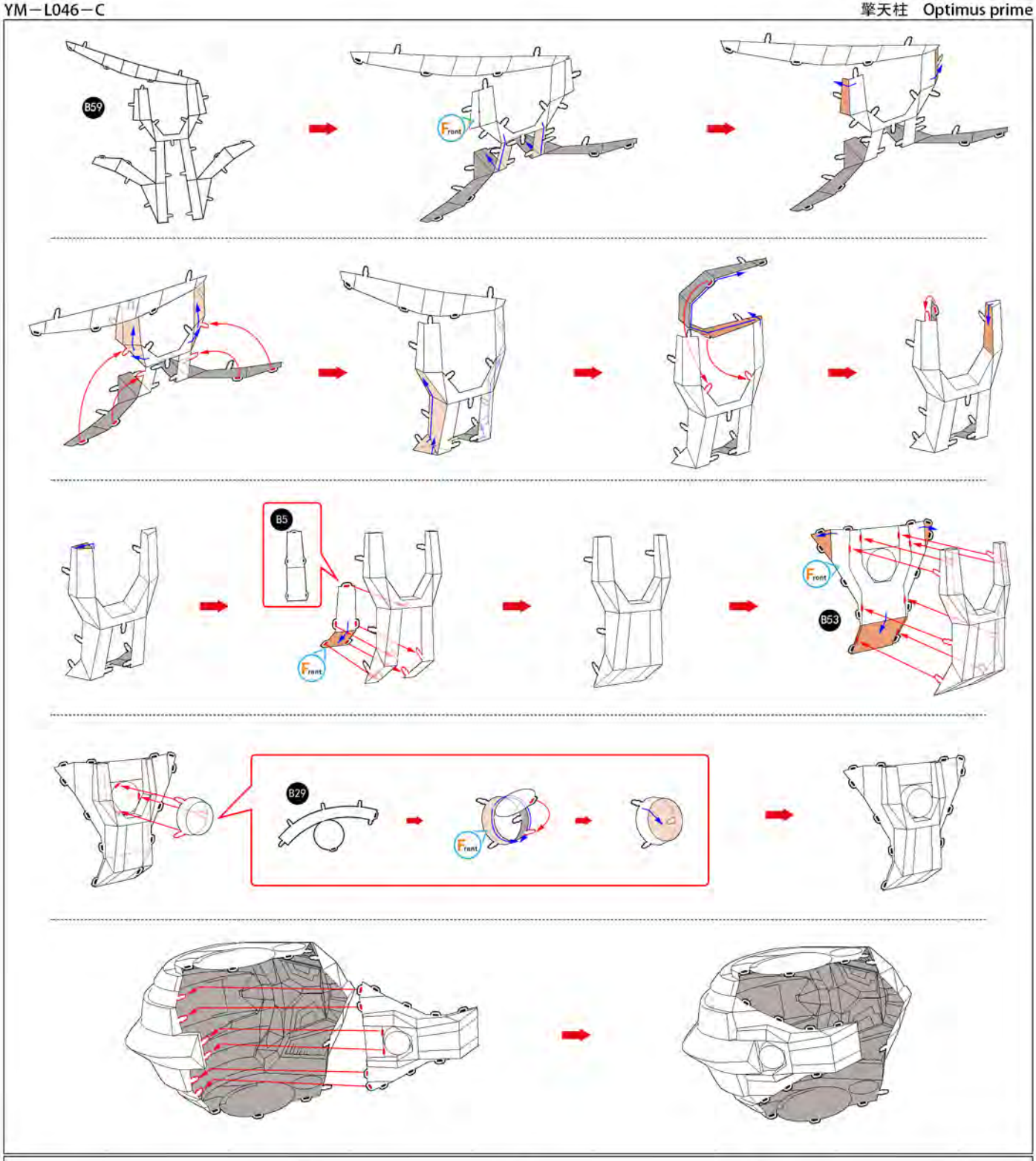
B59
Front
B5
Front
Front
B53
B29
Front

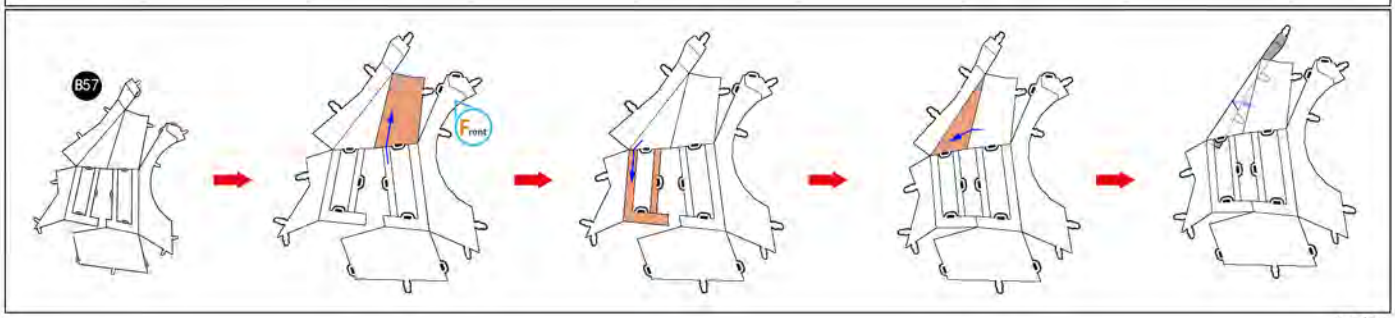
B57
Front

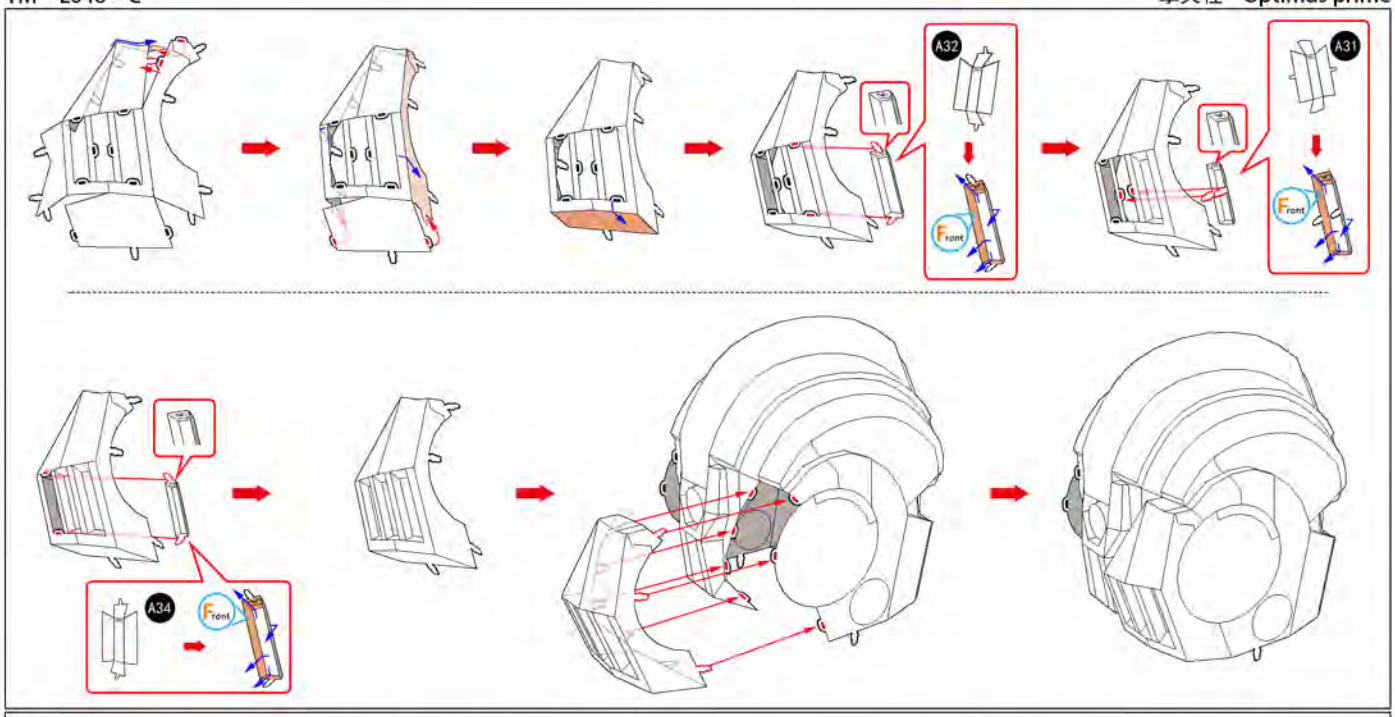
A32
Front
A31
Front
A34
Front

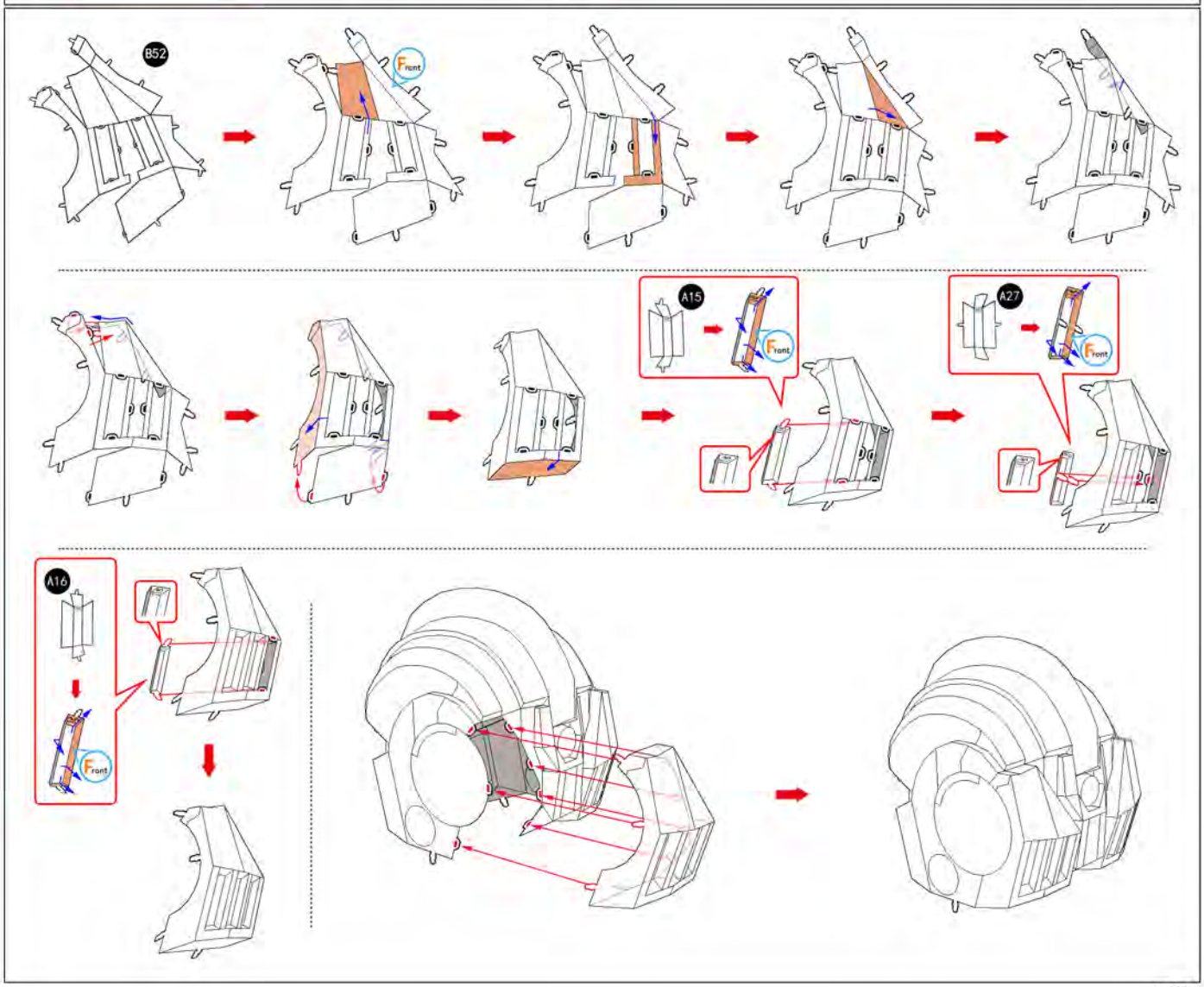
B52
Front
A15
Front
A27
Front
A16
Front

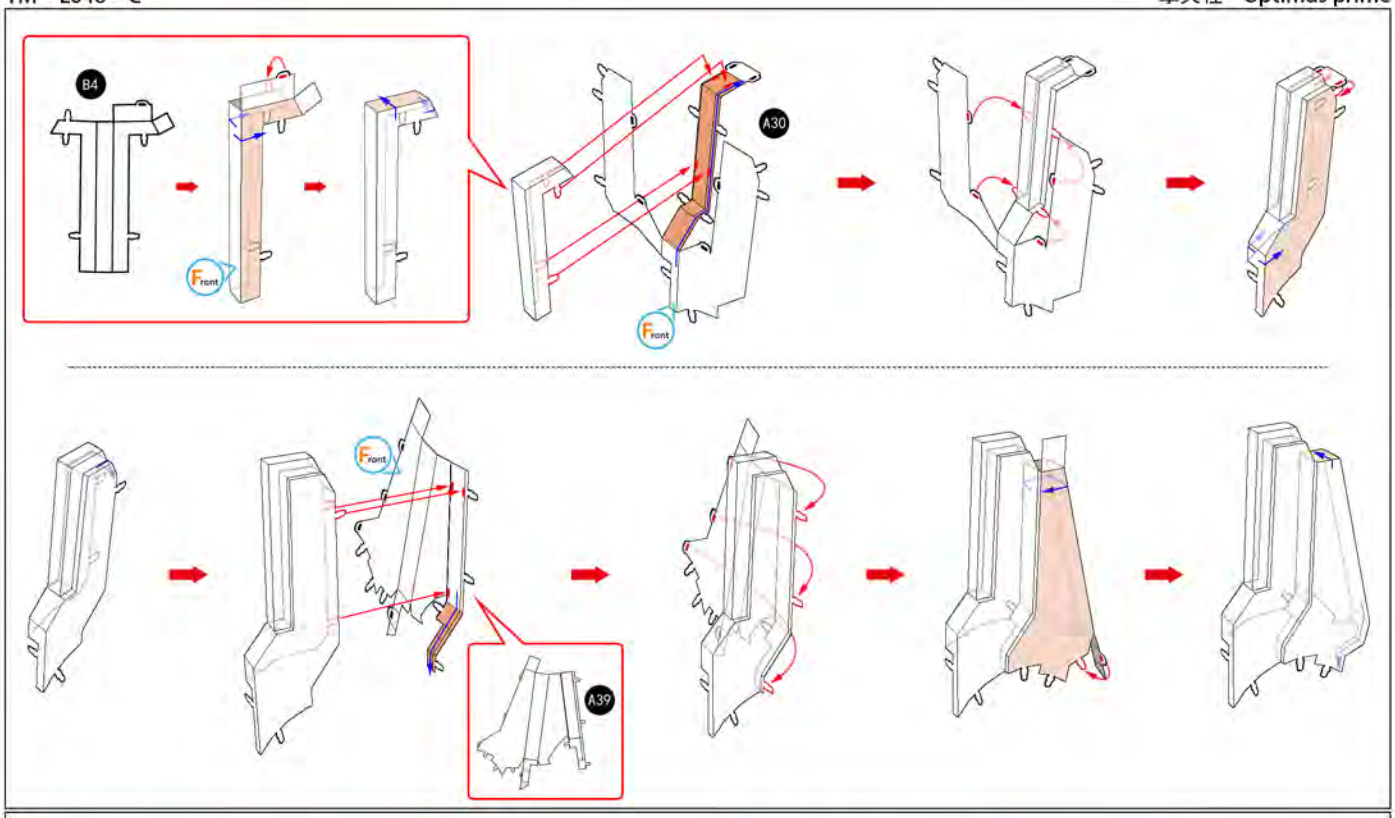
B4
Front
A30
Front
Front
A39

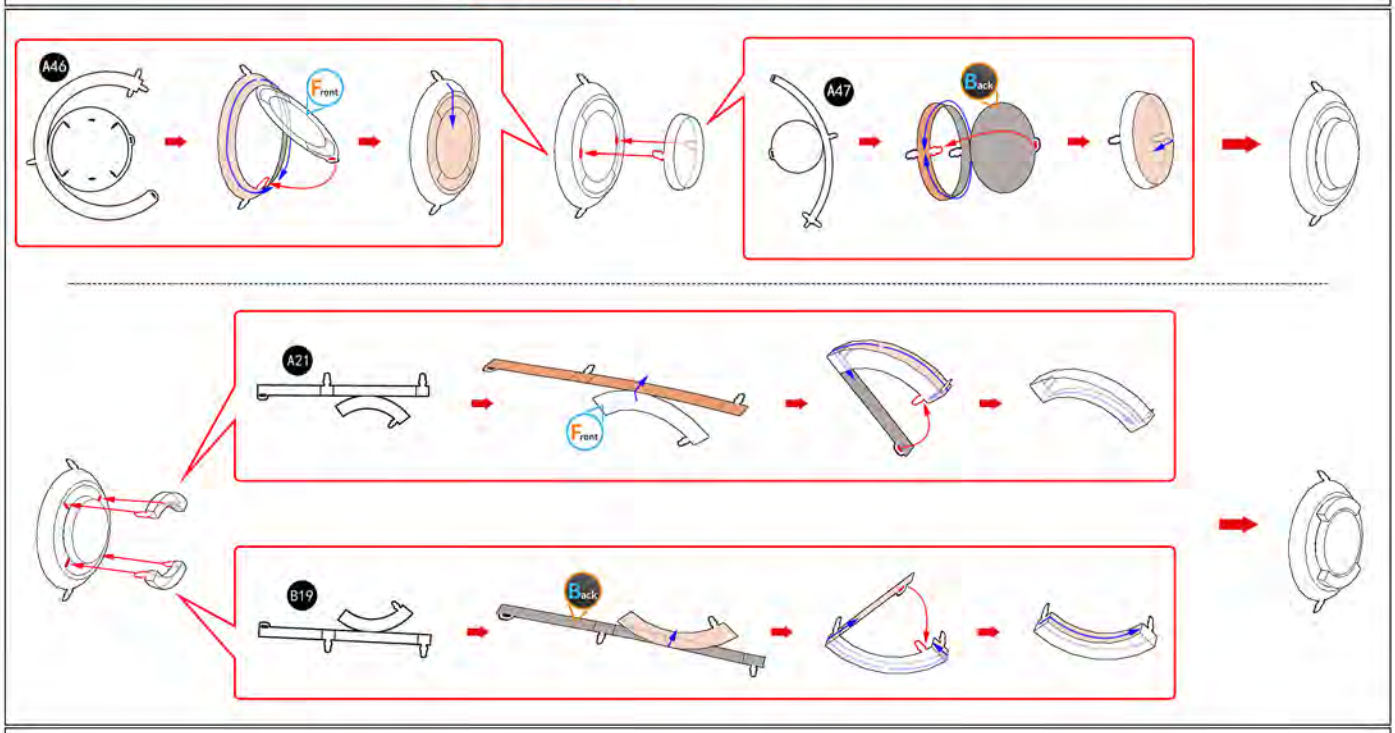
A46
Front
A47
Back
A21
Front
B19
Back

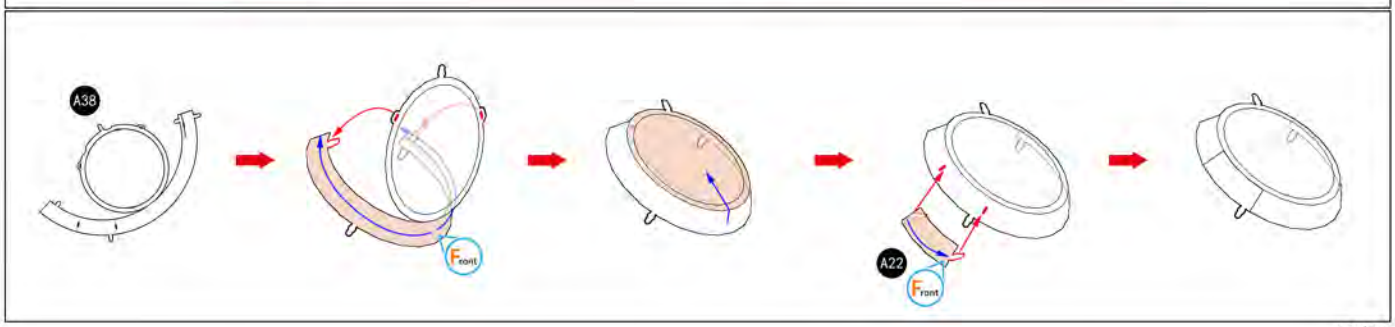
A38
Front
A22
Front

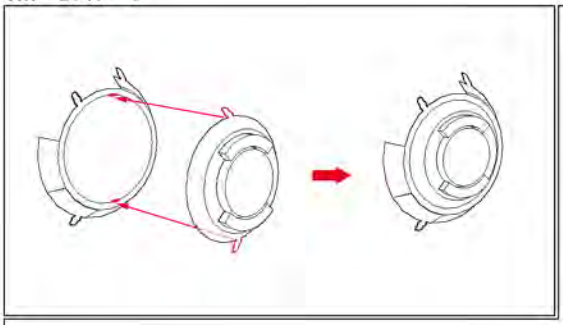

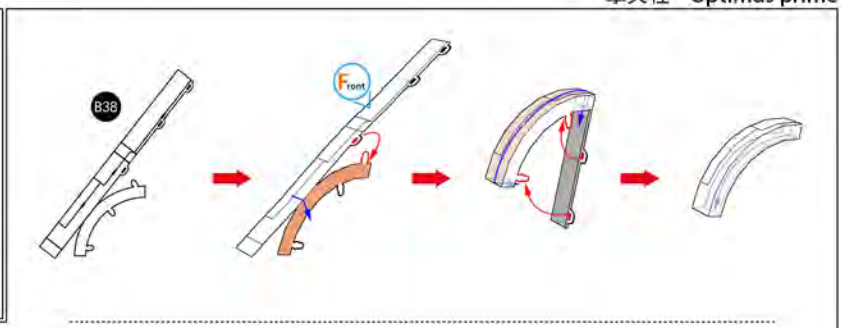
B38
Front

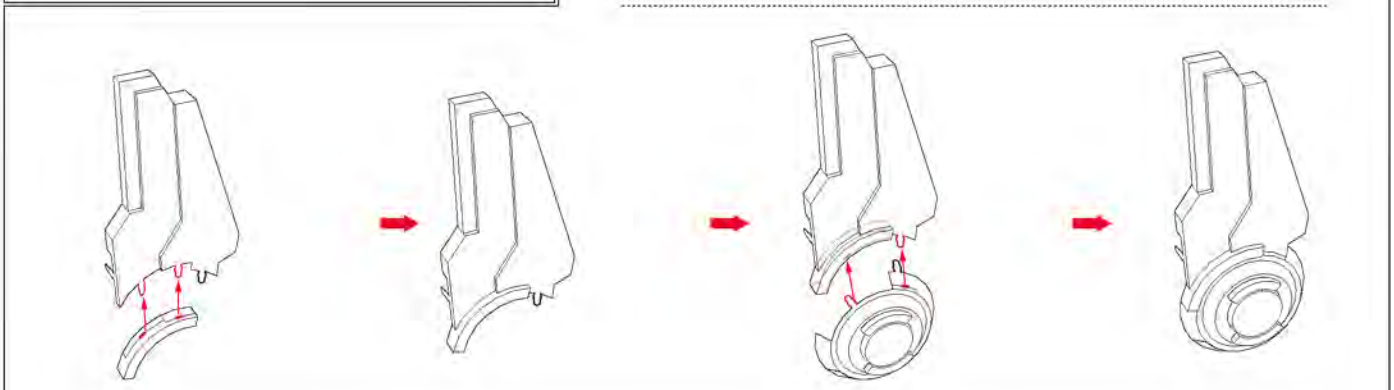

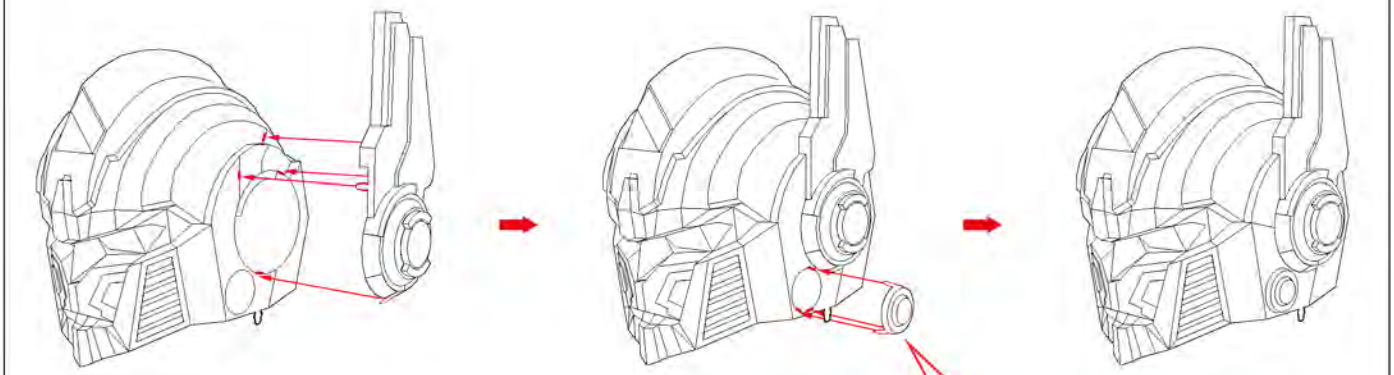

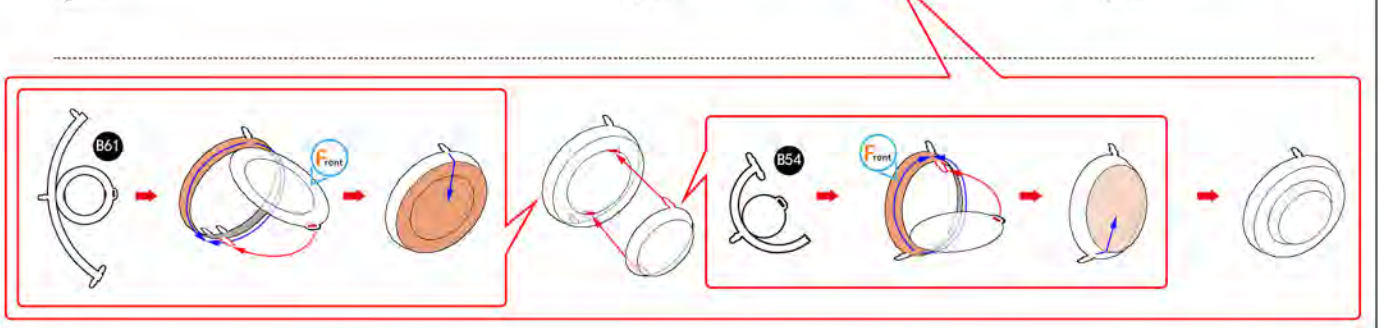
B61
Front
B54
Front

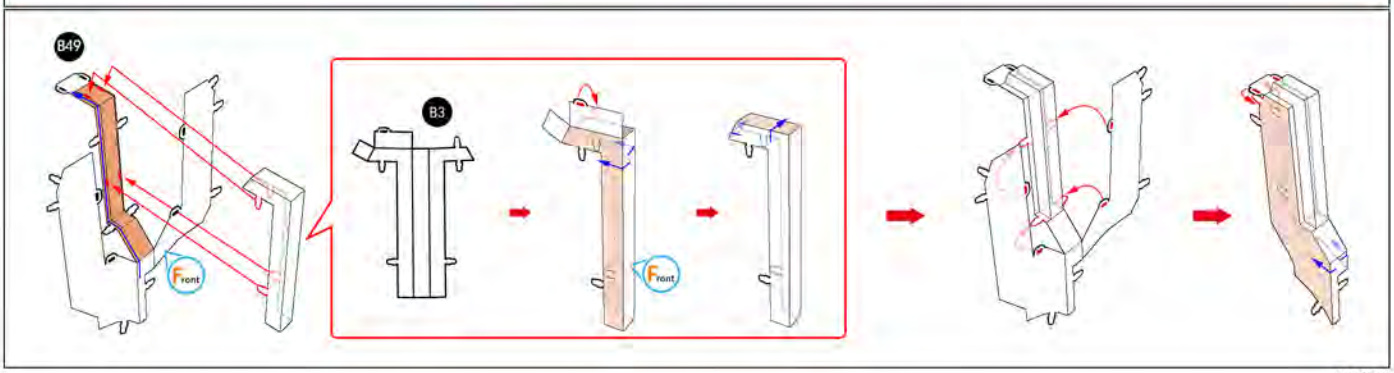
B49
Front
B3
Front

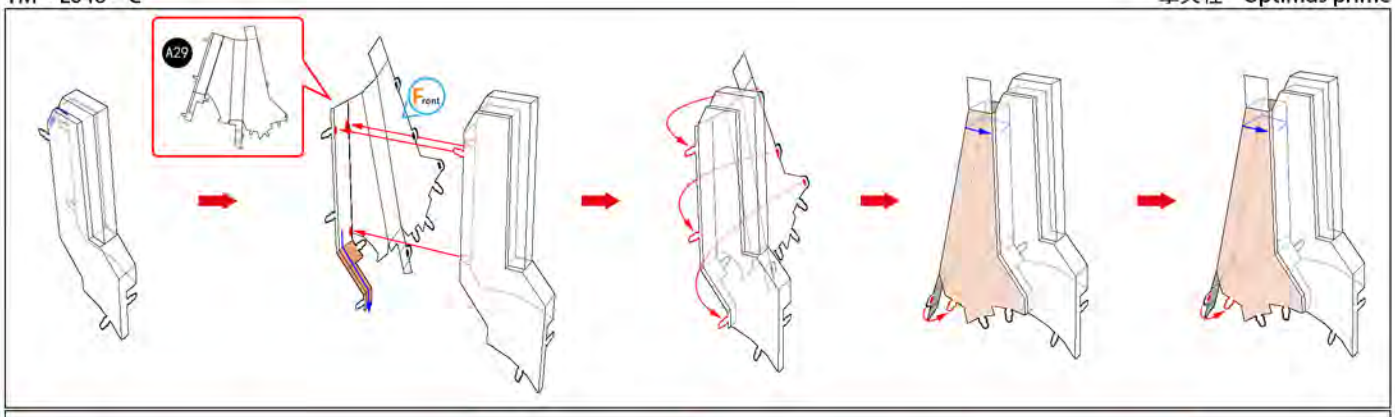
A29
Front

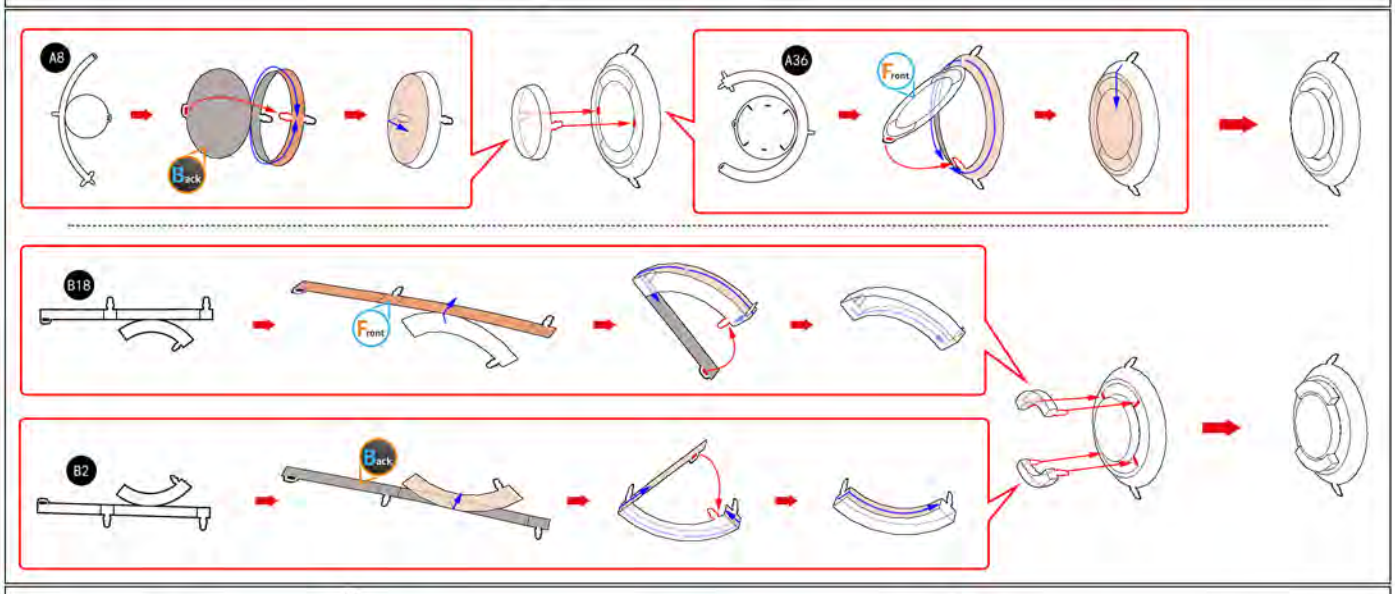
A8
Back
A36
Front
B18
Front
B2
Back

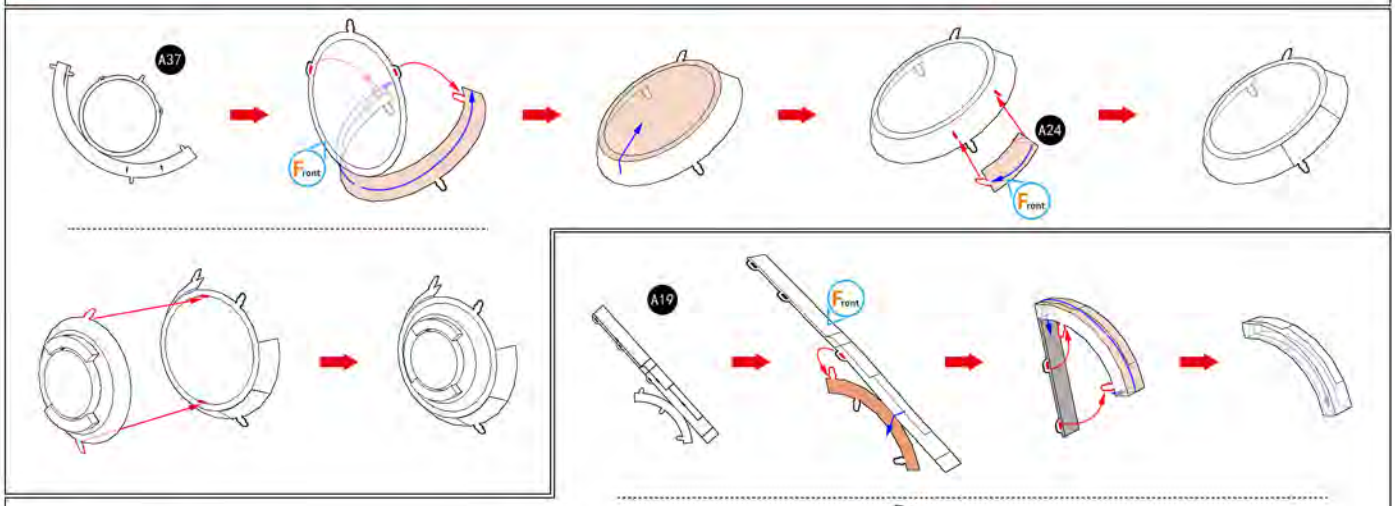
A37
Front
A24
Front

A19
Front

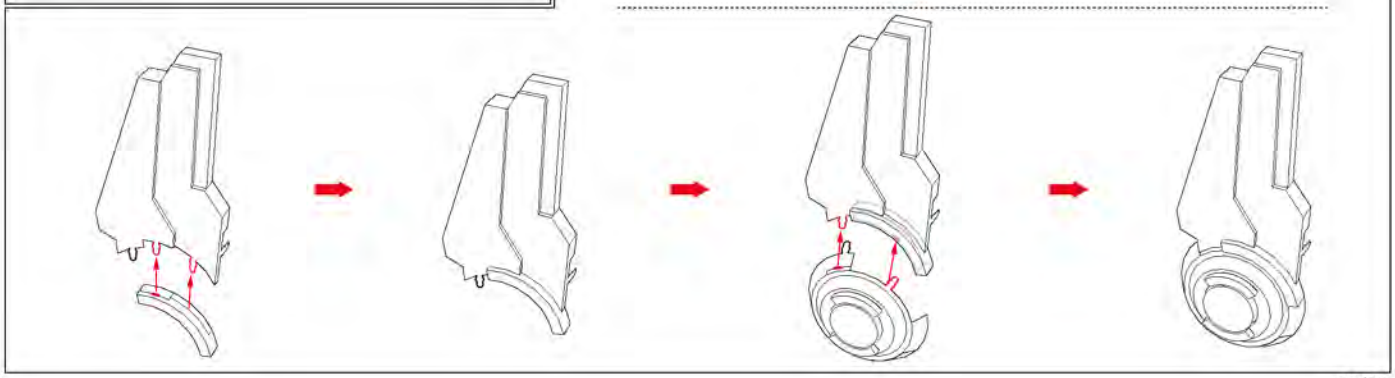

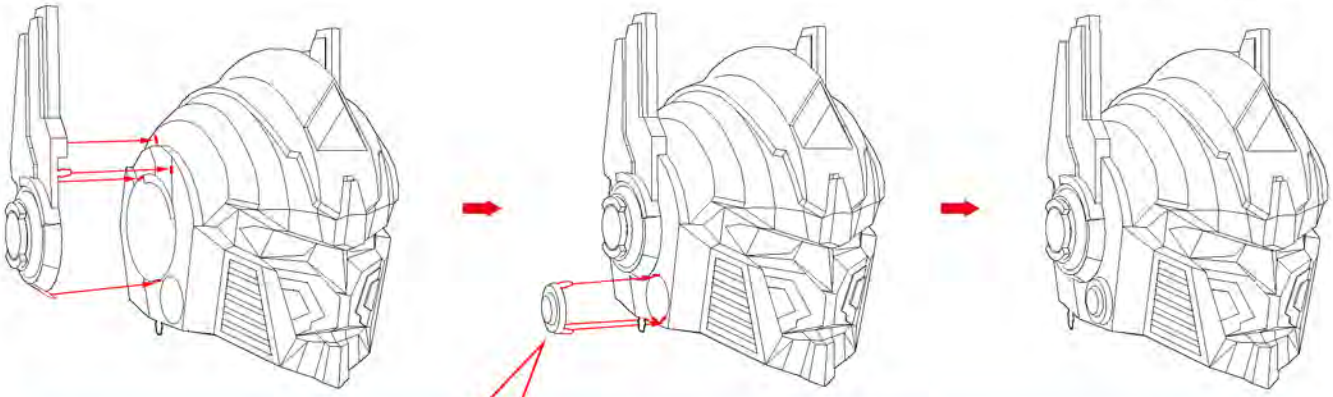

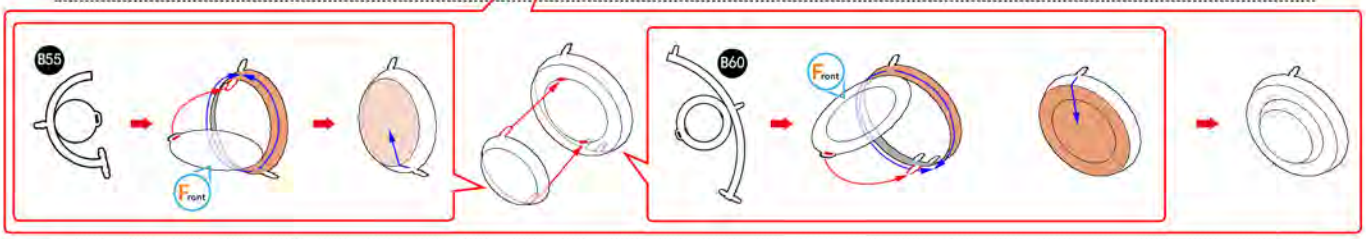
B55
Front
B60
Front

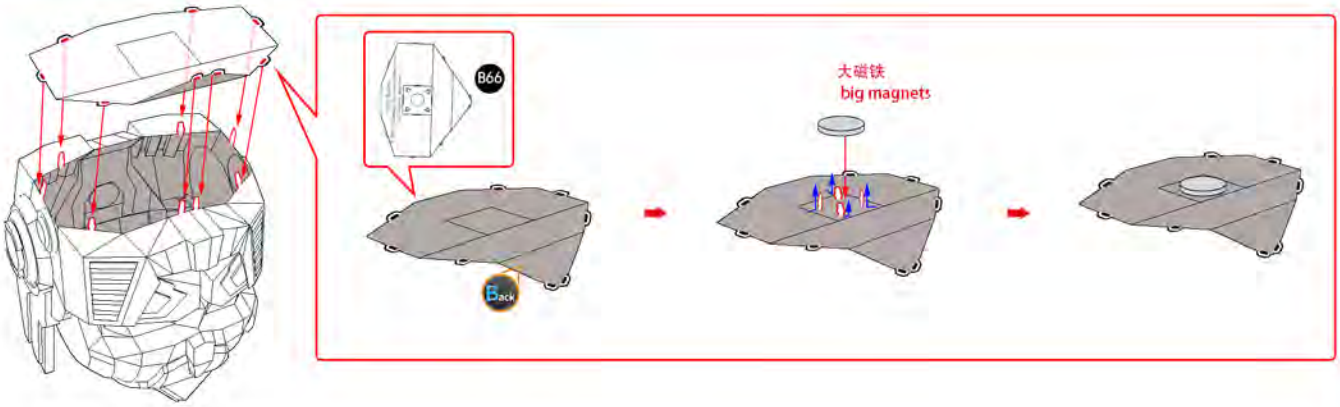
B66
大磁铁
big magnets
Back

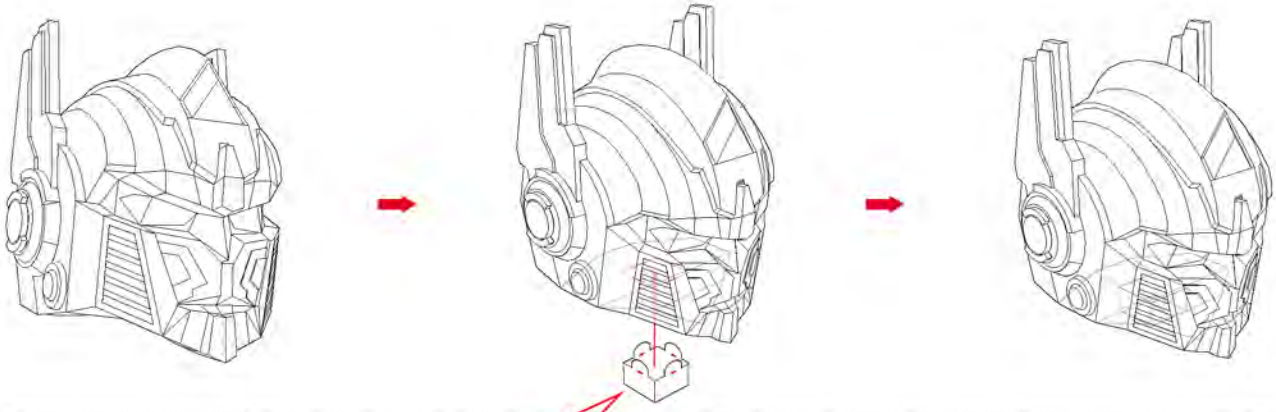

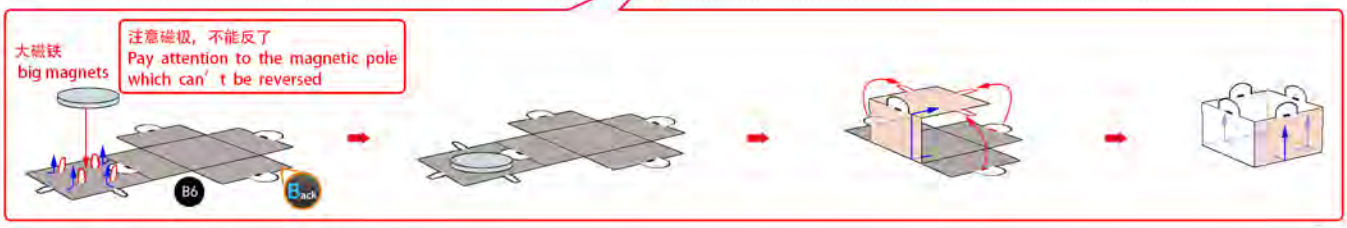
大磁铁
big magnets
注意磁极，不能反了
Pay attention to the magnetic pole which can' t be reversed
B6
Back

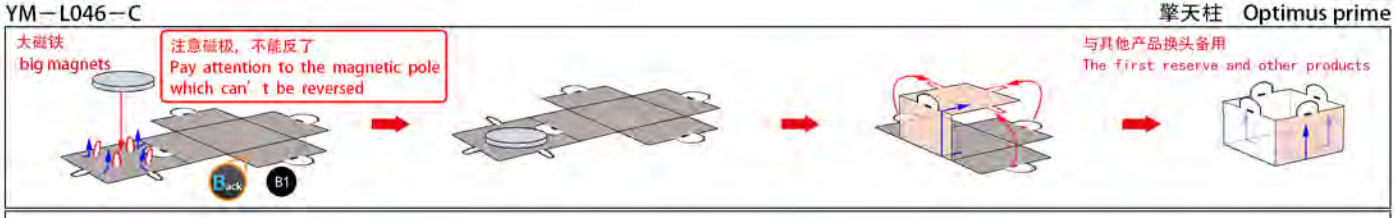

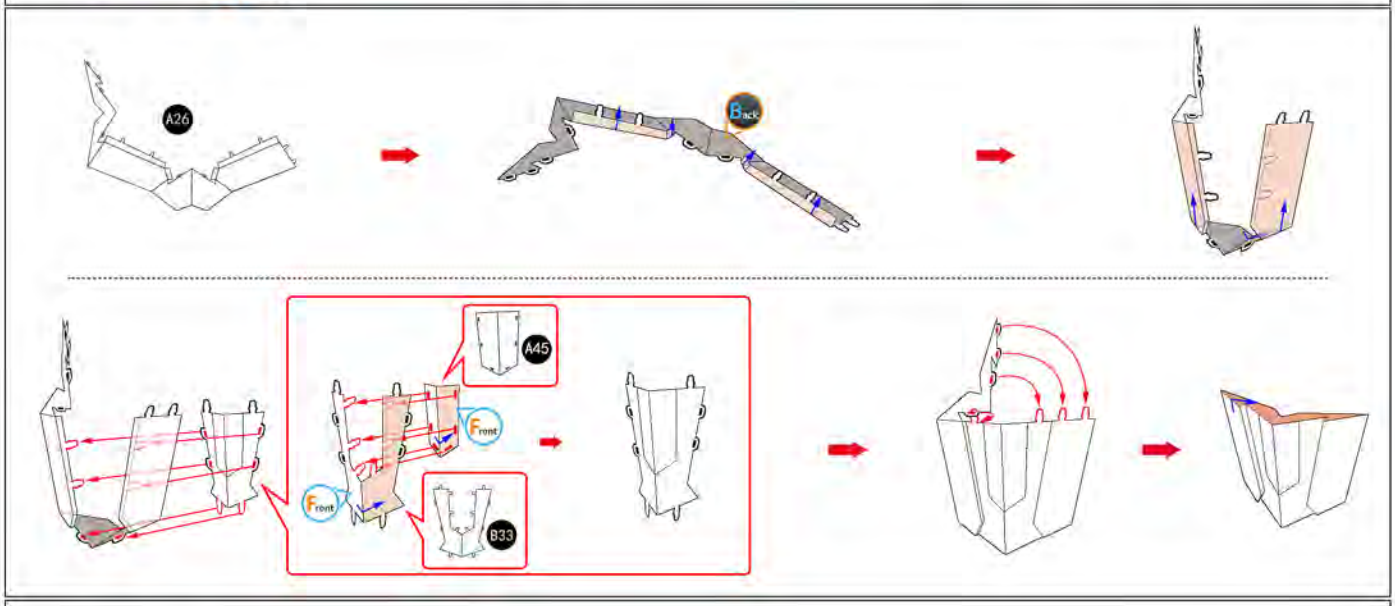

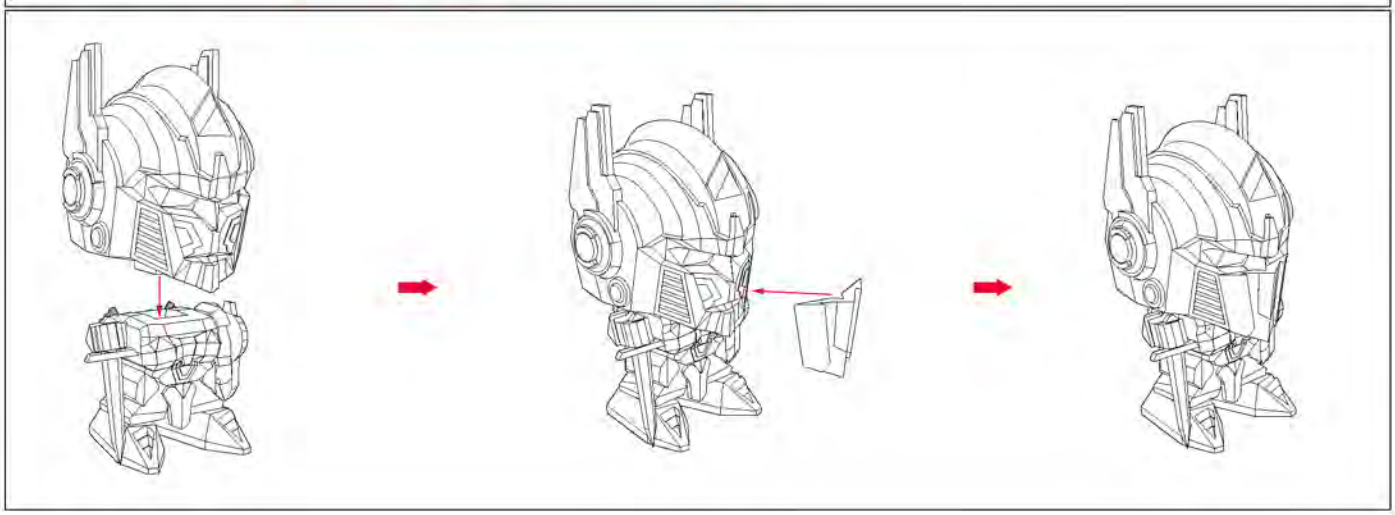

上海艺模电子科技有限公司
SHANGHAI ART MODEL ELECTRONIC SCIENCE AND TECHNOLOGY CO.,LTD

电话/Tel: 021-58942999
网址/Website: WWW.MAPLEMU.COM
产地/Address: 上海浦东新区川周公路5917弄1号

Design by: Kanade
猛太帅
丫丫

扫码加入微信公众号
解锁更多模型
Scan the two-dimensional code
Join us and unlock more models

Licensed By:

HASBRO and its logo and TRANSFORMERS,the logo and all related characters are trademarks of Hasbro and used with permission.
© 2017 Hasbro.All Rights Reserved.