# TRANSFORMERS BUMBLEBEE

## 大黄蜂

## BUMBLEBEE

## YM-L066-C

# 组装基本步骤示意图 ASSEMBLE THE BASIC STEP DIAGRAM

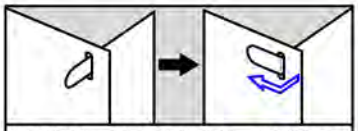

固定方法1：卡扣插入对应卡槽，固定并折弯。

Fixing method 2: the buckle is inserted into the corresponding clamping groove, fixed and bent.

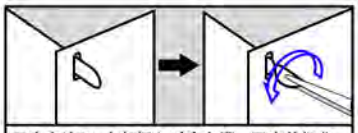

固定方法2：卡扣插入对应卡槽，固定并扭曲。

Fixing method 2: the buckle is inserted into the corresponding clamping groove, fixed and twisted.

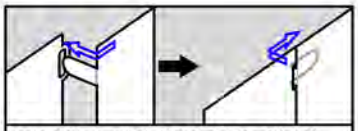

固定方法3：调整扣针角度后插入对应卡槽，固定并折弯。

Fixing method 3: after adjusting the angle of the buckle needle, insert it into the corresponding clamping groove, fix it and bend it.

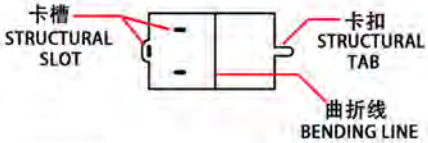

大磁铁 Large magnet ×2

小磁铁 Small magnet ×3

垂直卡扣
Buckle upright

三角定位标记
Triangular positioning mark

优先安装
Priority installation

纹理面
Texture surface

折弯面
Bending surface

非纹理面
Non - textured surface

组装前请戴上指套！
Please wear a finger cover before assembly!

板件上刻有编号
Sheet metal pieces of the engraved with serial number

安装前可适当调整卡扣角度！
Adjust the Angle of buckle properly before installation!

部分零件有备用件！
Some parts have spare parts!

## 金属零件编号 METAL PART NUMBER

A

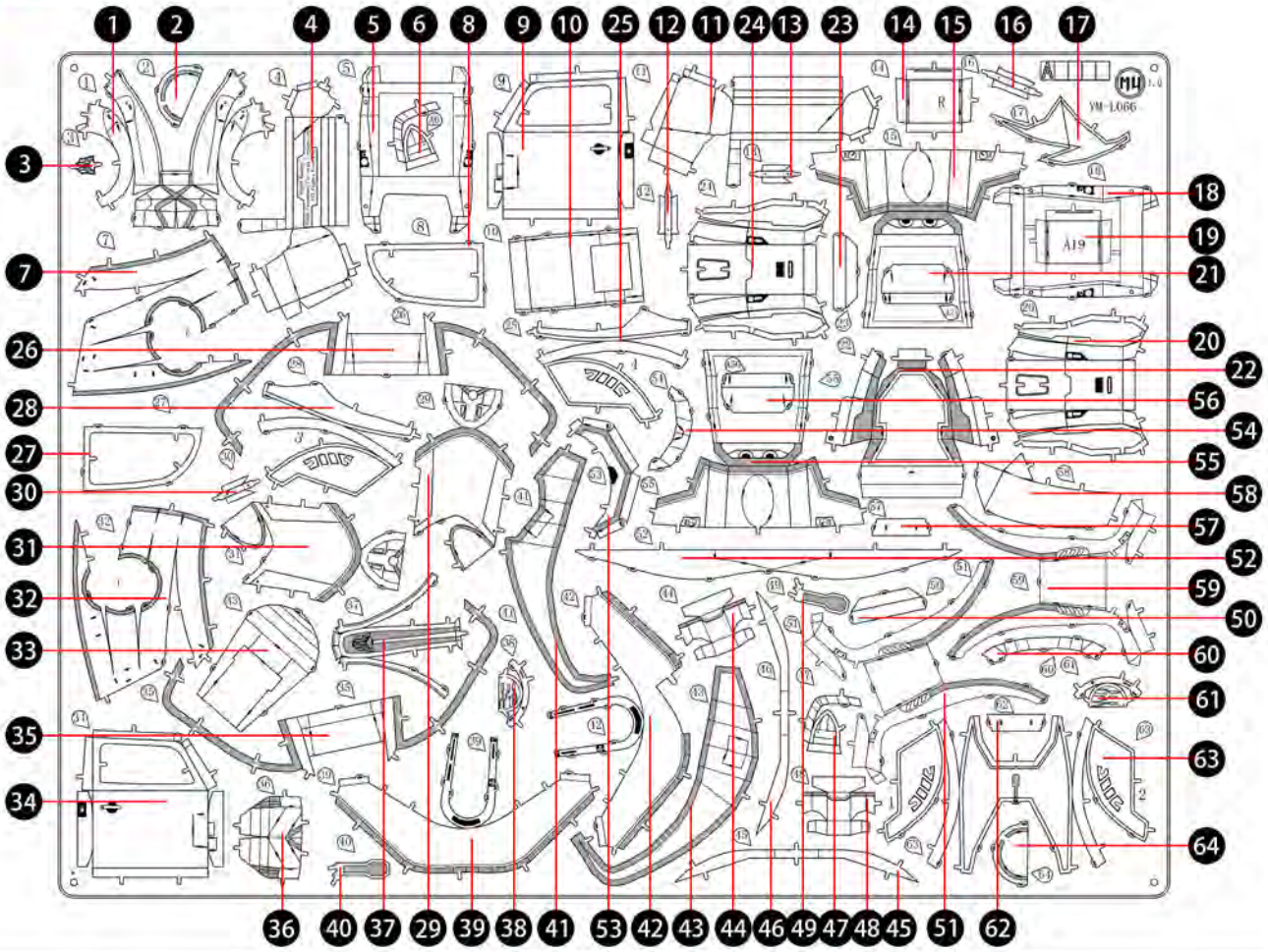

# 金属零件编号 METAL PART NUMBER

## B

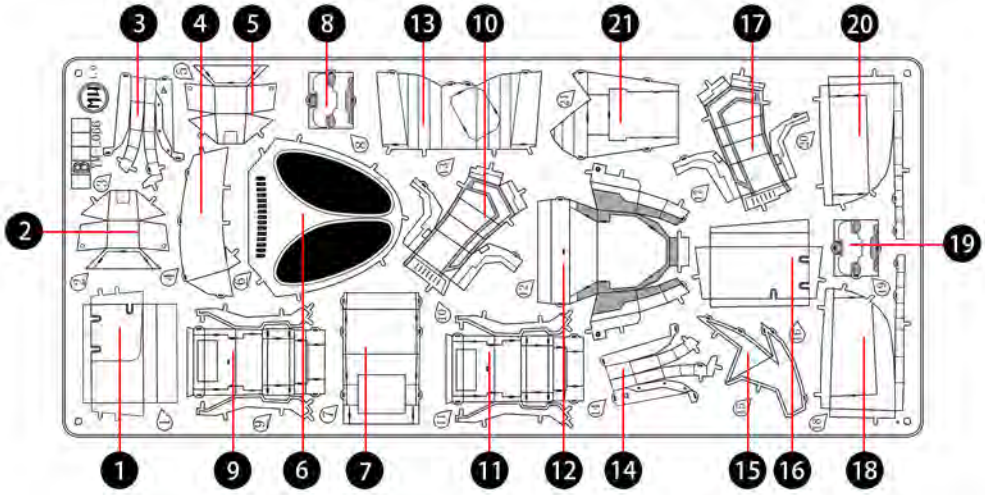


## C

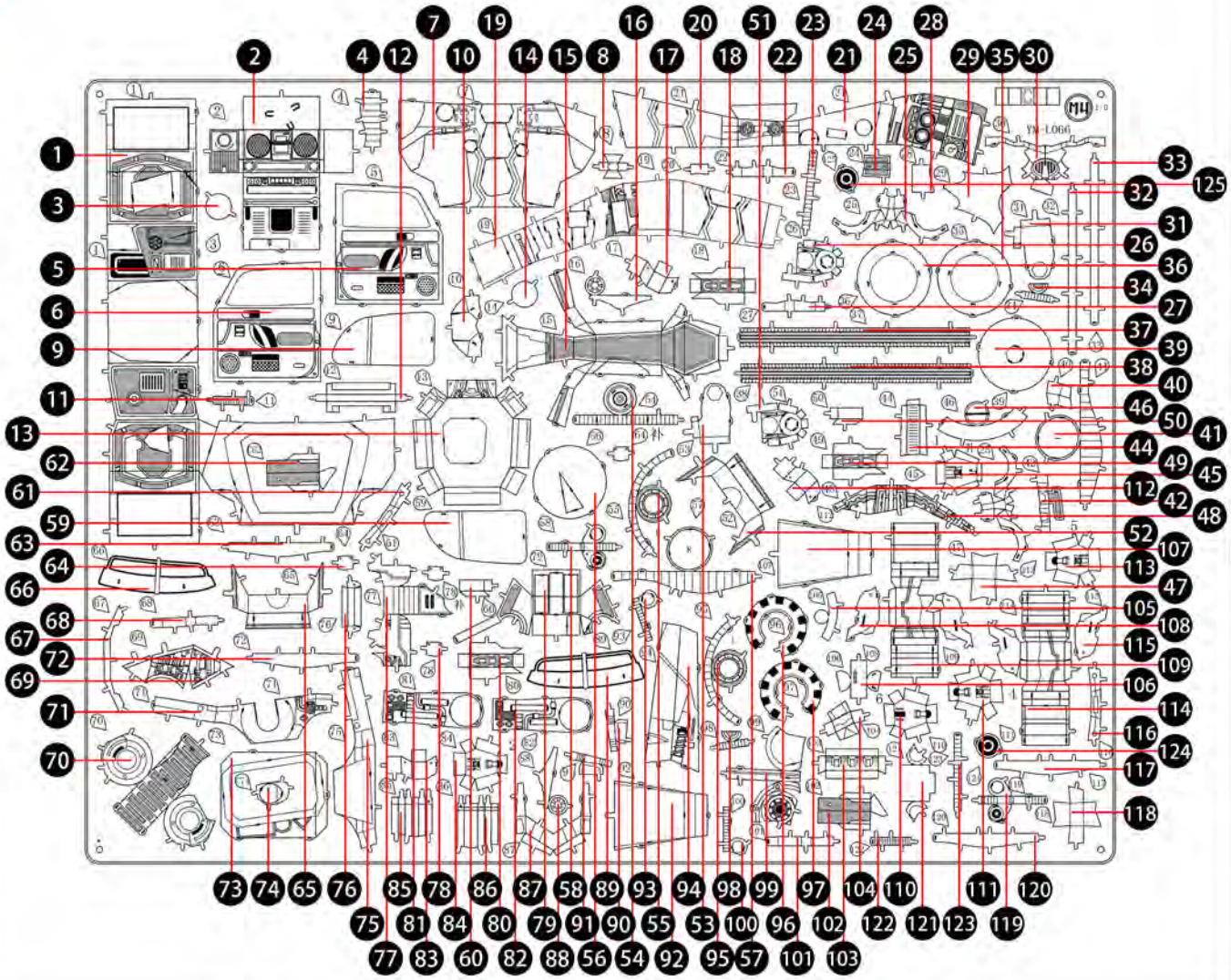

# 金属零件编号 METAL PART NUMBER

## D

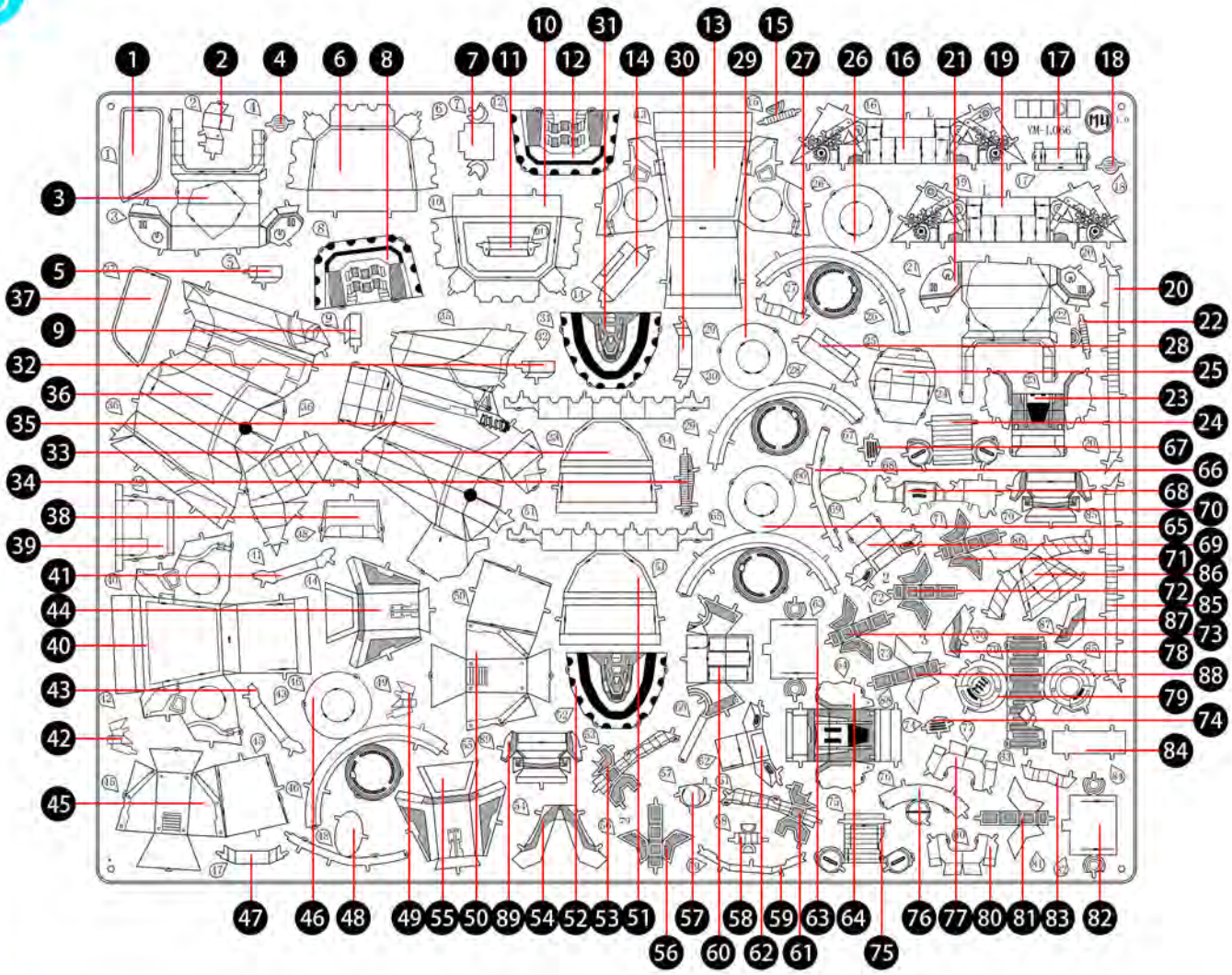


## E

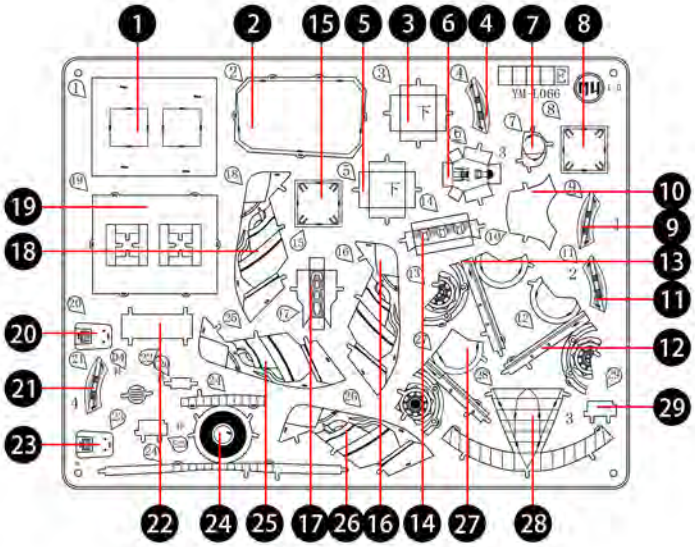

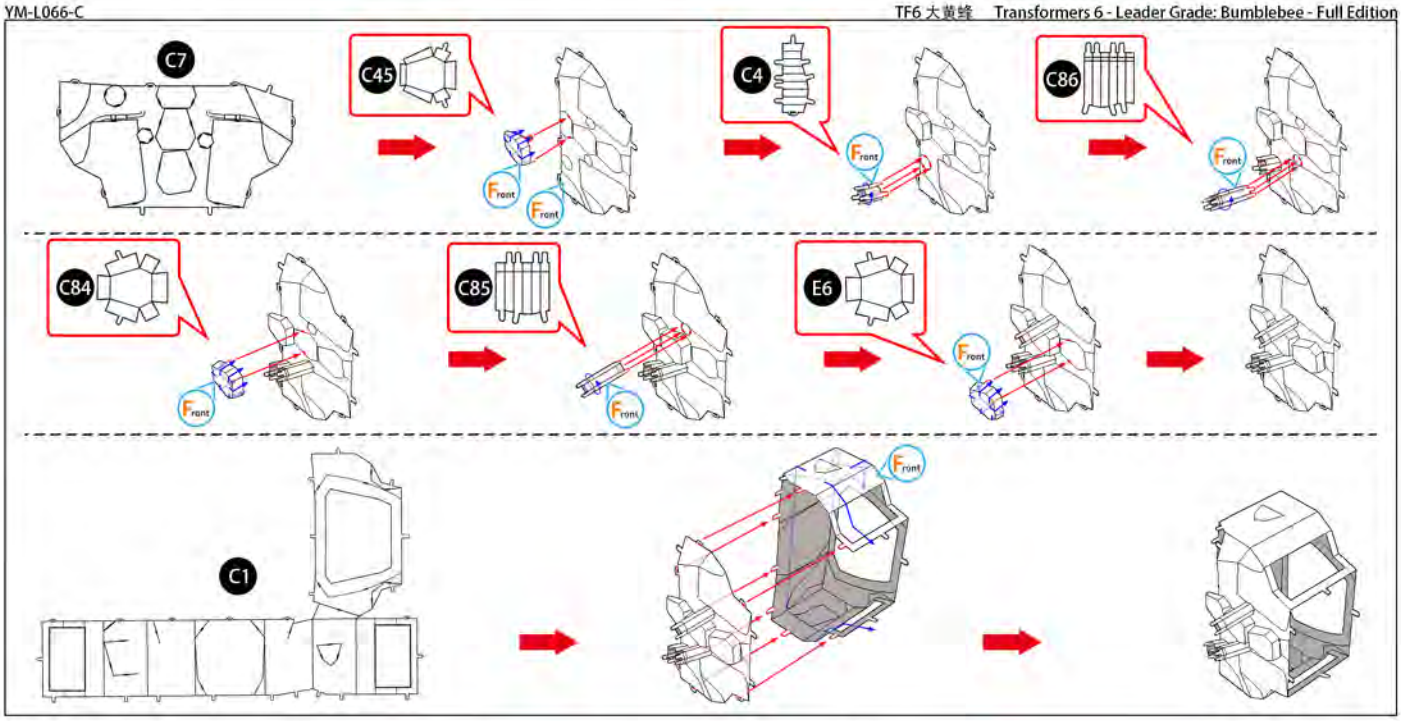
C7
C45
Front
Front
C4
Front
C86
Front
C84
Front
C85
Front
E6
Front
C1
Front

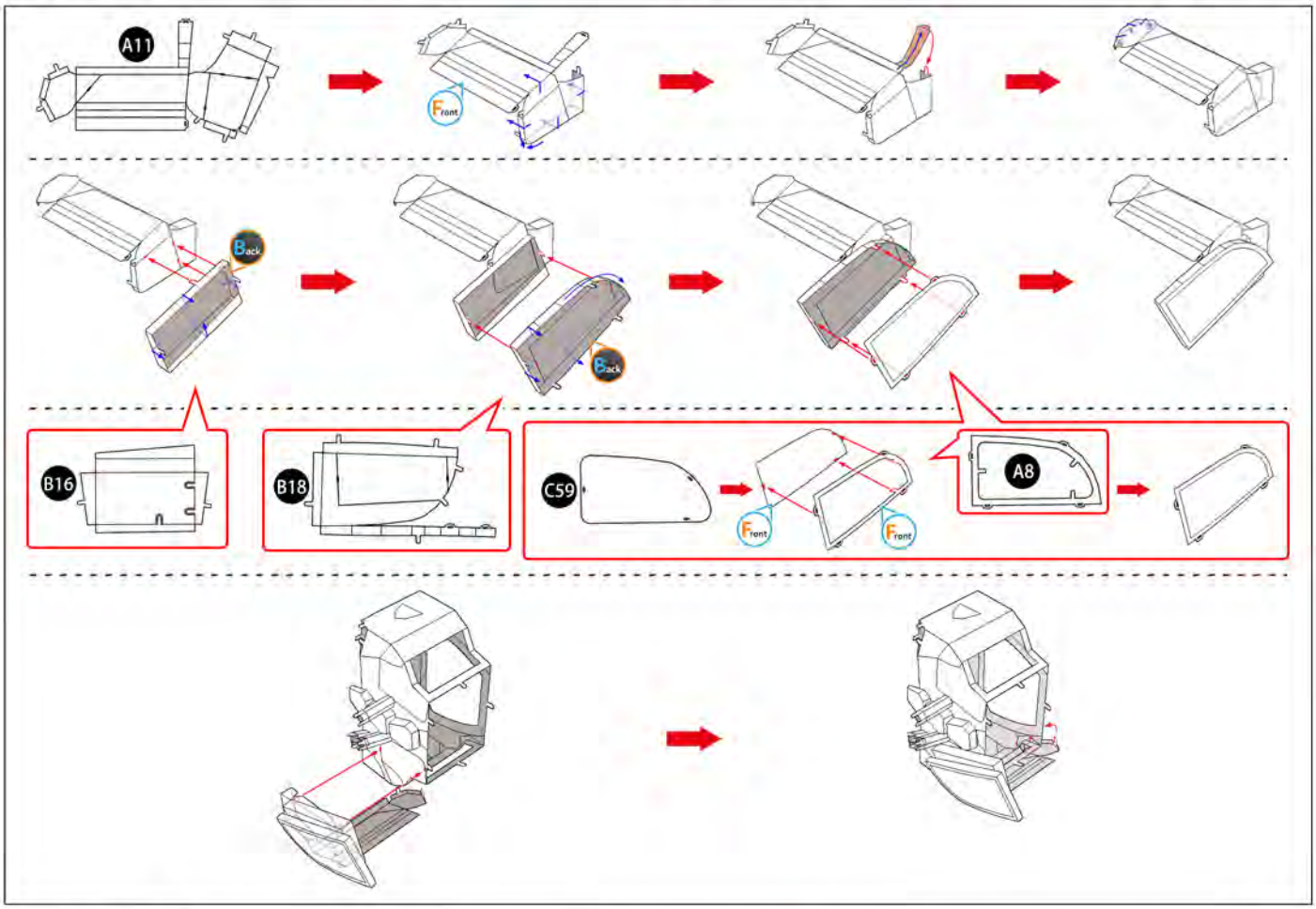
A11
Front
Back
Back
B16
B18
C59
Front
Front
A8

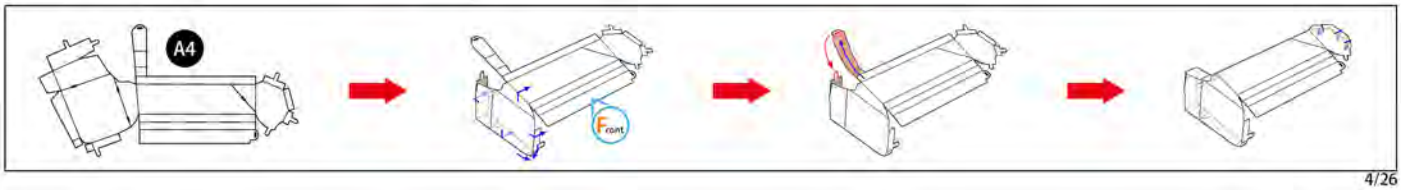
A4
Front

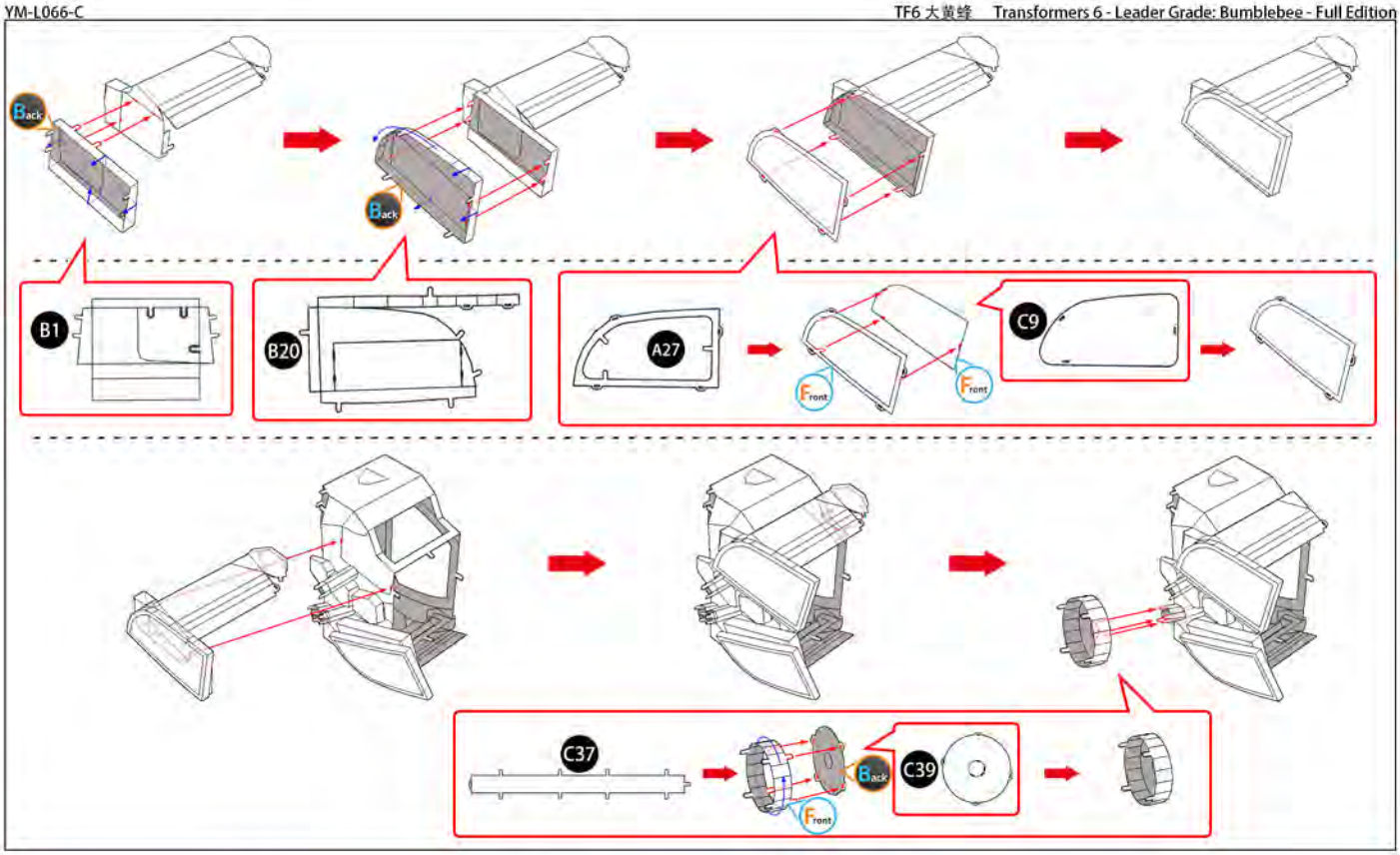
Back
Back
B1
B20
A27
Front
Front
C9
C37
Back
C39
Front

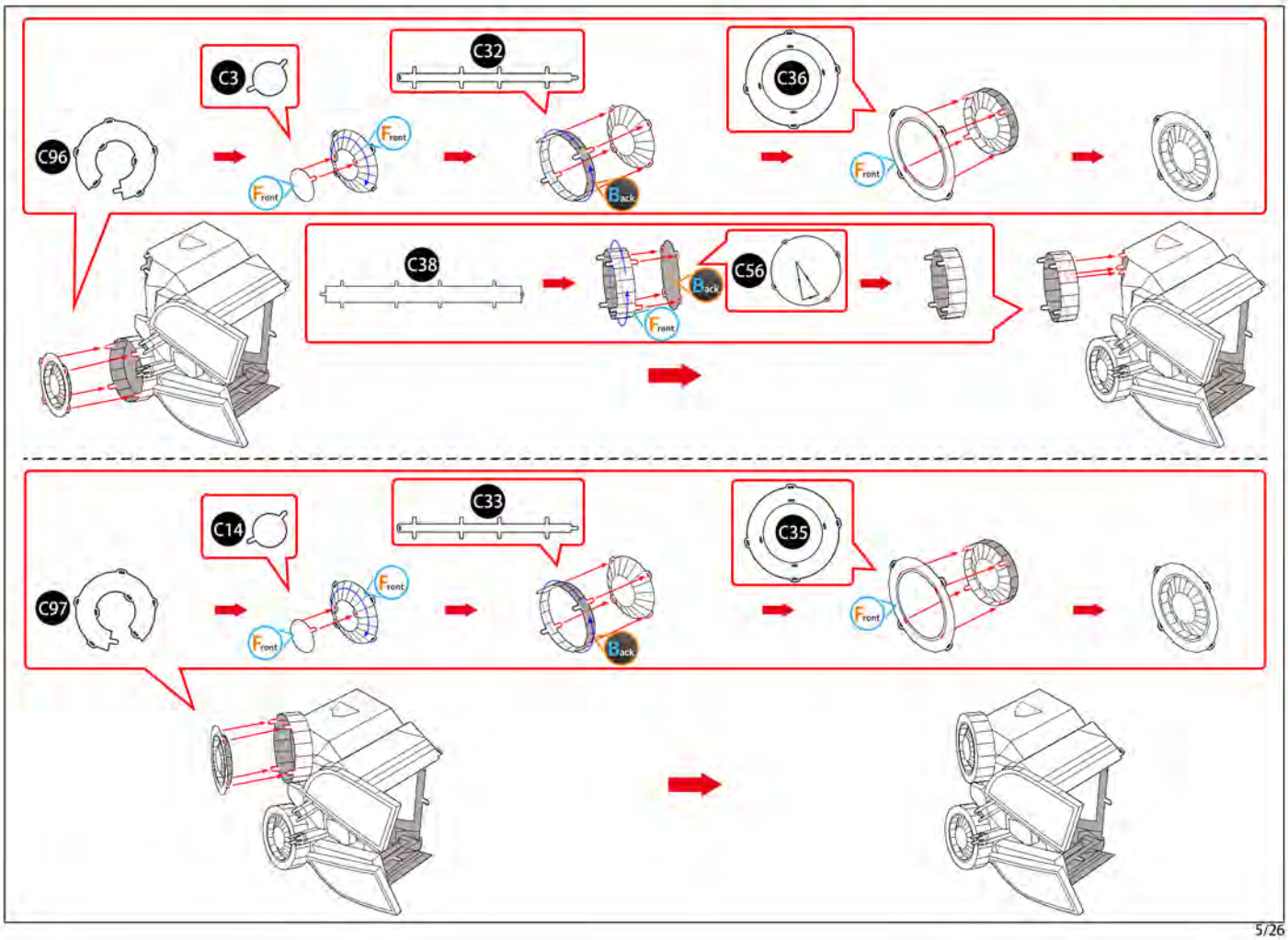
C3
C32
C36
C96
Front
Front
Back
Front
C38
Back
C56
Front
C14
C33
C35
C97
Front
Front
Back
Front

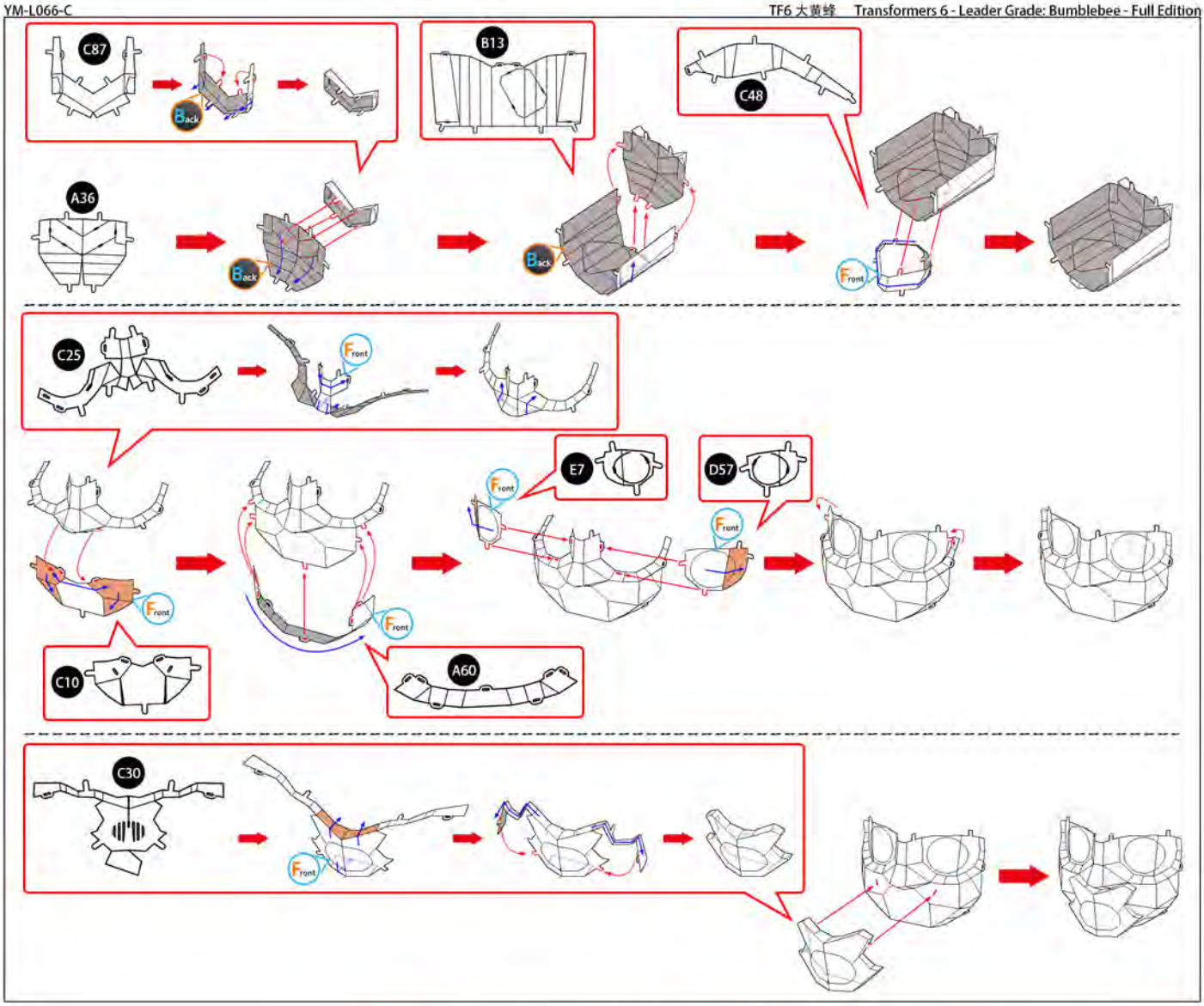
C87
Back
B13
C48
A36
Back
Back
Front
C25
Front
Front
E7
D57
Front
Front
Front
C10
A60
C30
Front

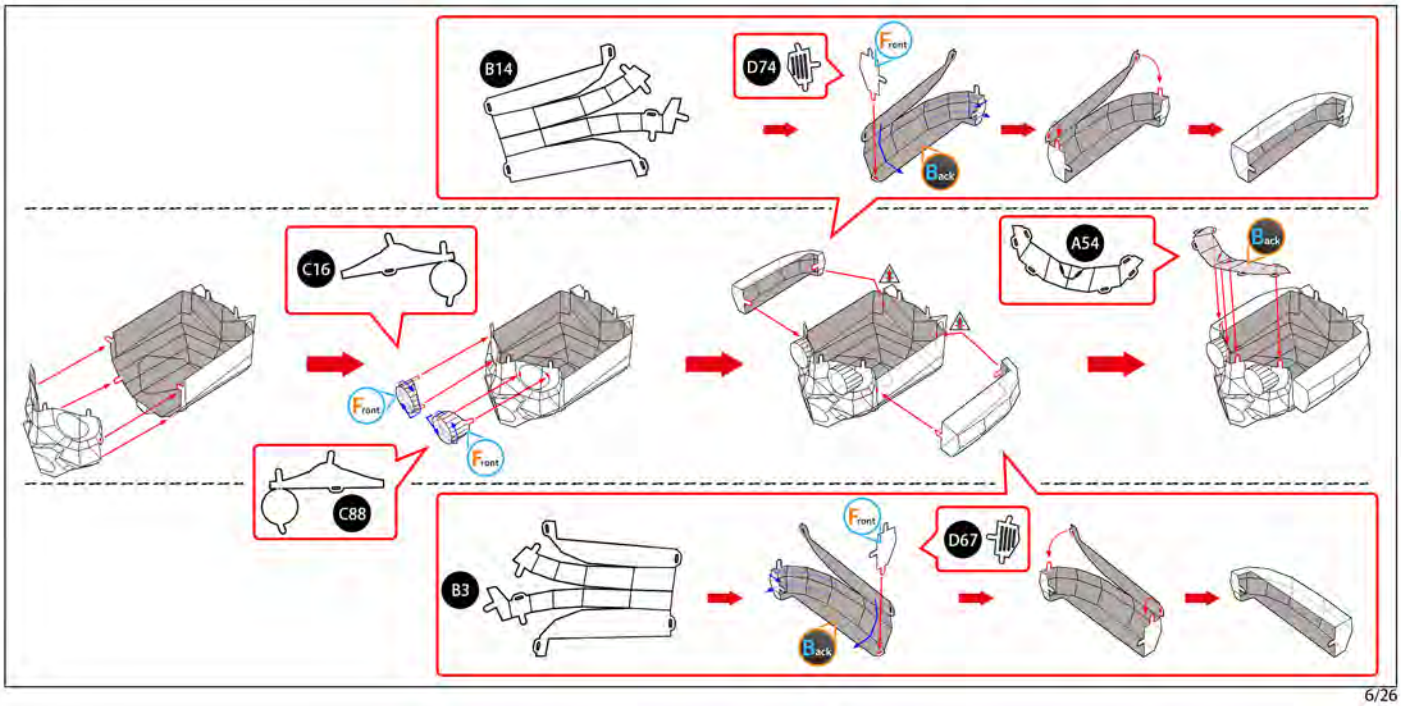
B14
D74
Front
Back
C16
A54
Back
Front
Front
C88
B3
Front
D67
Back

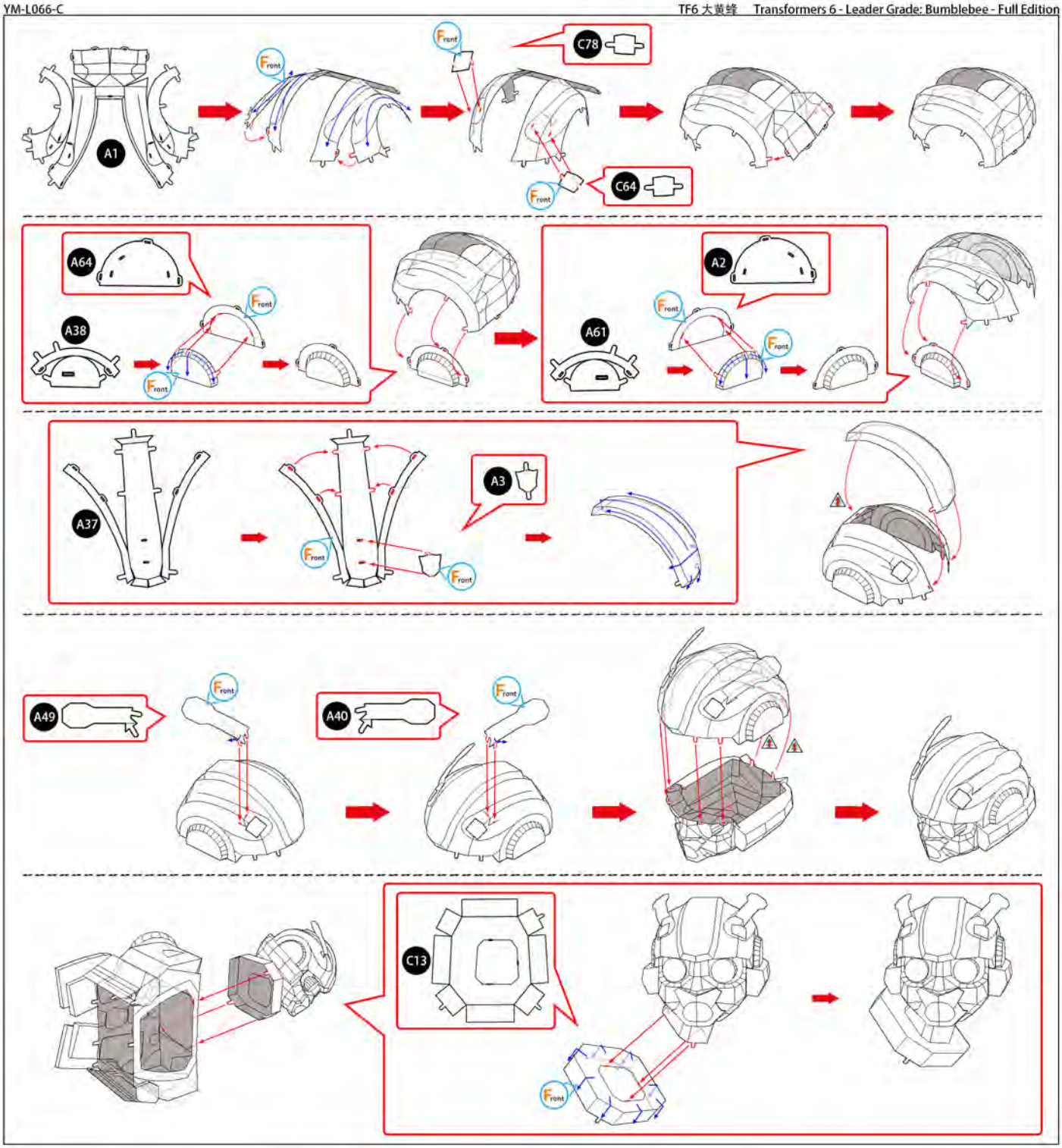
A1
Front
C78
C64
A64
A38
A2
A61
A37
A3
A49
A40
C13
B6
A52
A53
C91
C90

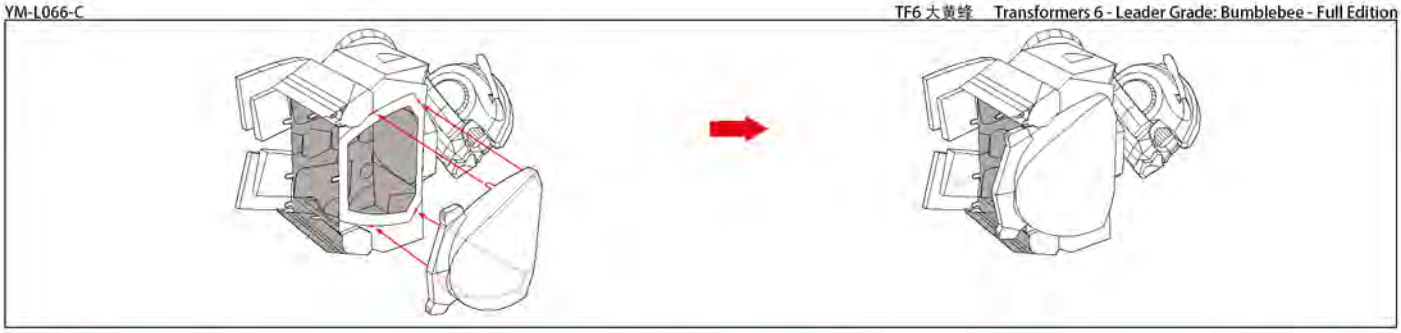

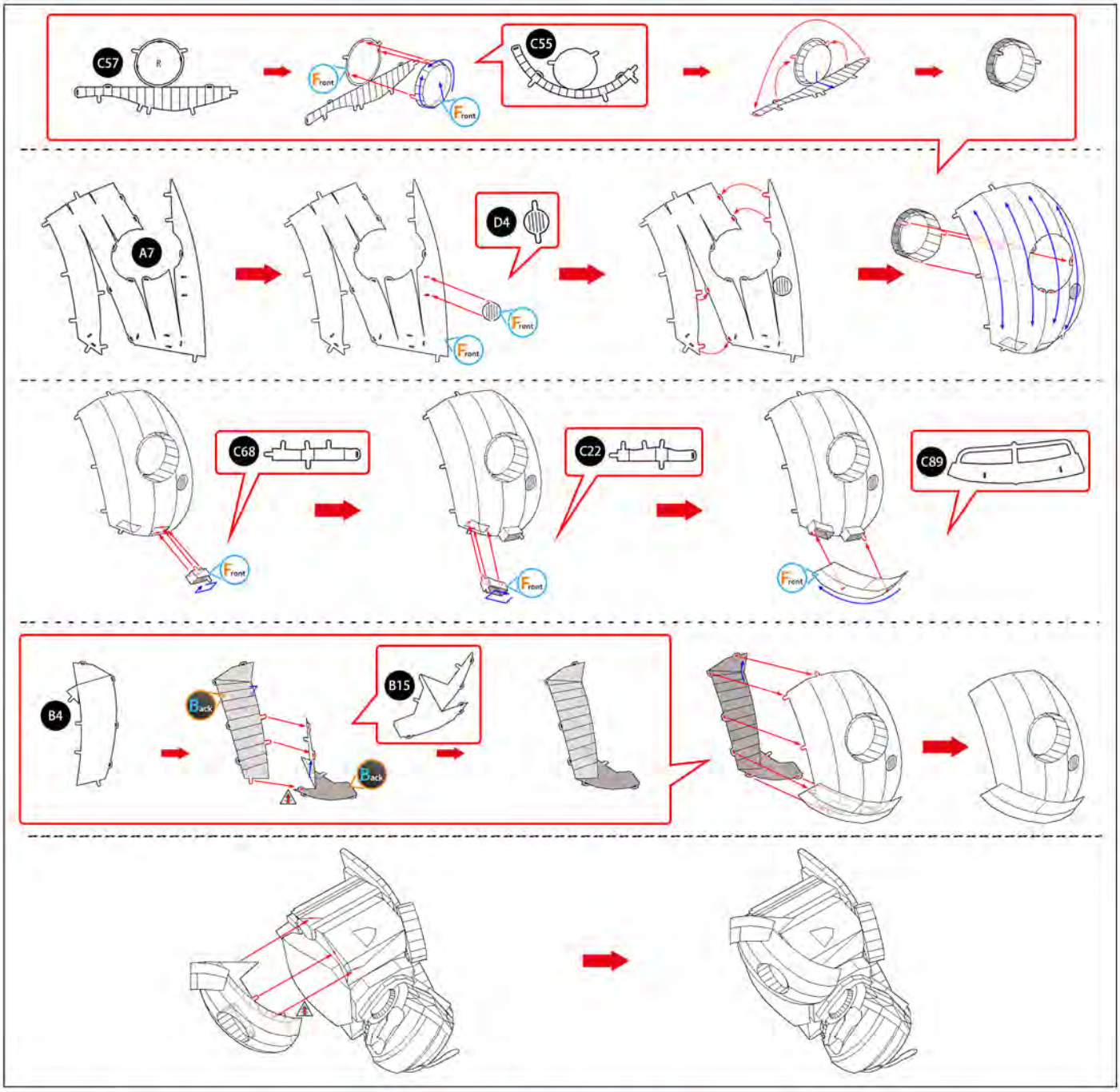
C57
R
Front
Front
C55
A7
D4
Front
Front
C68
Front
C22
Front
C89
Front
B4
Back
B15
Back

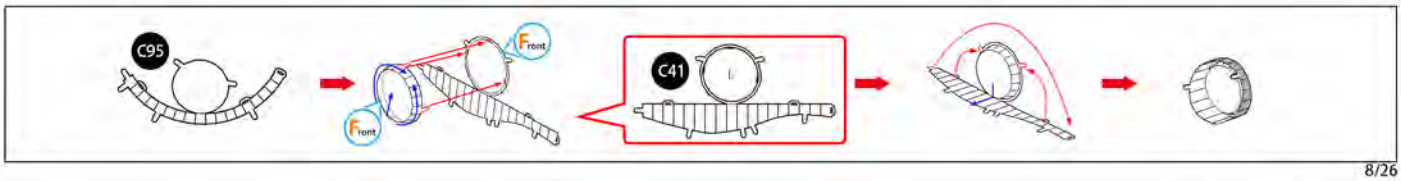
C95
Front
Front
C41

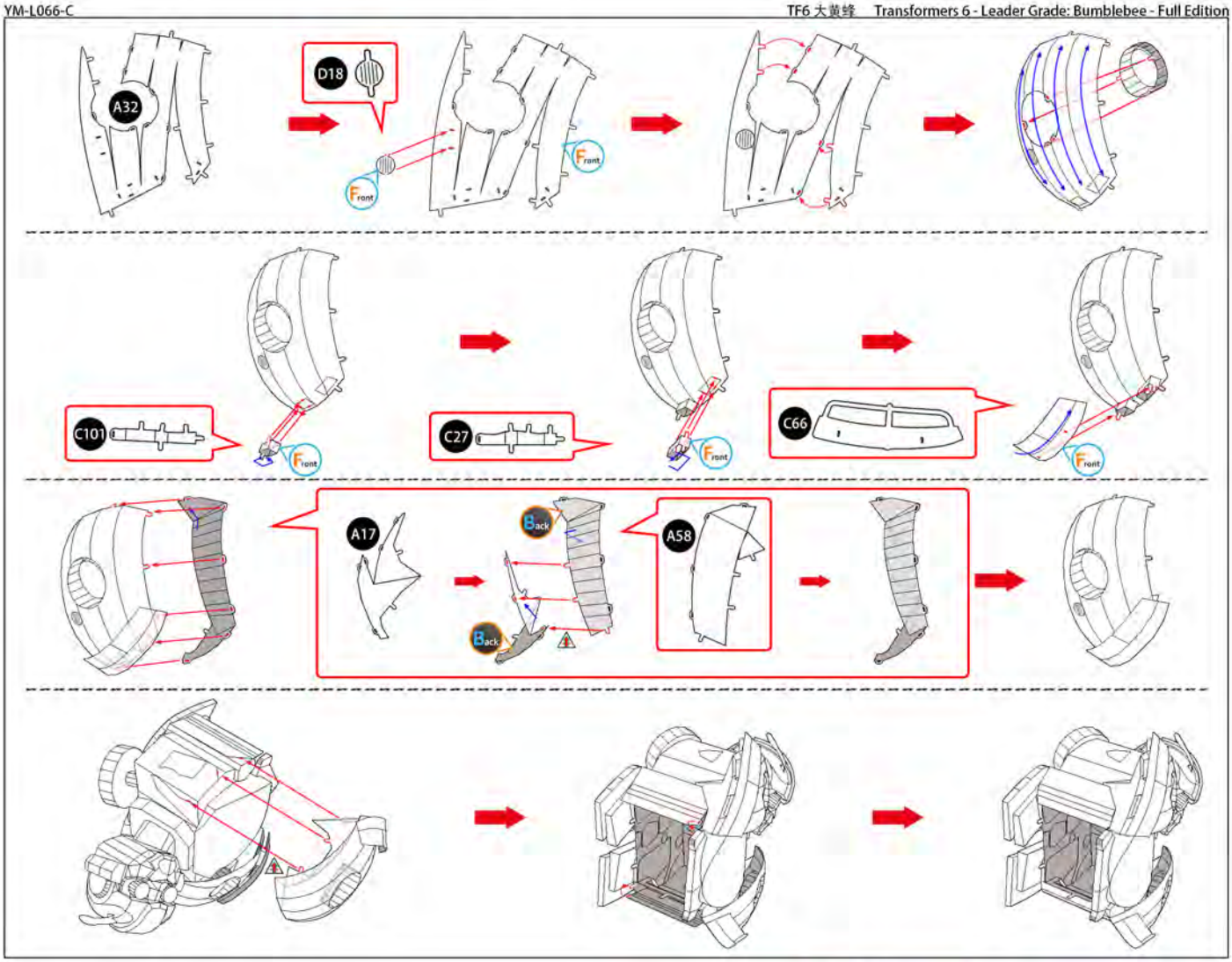
A32
D18
Front
Front
C101
Front
C27
Front
C66
Front
A17
Back
Back
A58

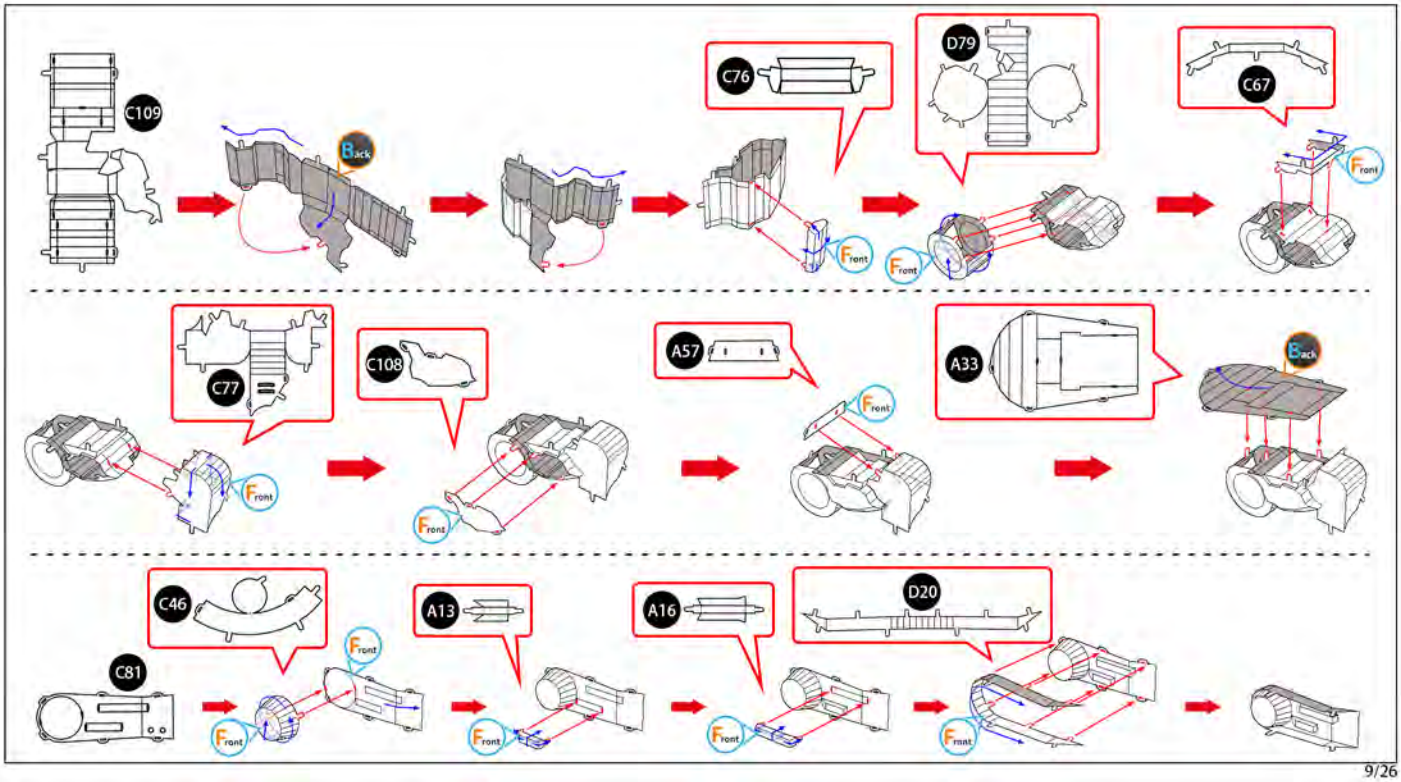
C109
Back
C76
Front
D79
Front
C67
Front
C77
Front
C108
Front
A57
Front
A33
Back
C81
C46
Front
Front
A13
Front
A16
Front
D20
Front

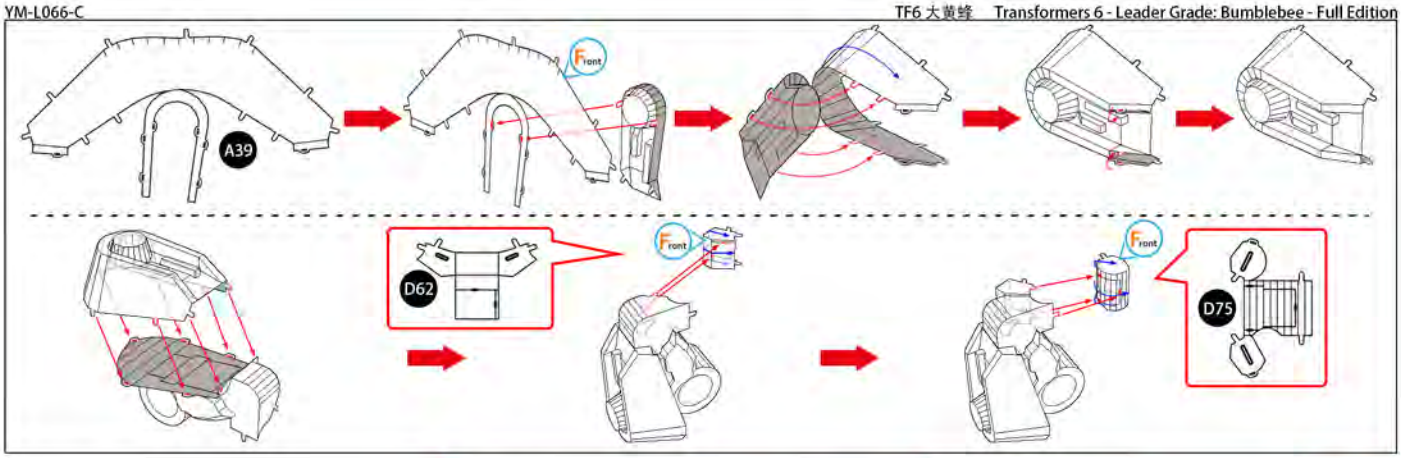
A39
Front
D62
Front
Front
D75

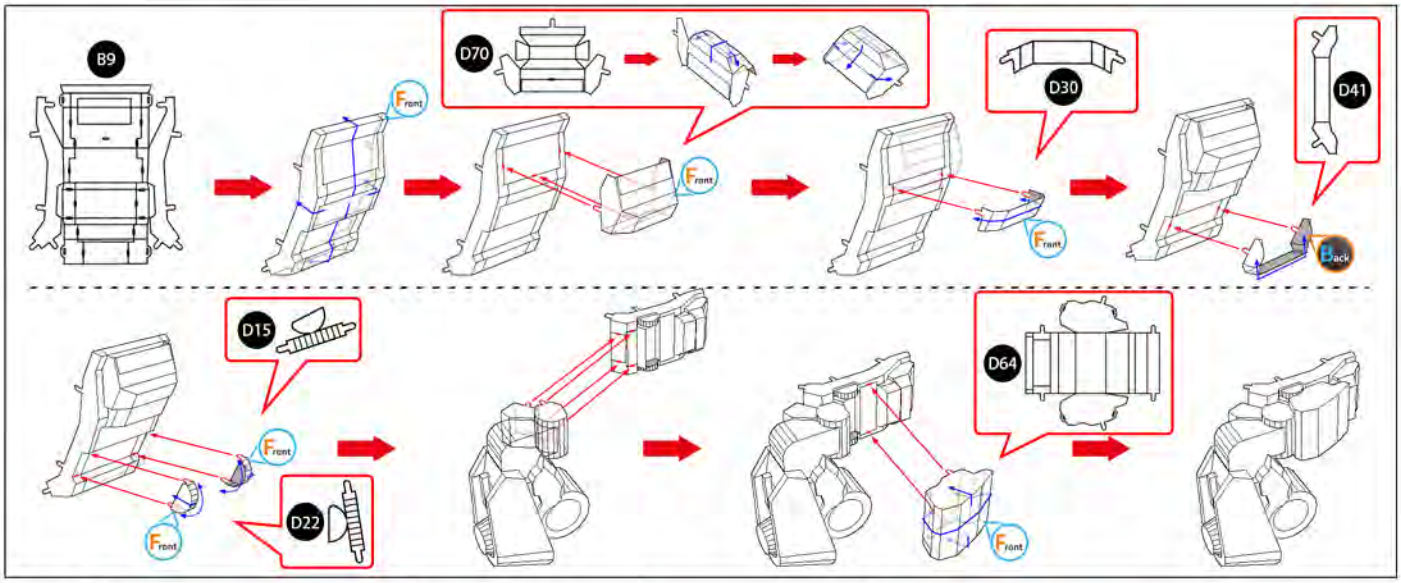
B9
Front
D70
Front
D30
Front
D41
Back
D15
Front
D22
Front
D64
Front

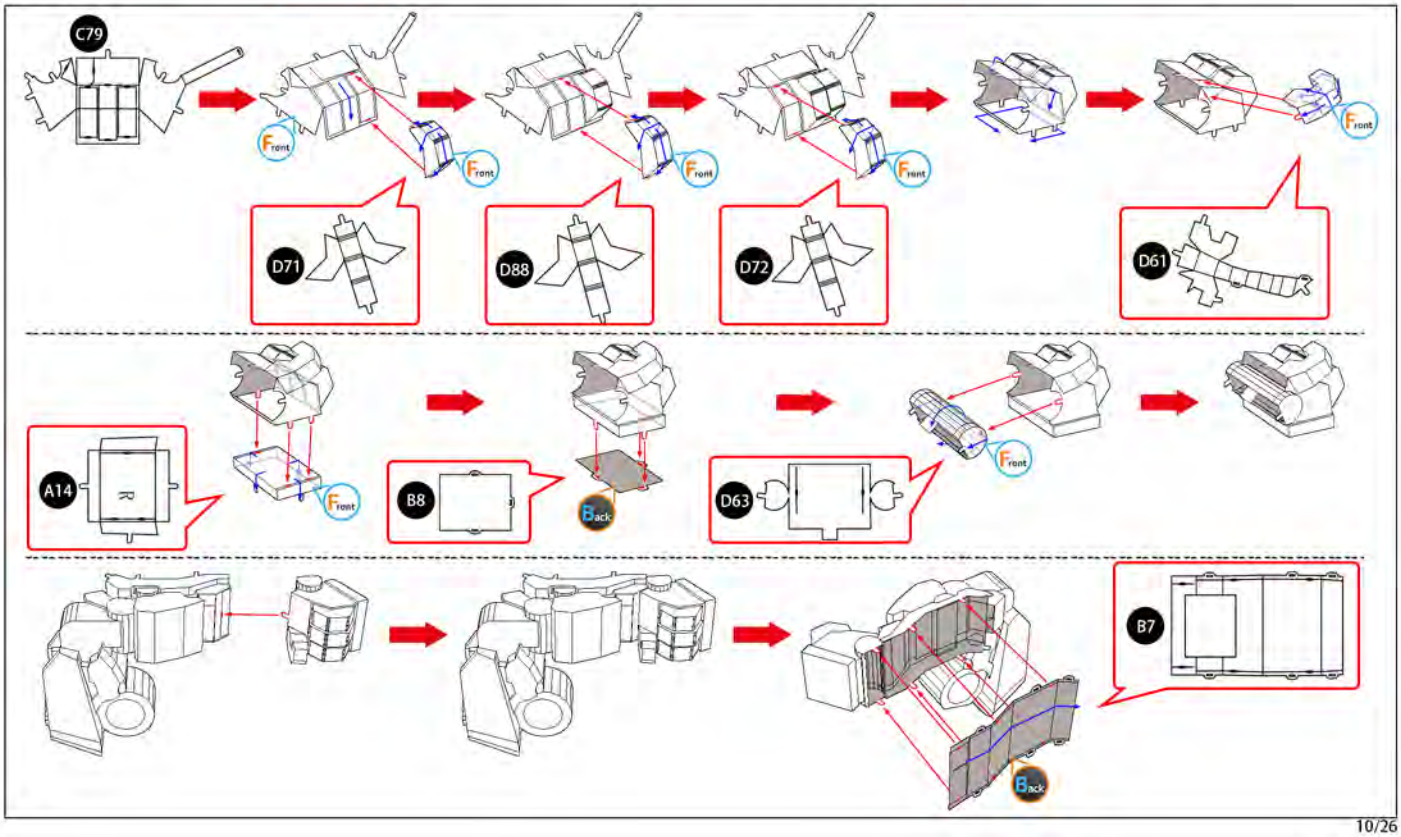
C79
Front
Front
Front
Front
Front
D71
D88
D72
D61
A14
R
Front
B8
Back
D63
Front
B7
Back

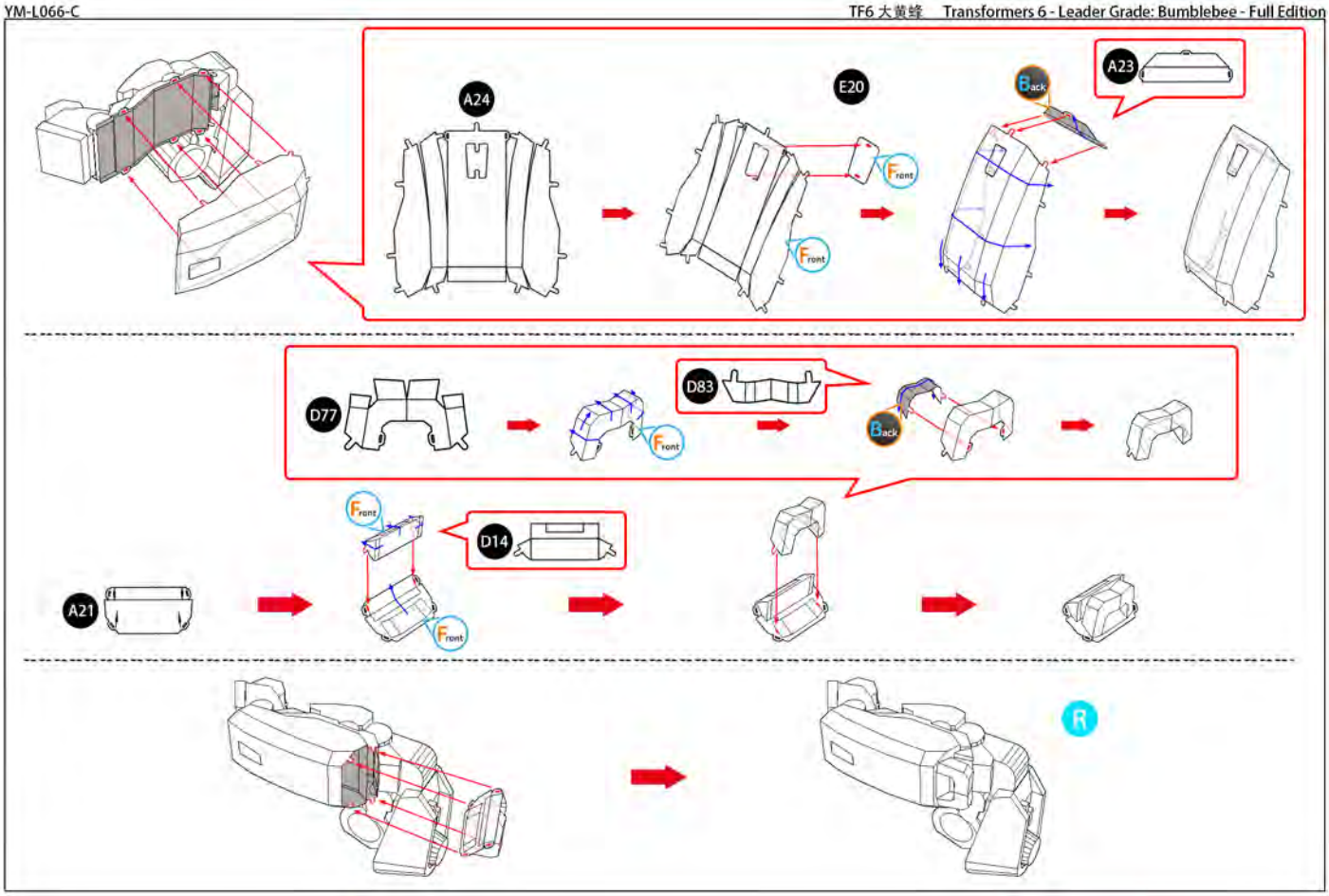
A24
E20
Back
A23
Front
Front
D77
D83
Front
Back
Front
D14
A21
Front
Front
R

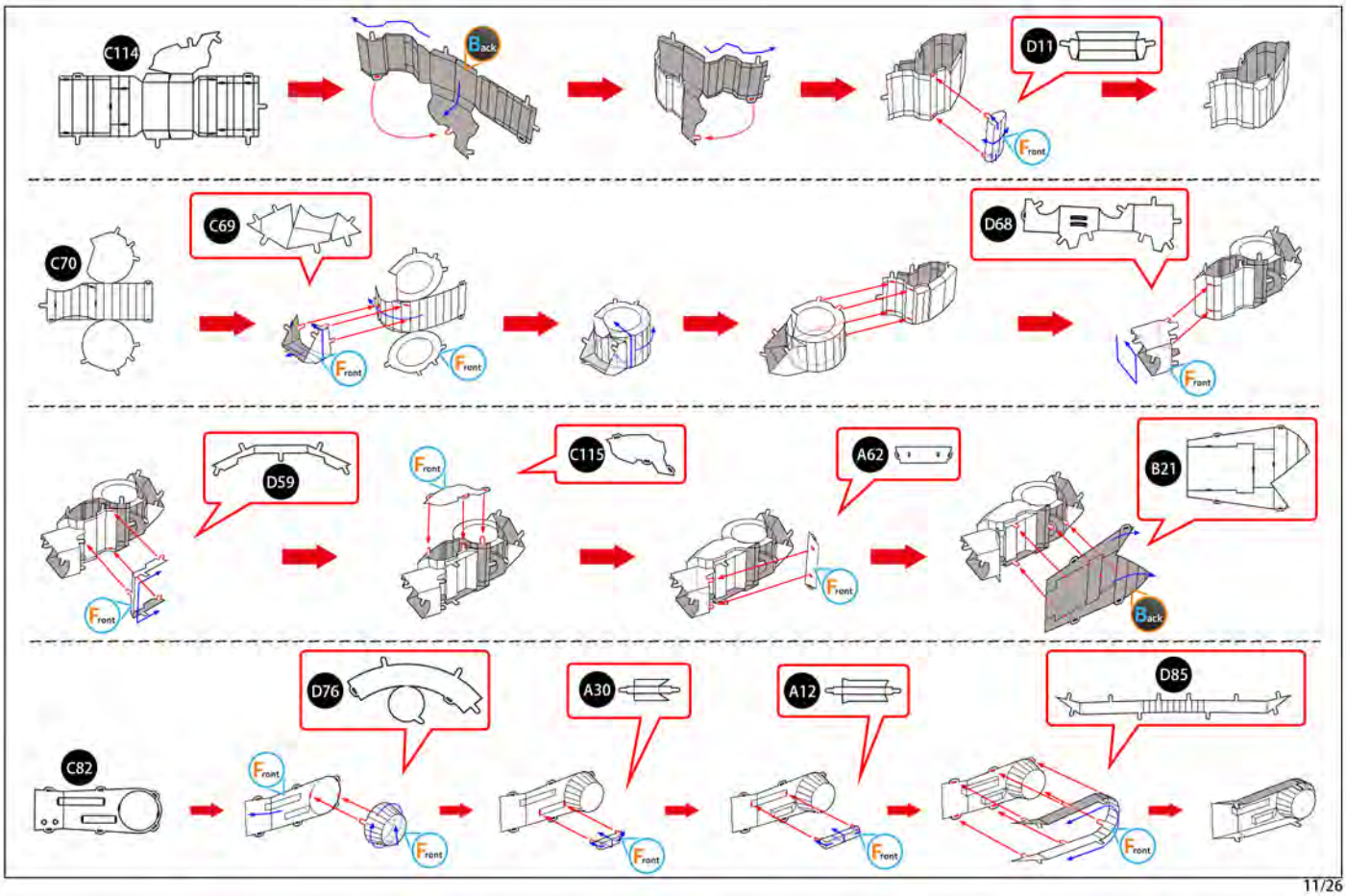
C114
Back
D11
Front
C70
C69
Front
Front
D68
Front
D59
Front
Front
C115
A62
Front
B21
Back
C82
Front
D76
Front
A30
Front
A12
Front
D85
Front

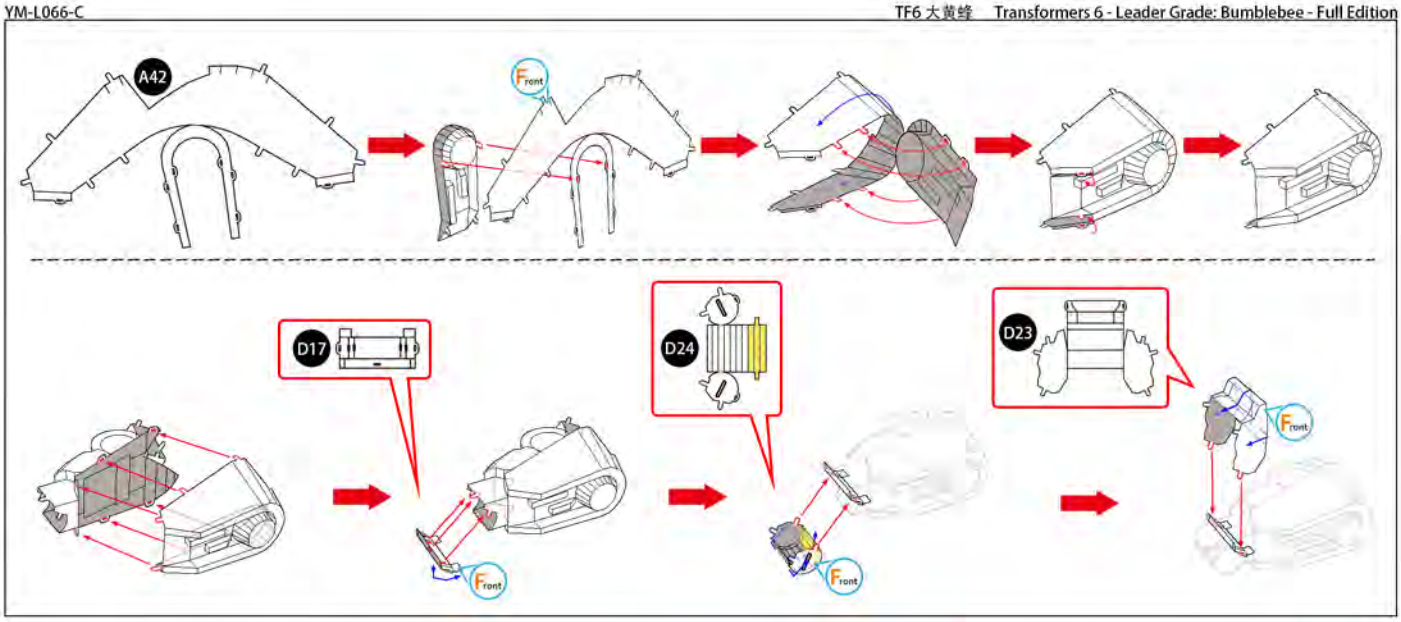
A42
Front
D17
D24
D23
Front
Front
Front

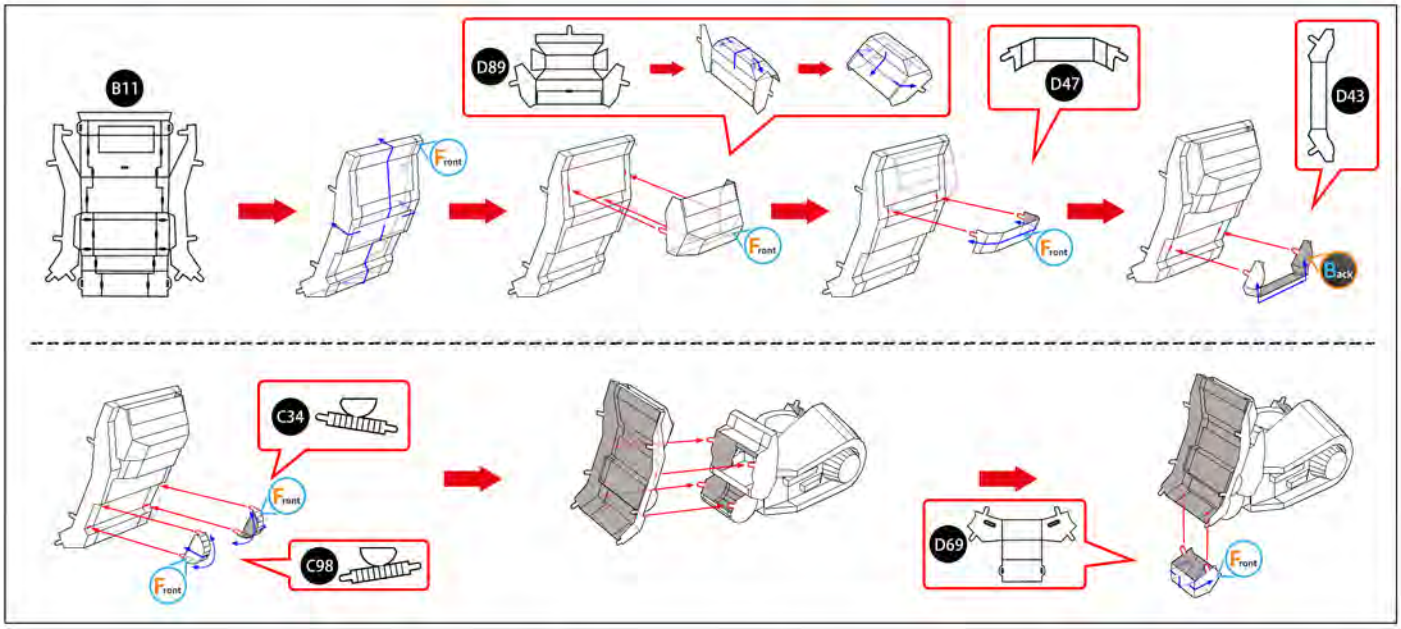
B11
D89
D47
D43
Front
Front
Front
Back
C34
Front
C98
Front
D69
Front

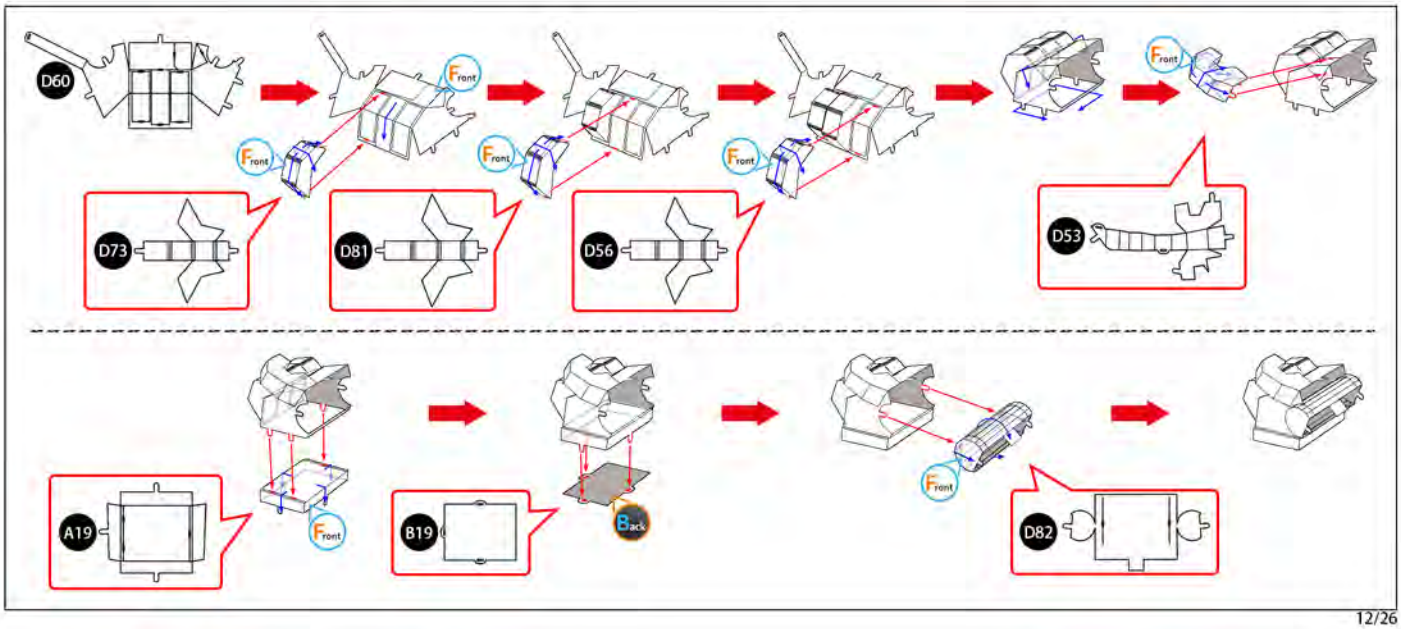
D60
Front
Front
Front
Front
Front
D73
D81
D56
D53
A19
Front
B19
Back
Front
D82

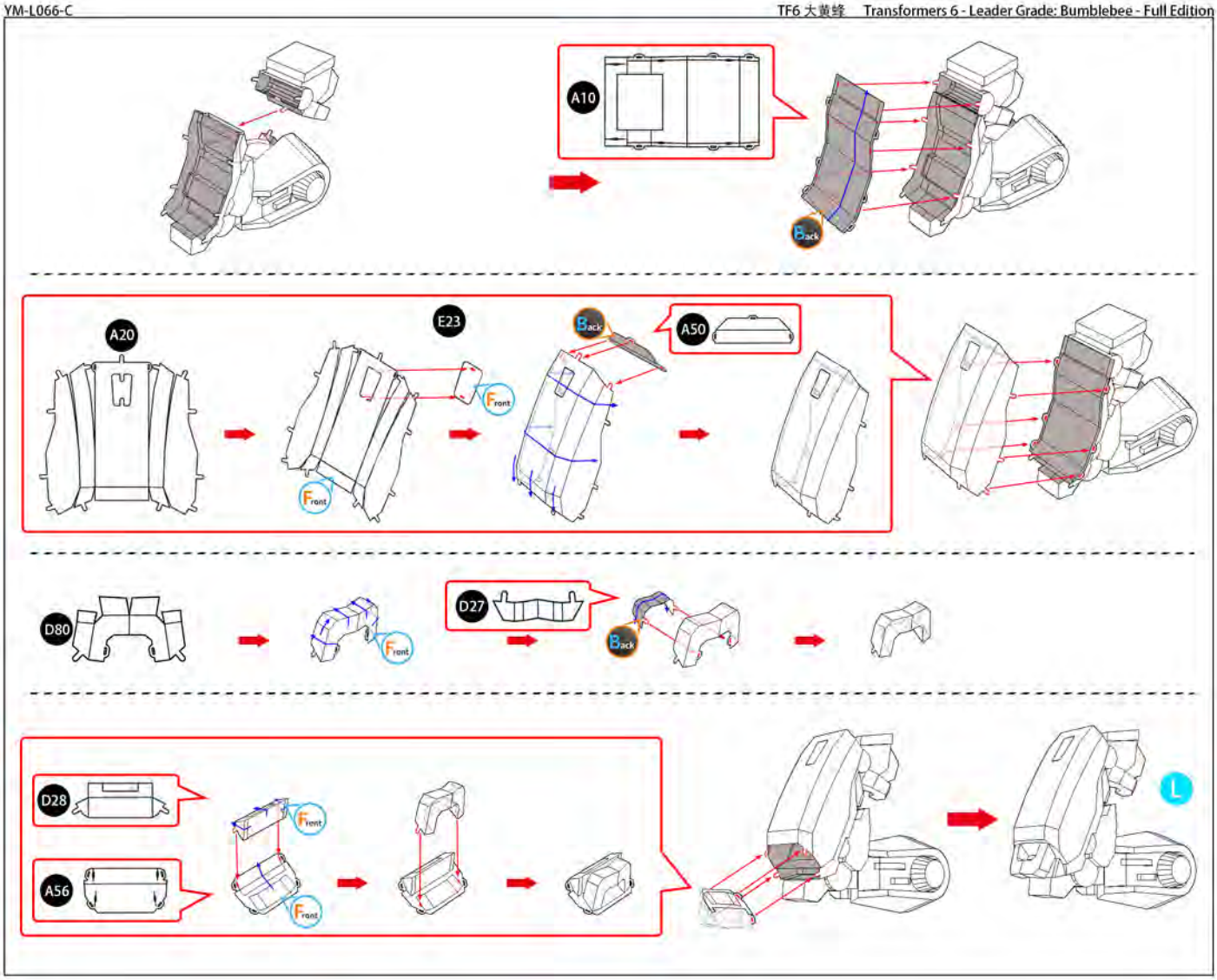
A10
Back
A20
E23
Front
Front
Back
A50
D80
Front
D27
Back
D28
A56
Front
Front
L

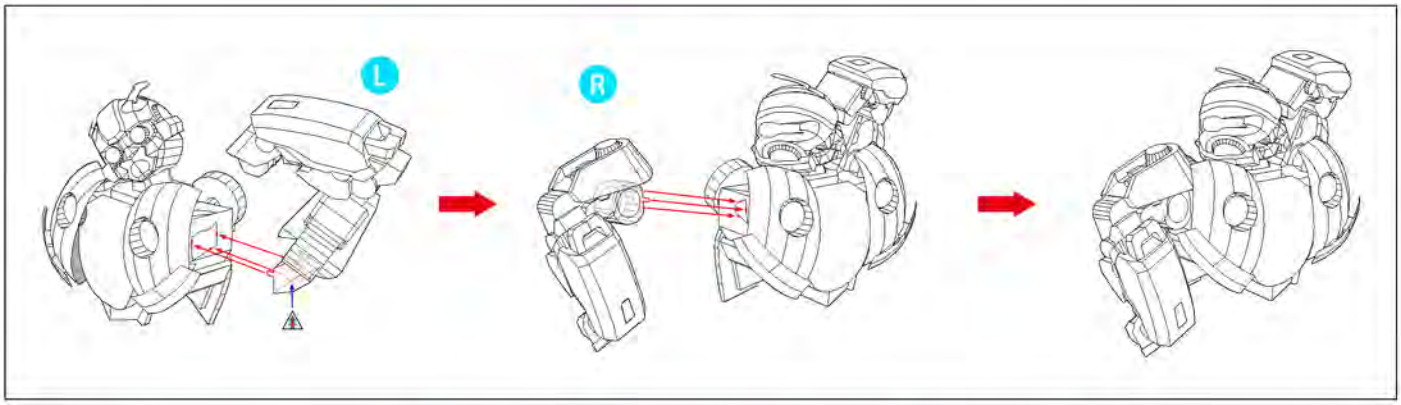
L
R

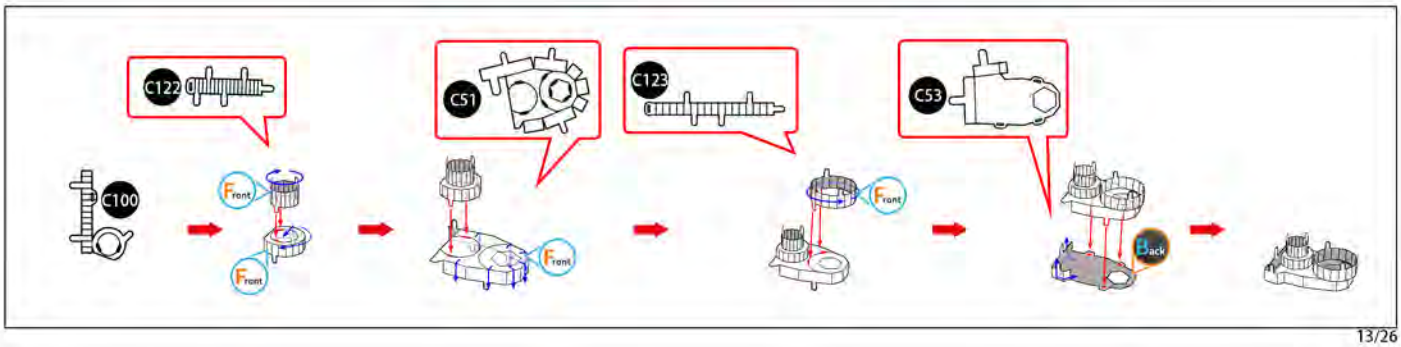
C122
C100
Front
Front
C51
Front
C123
Front
C53
Back

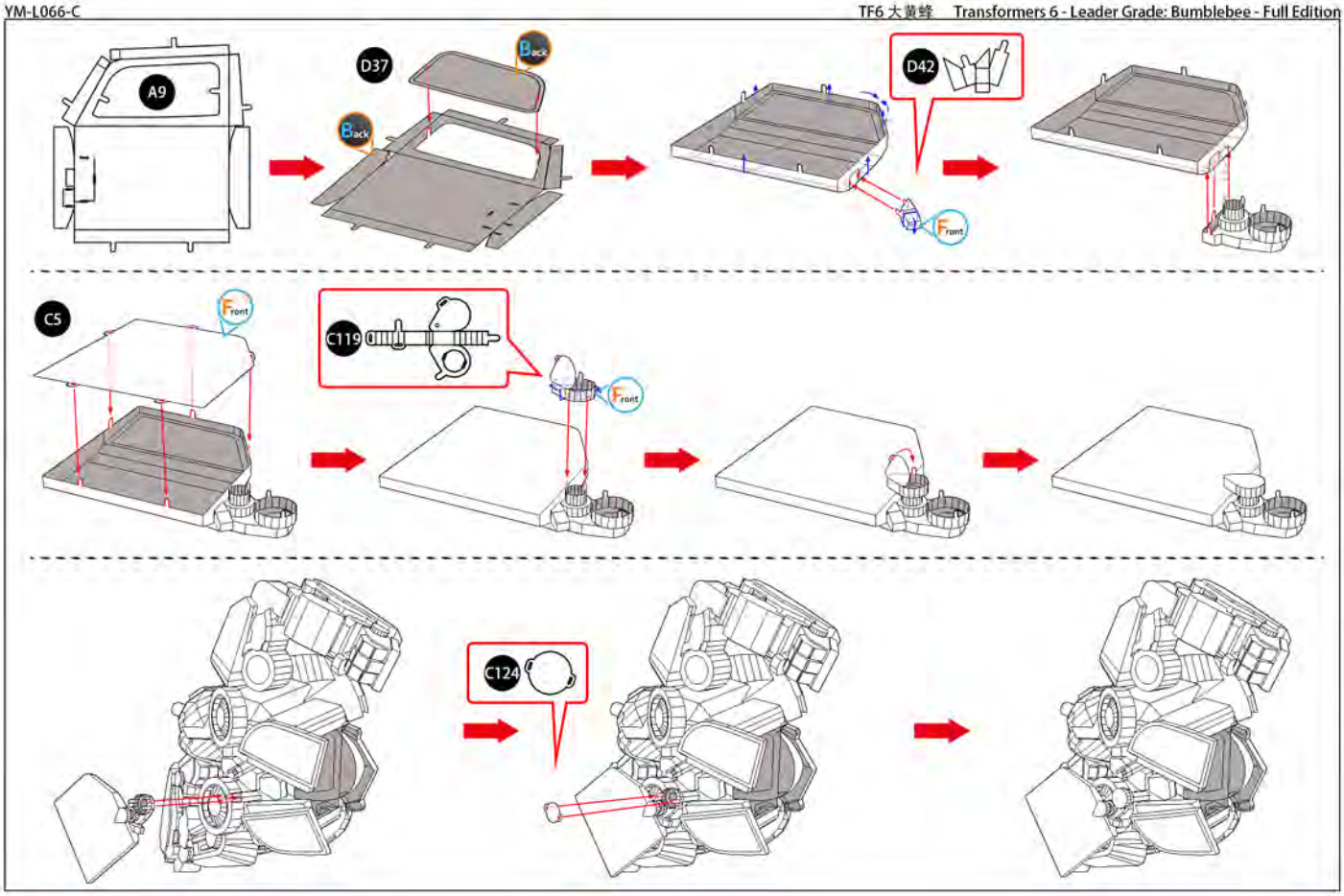
A9
D37
Back
Back
D42
Front
C5
Front
C119
Front
C124

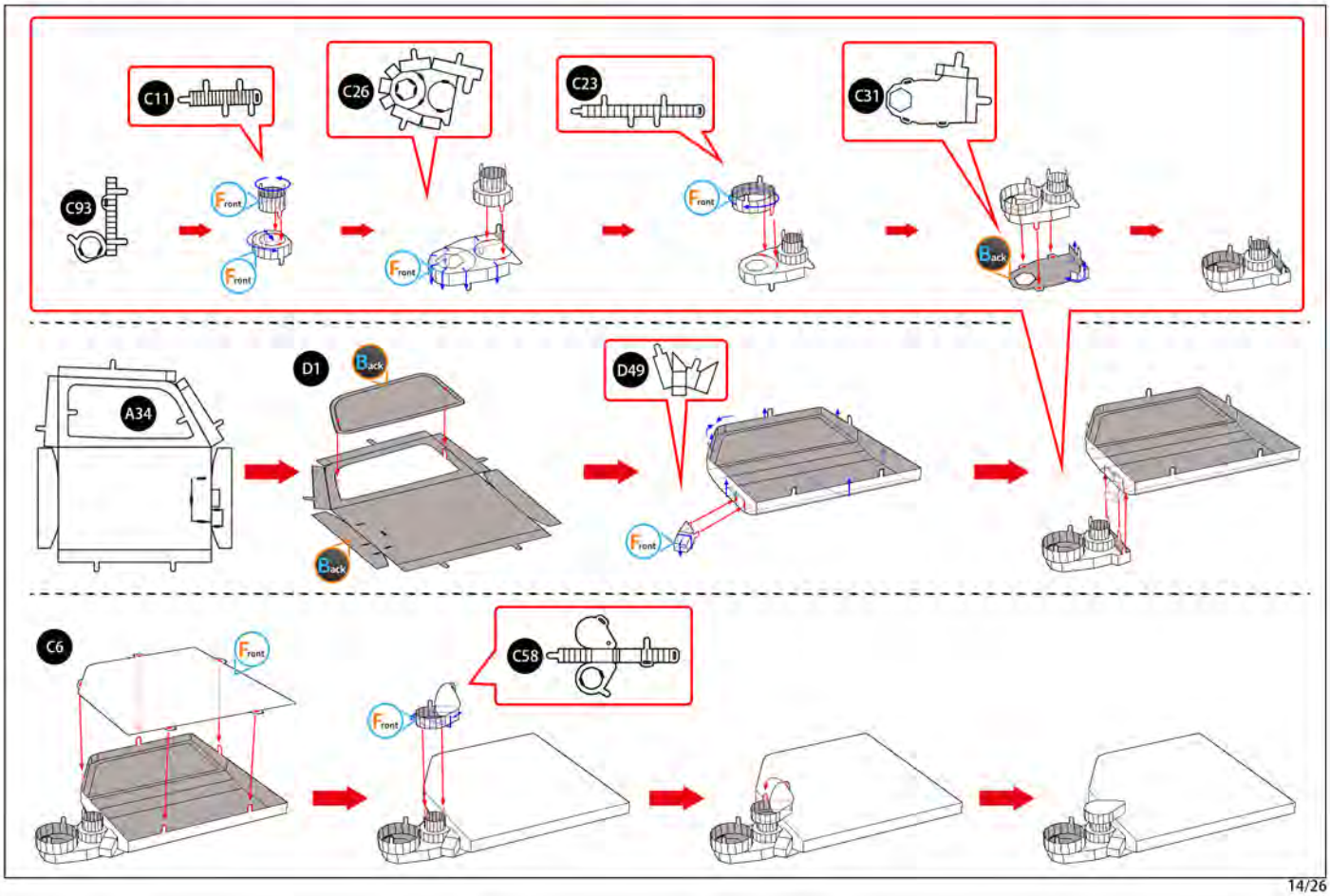
C11
C26
C23
C31
C93
Front
Front
Front
Front
Front
Back
A34
D1
Back
Back
D49
Front
C6
Front
C58
Front

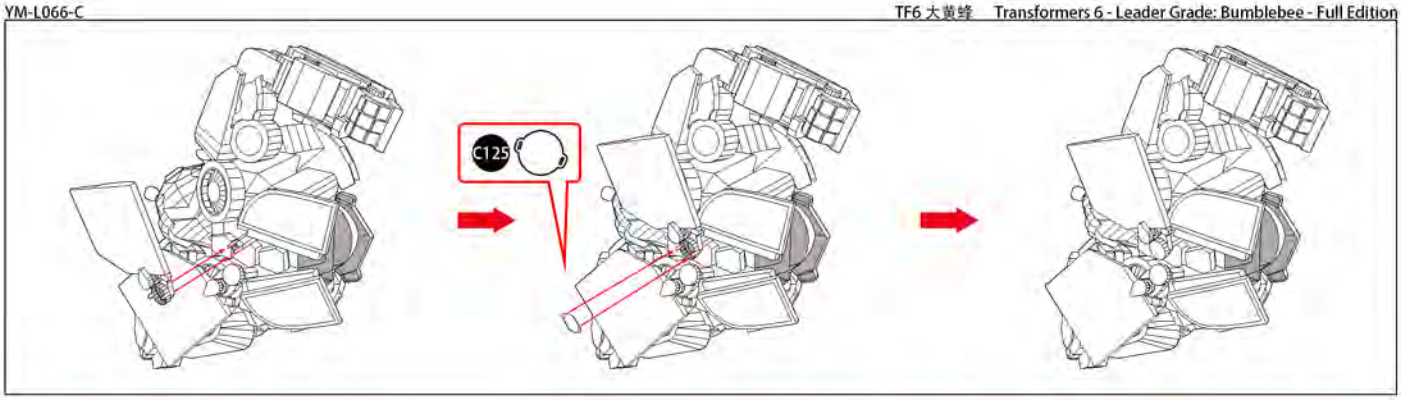
C125

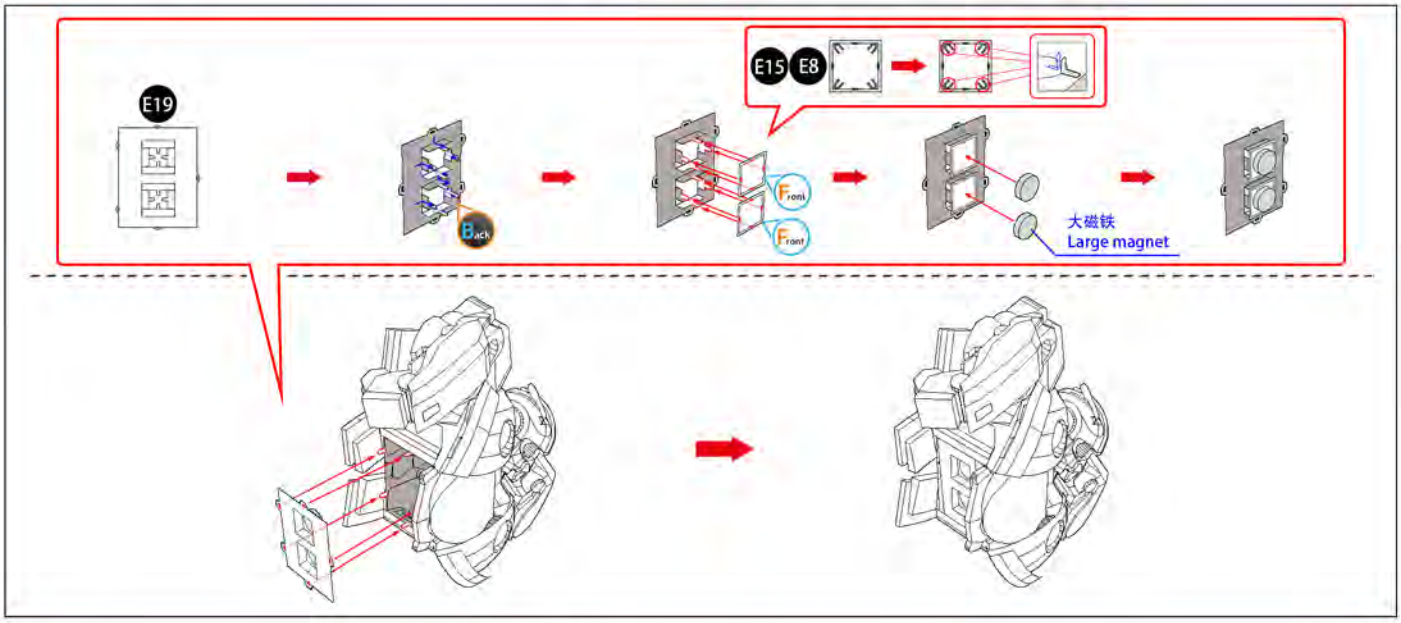
E19
Back
E15
E8
Front
Front
大磁铁
Large magnet

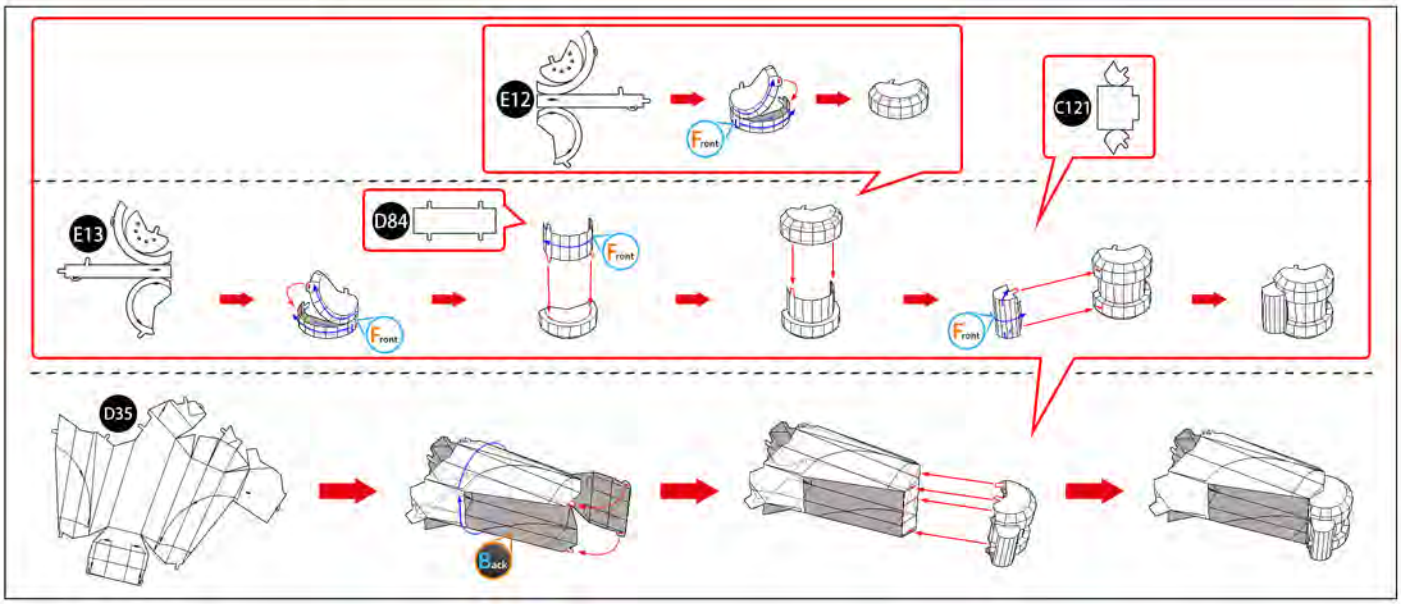
E12
Front
C121
E13
D84
Front
Front
Front
D35
Back

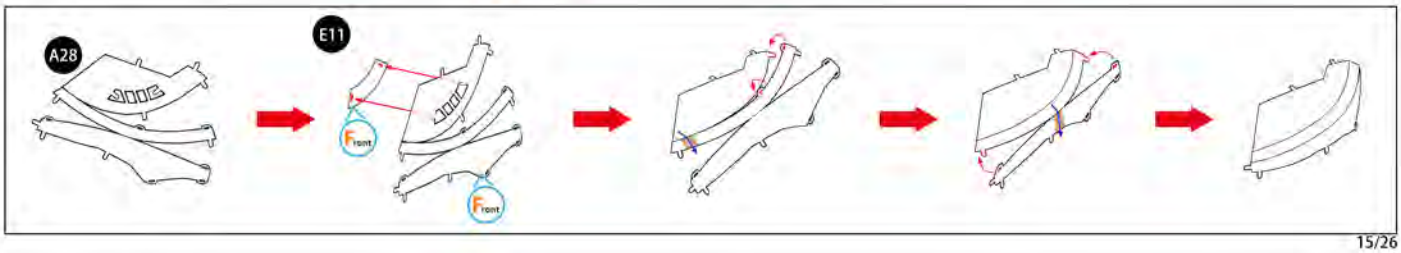
A28
E11
Front
Front

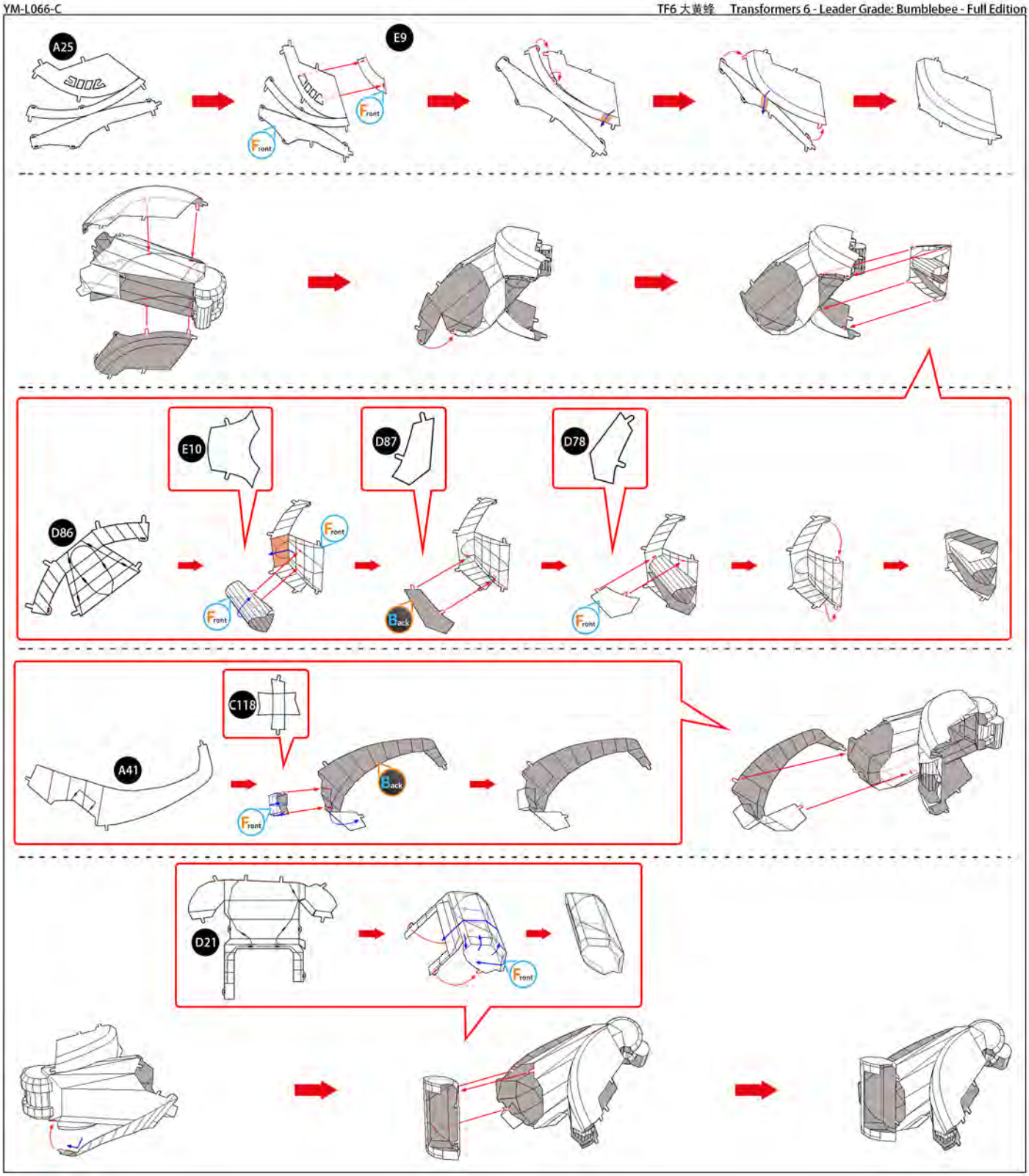
A25
E9
Front
Front
E10
D87
D78
D86
Front
Front
Back
Front
C118
A41
Back
Front
D21
Front

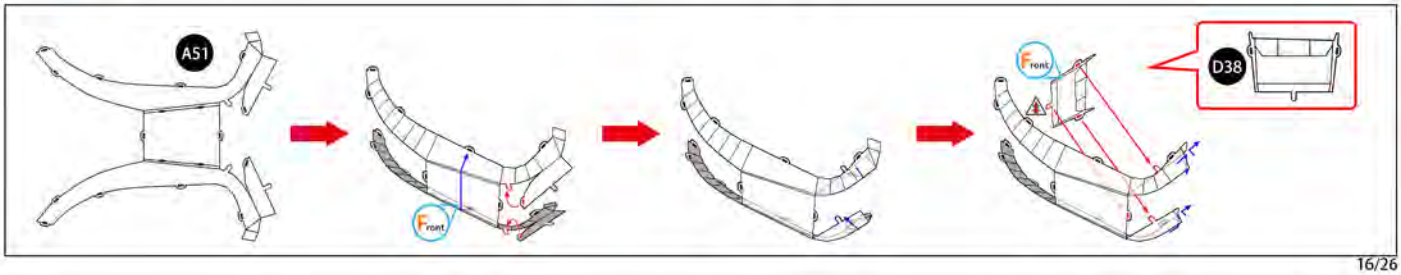
A51
Front
Front
D38

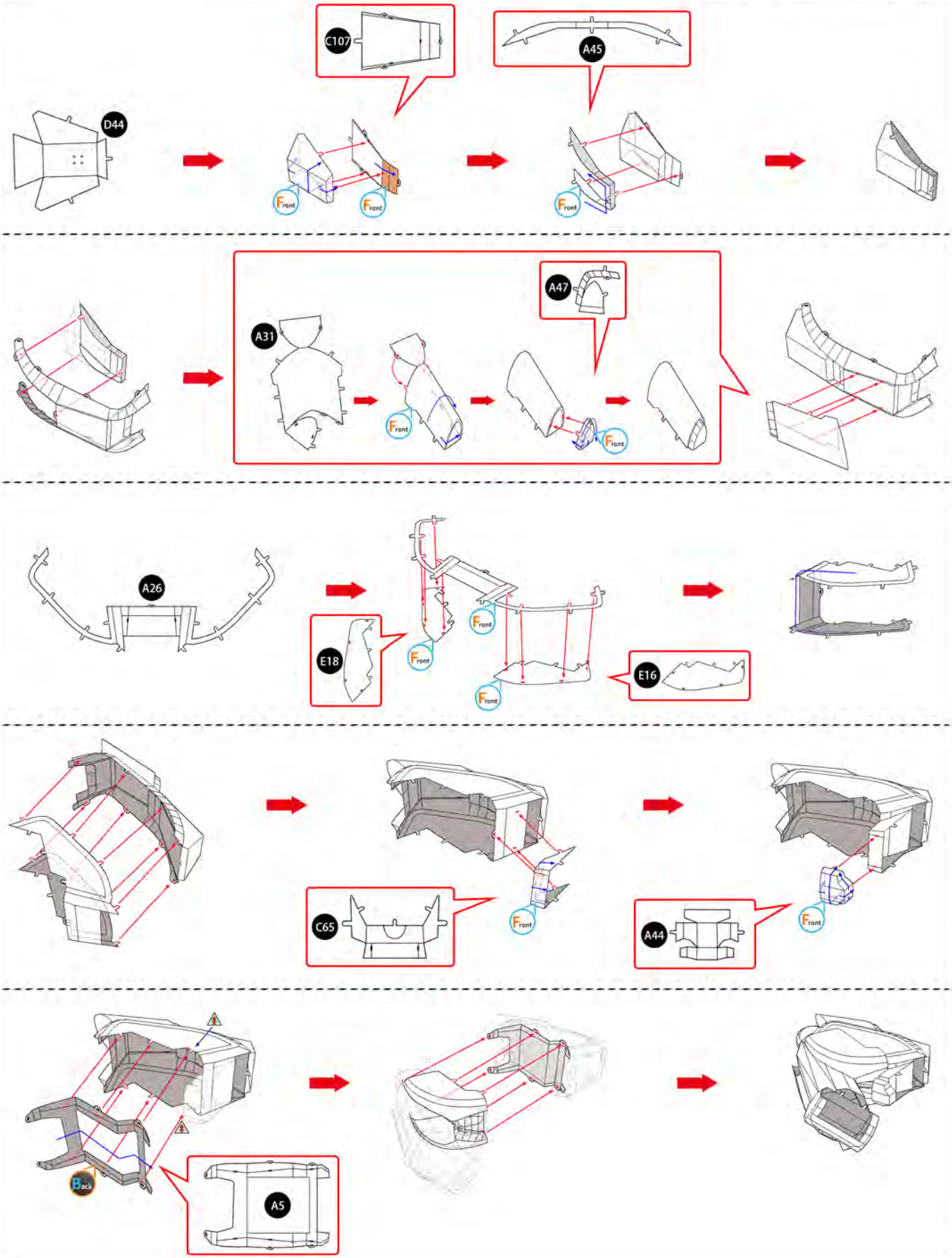
C107
A45
D44
Front
Front
Front
A47
A31
Front
Front
A26
E18
Front
Front
Front
E16
C65
Front
A44
Front
Back
A5

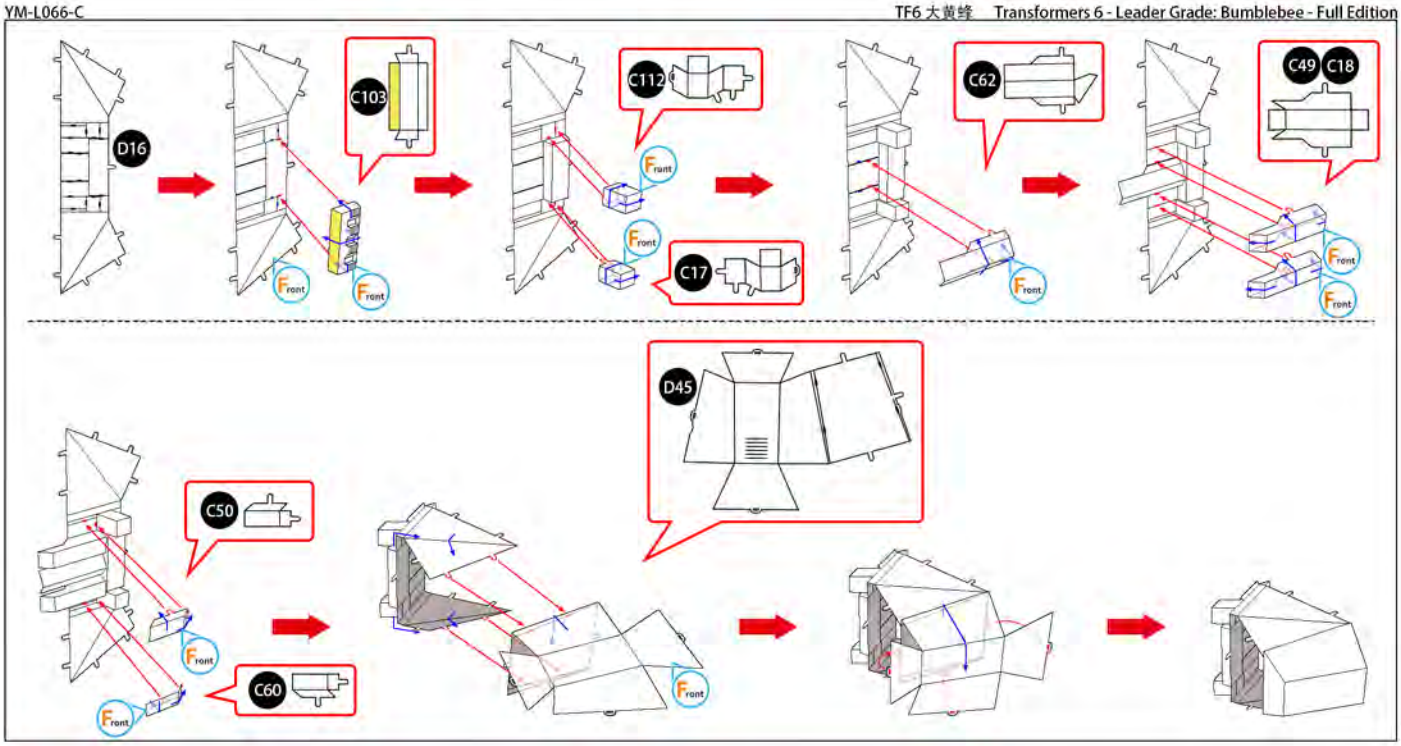
D16
C103
Front
Front
C112
Front
Front
C17
C62
Front
C49
C18
Front
Front
D45
C50
Front
Front
C60
Front

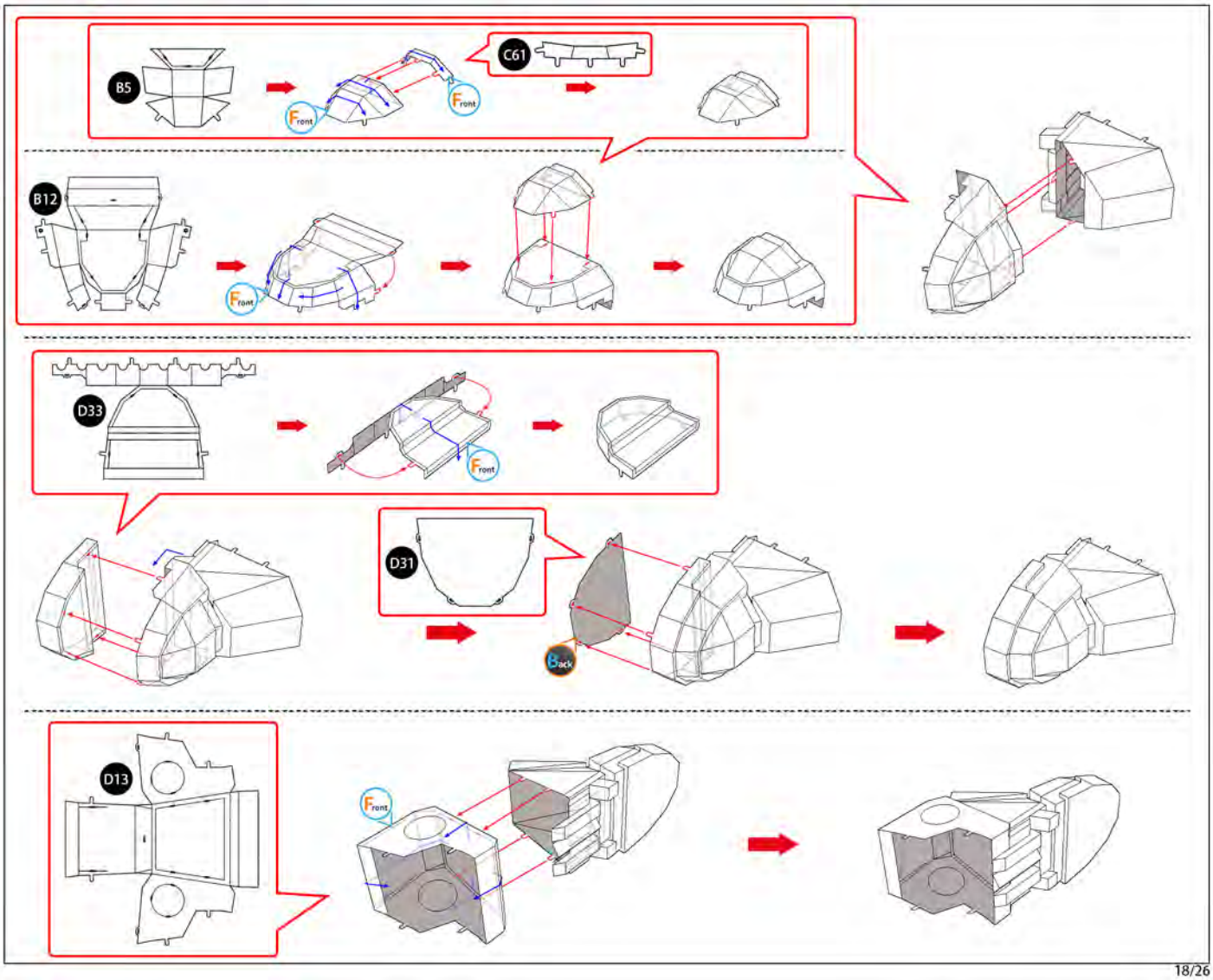
B5
Front
C61
Front
B12
Front
D33
Front
D31
Back
D13
Front

D29
Back
C72
Front

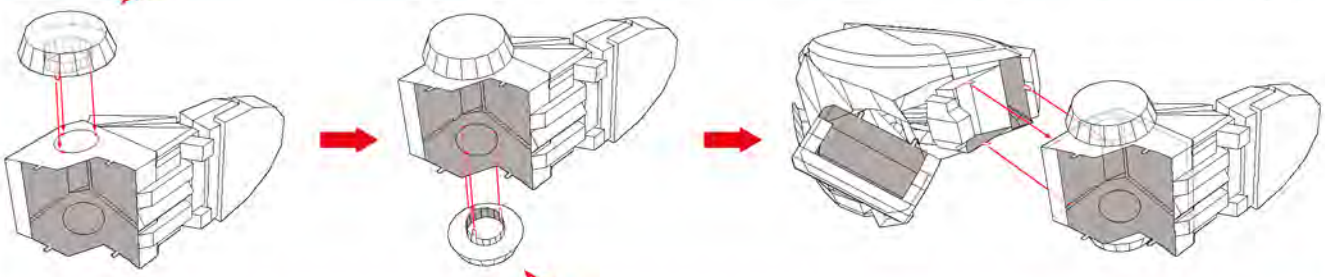

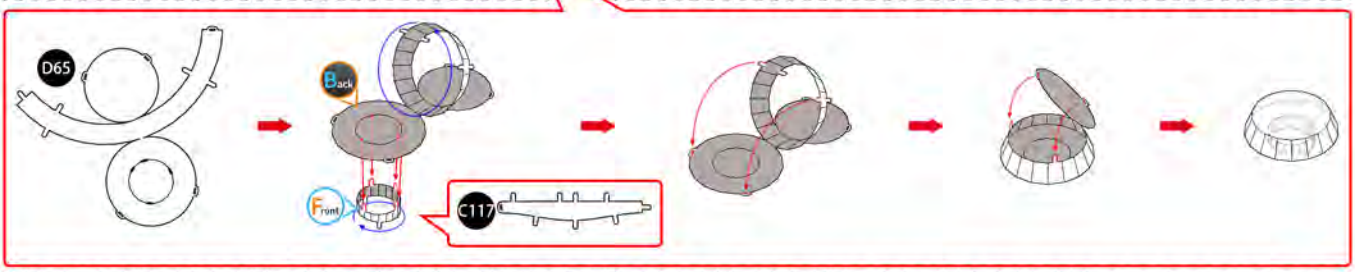
D65
Back
Front
C117

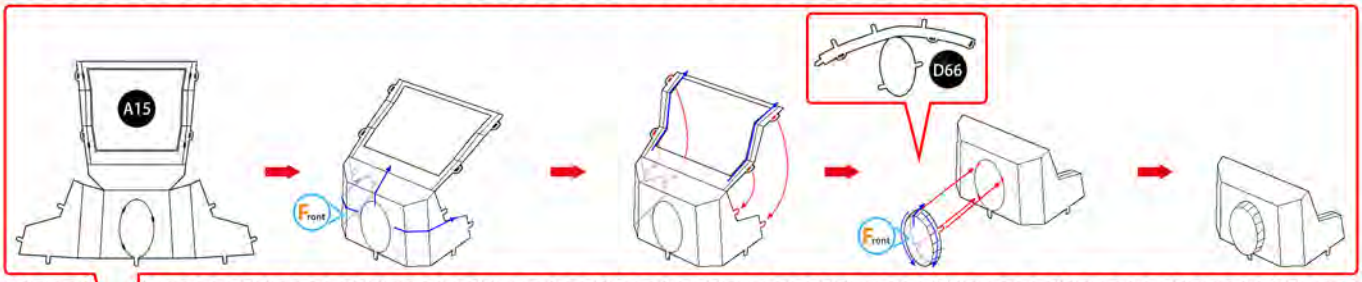
A15
Front
D66
Front

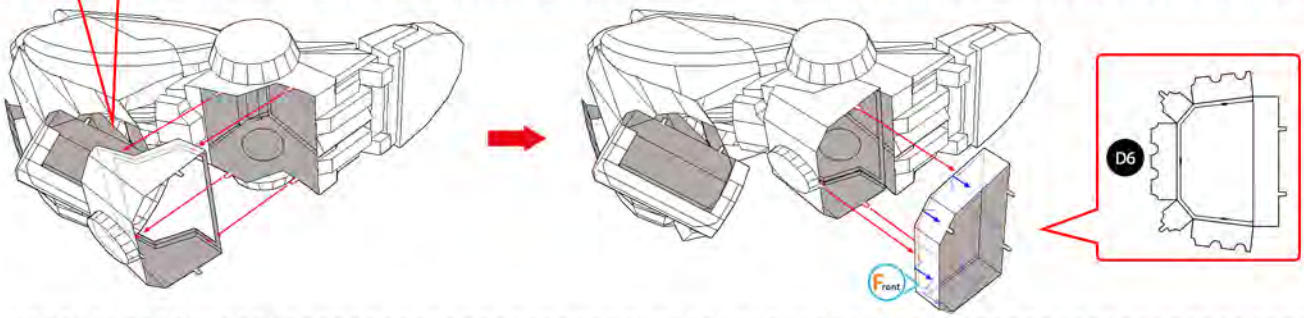
D6
Front

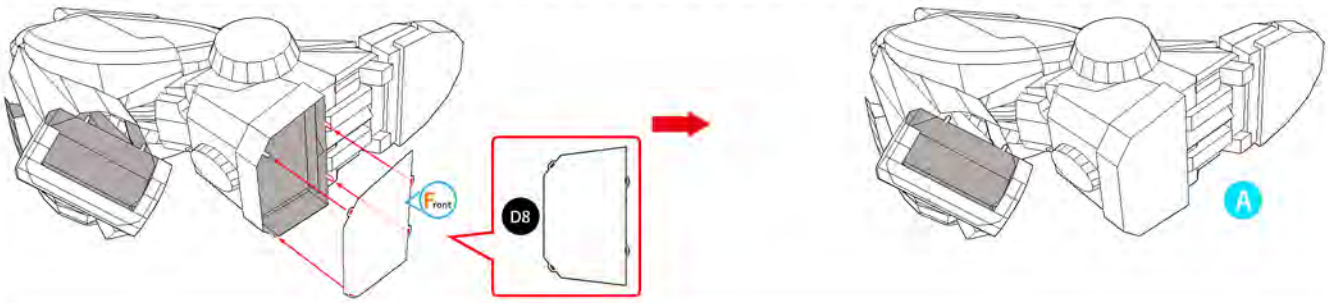
Front
D8
A

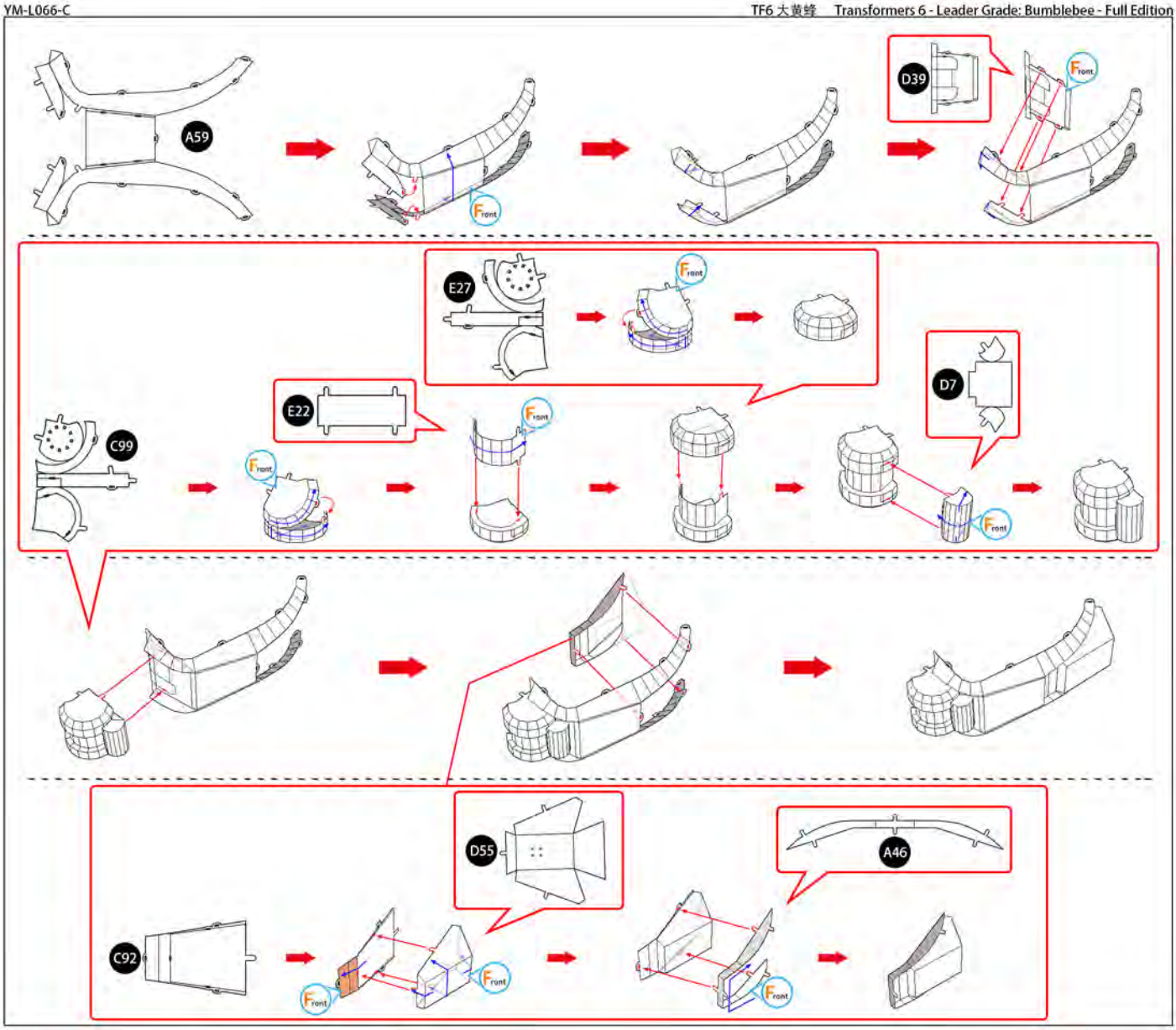
A59
D39
Front
E27
E22
C99
D7
D55
A46
C92

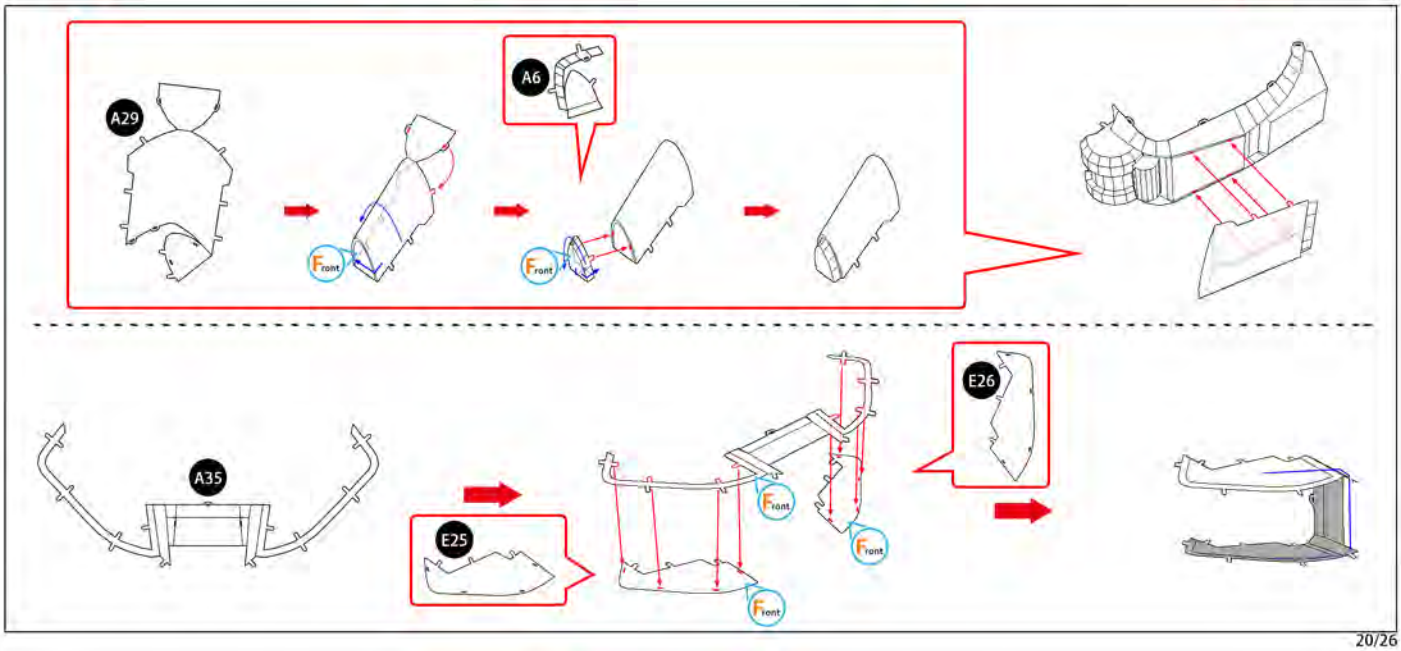
A29
A6
Front
A35
E25
E26

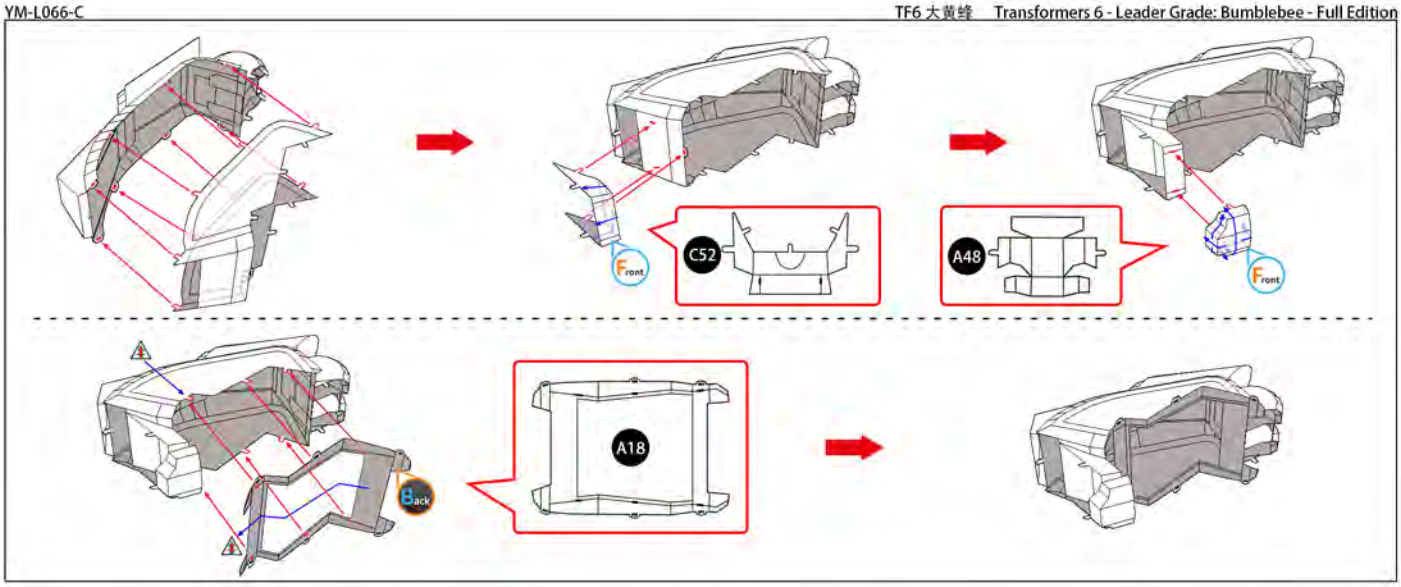
Front
C52
A48
Front
Back
A18

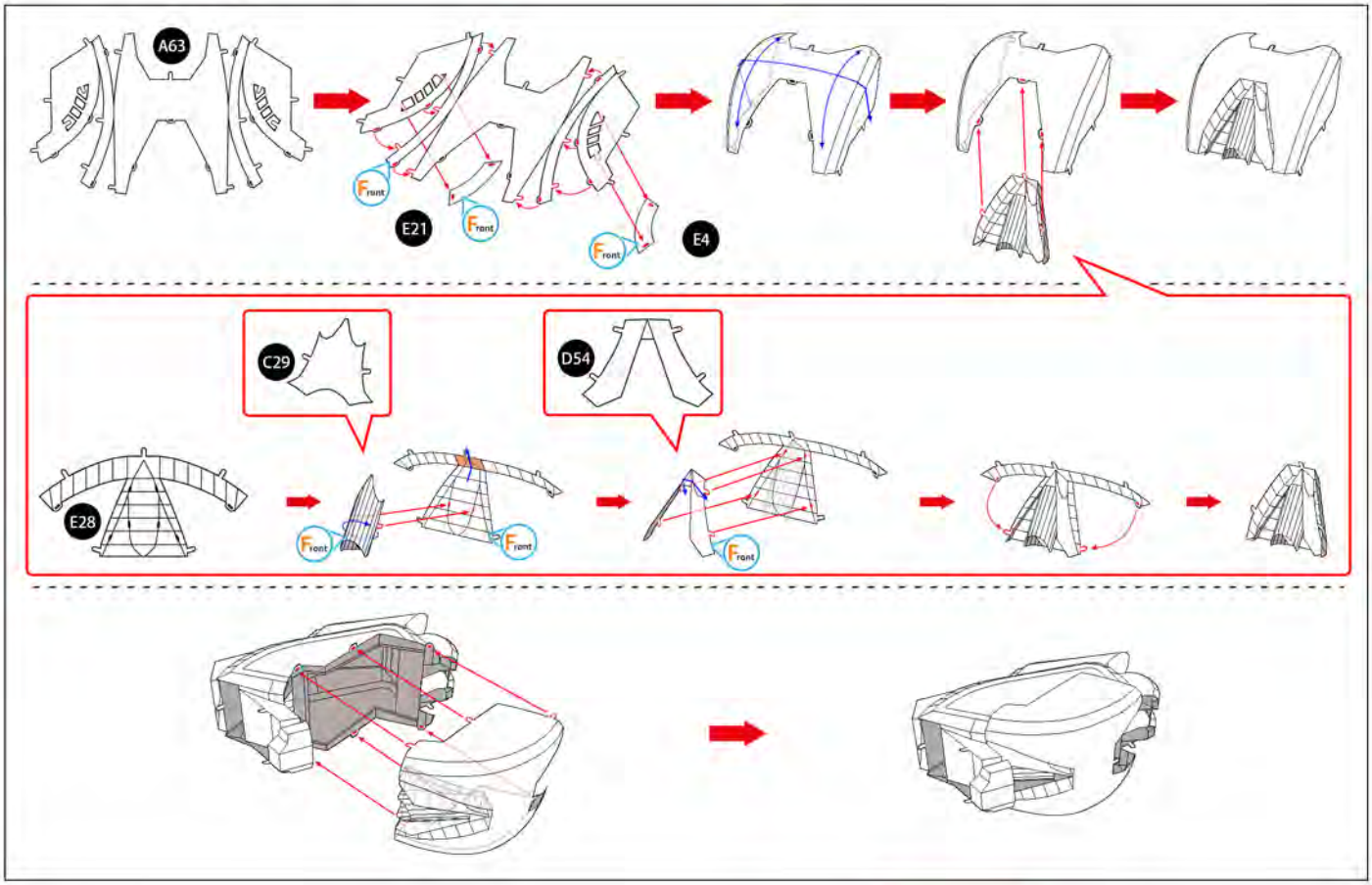
A63
Front
E21
Front
Front
E4
C29
D54
E28
Front
Front
Front

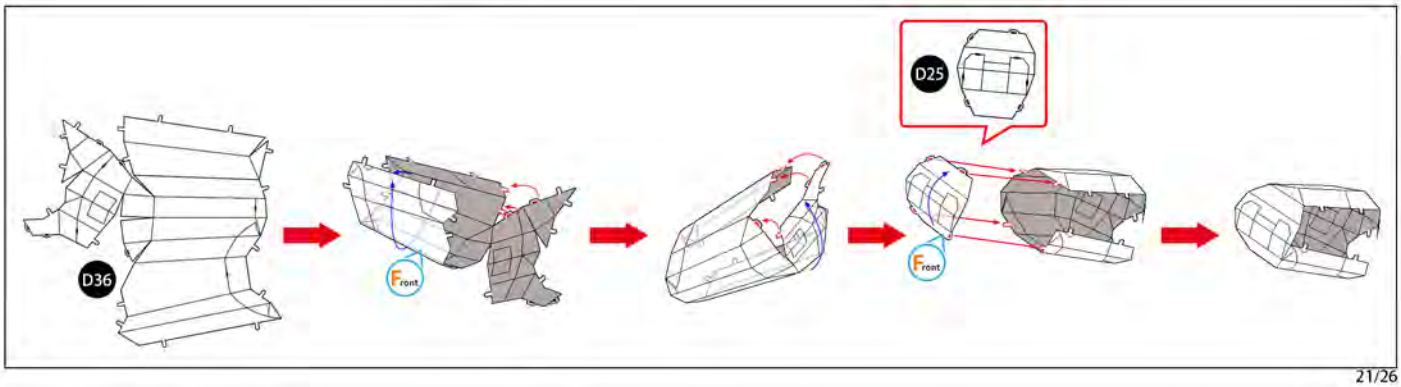
D25
D36
Front
Front

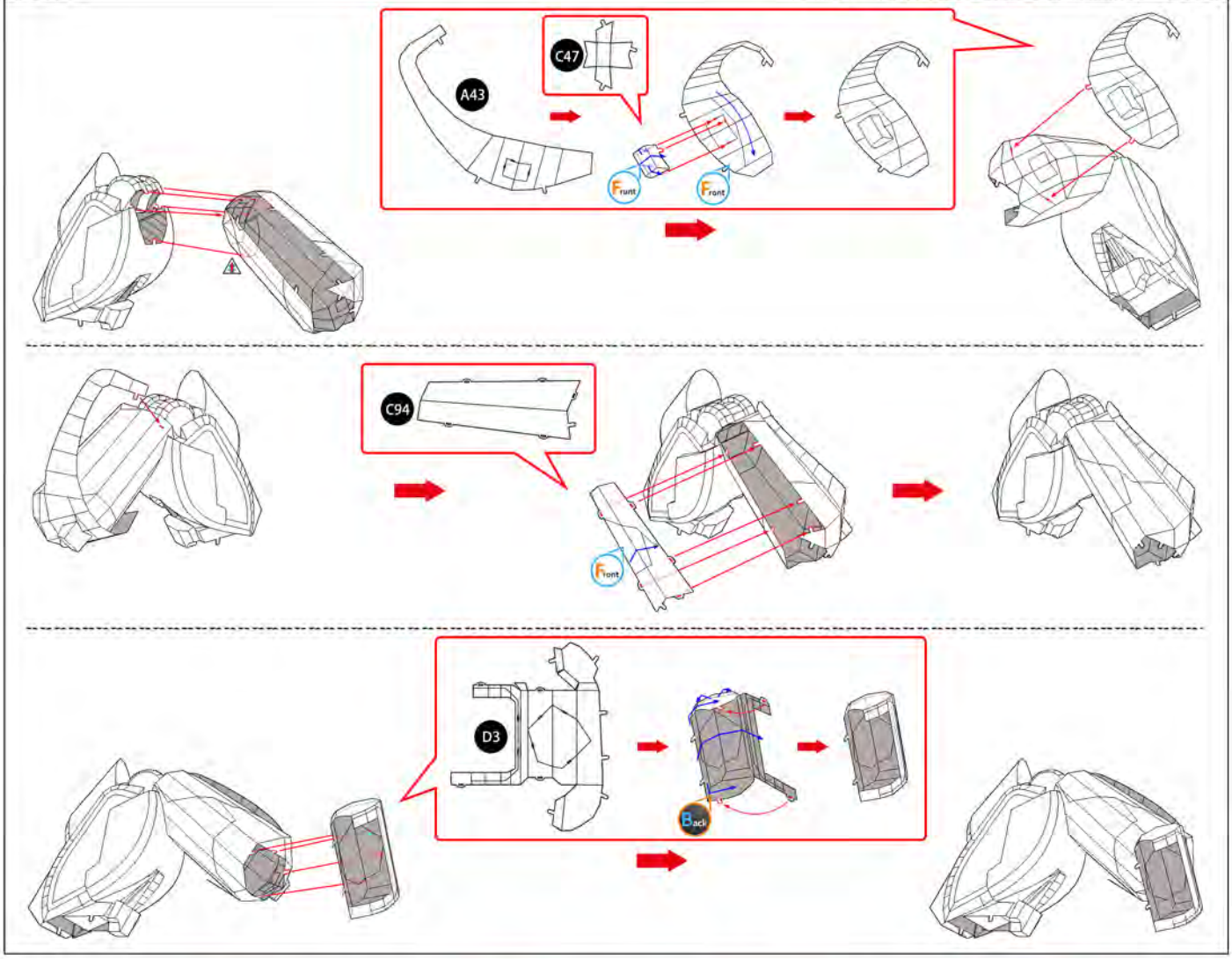
A43
C47
Front
Front
C94
Front
D3
Back

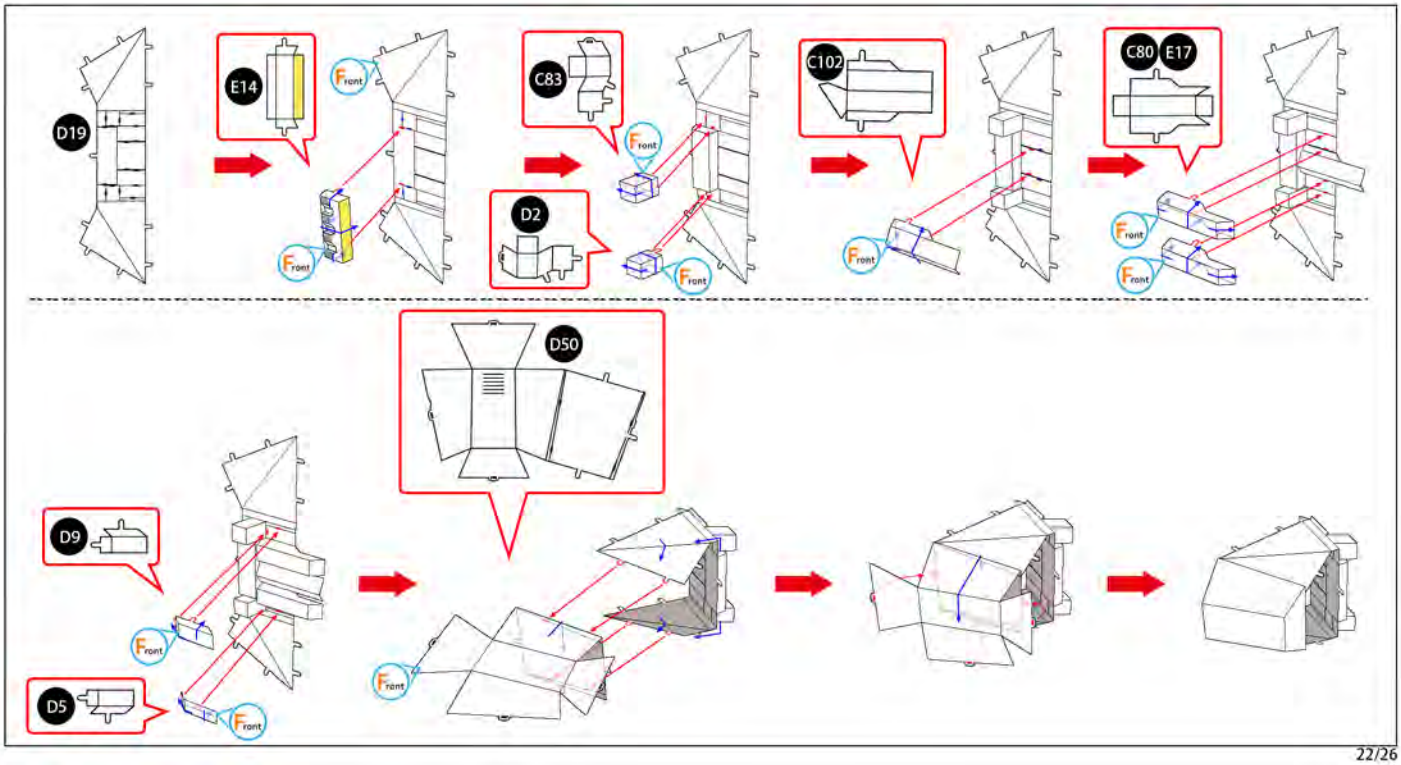
D19
E14
Front
Front
C83
Front
D2
Front
C102
Front
C80
E17
Front
Front
D50
D9
Front
D5
Front
Front

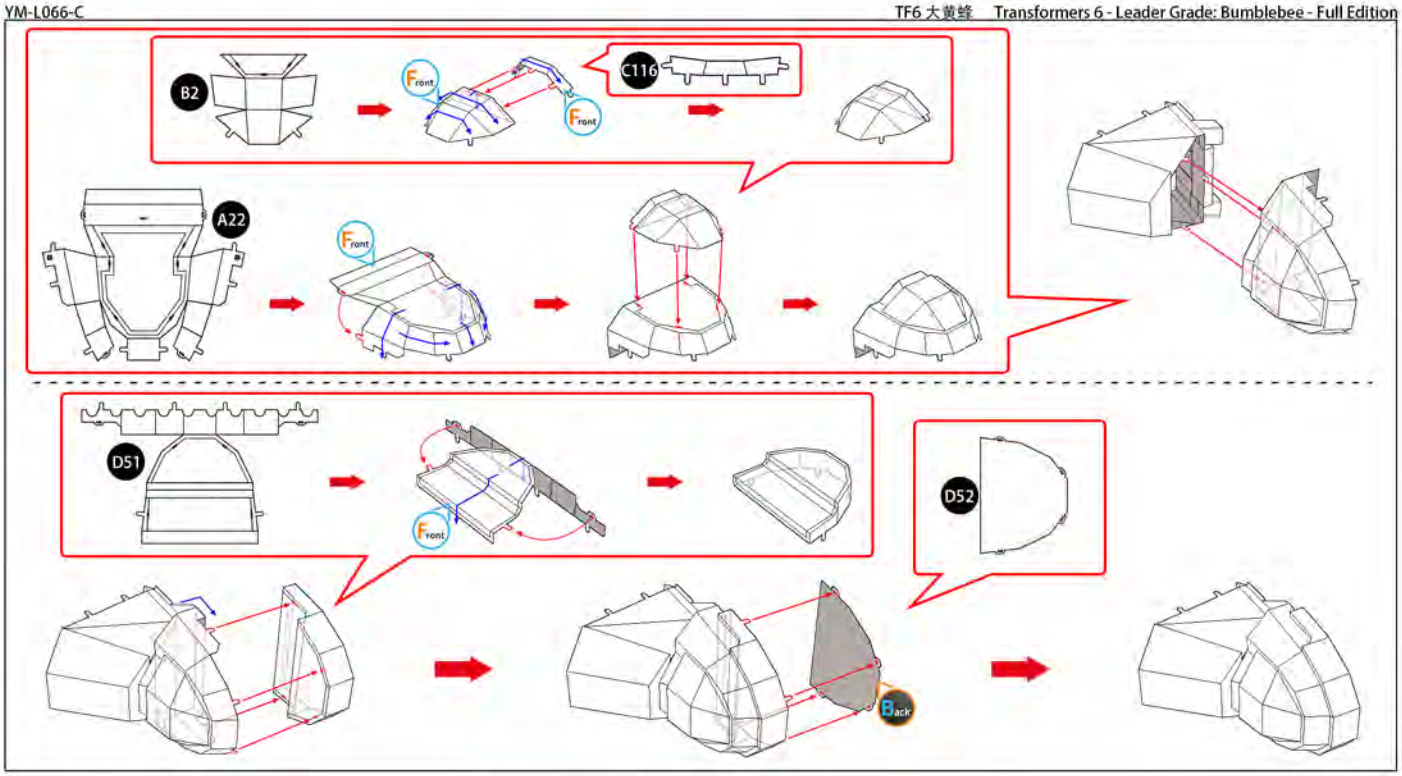
B2
Front
Front
C116
A22
Front
D51
Front
D52
Back

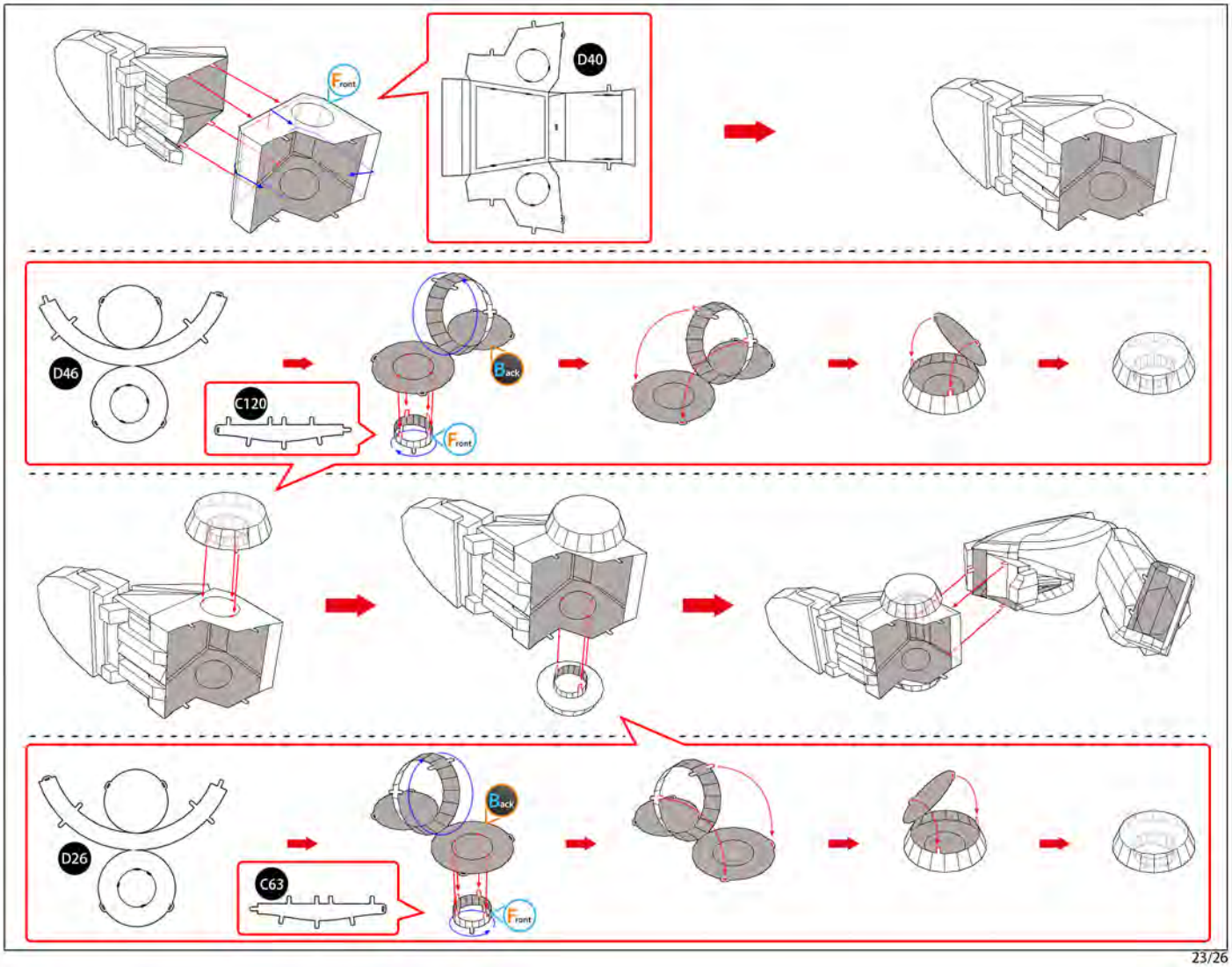
Front
D40
D46
C120
Back
Front
D26
C63
Back
Front

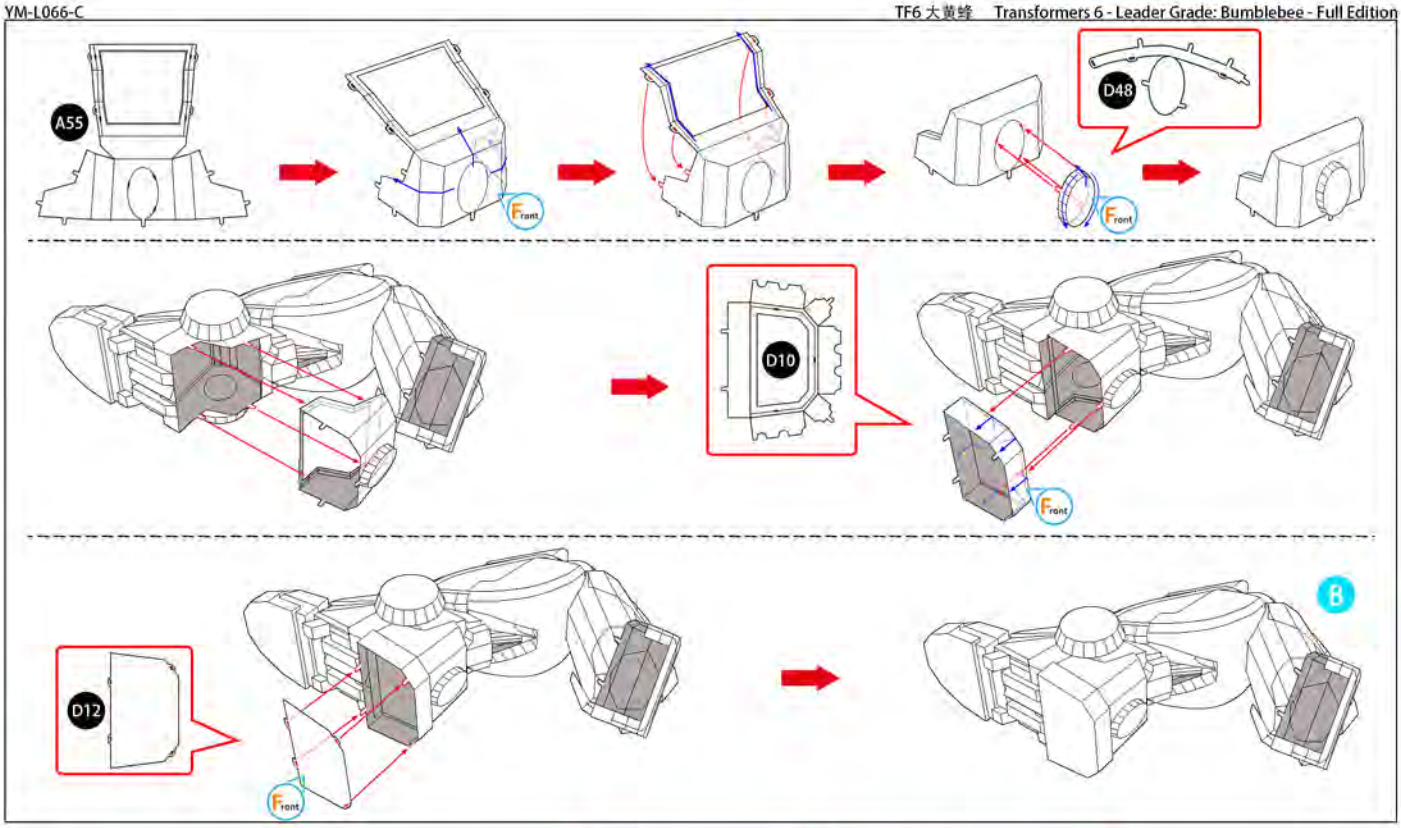
A55
Front
D48
Front
D10
Front
D12
Front
B

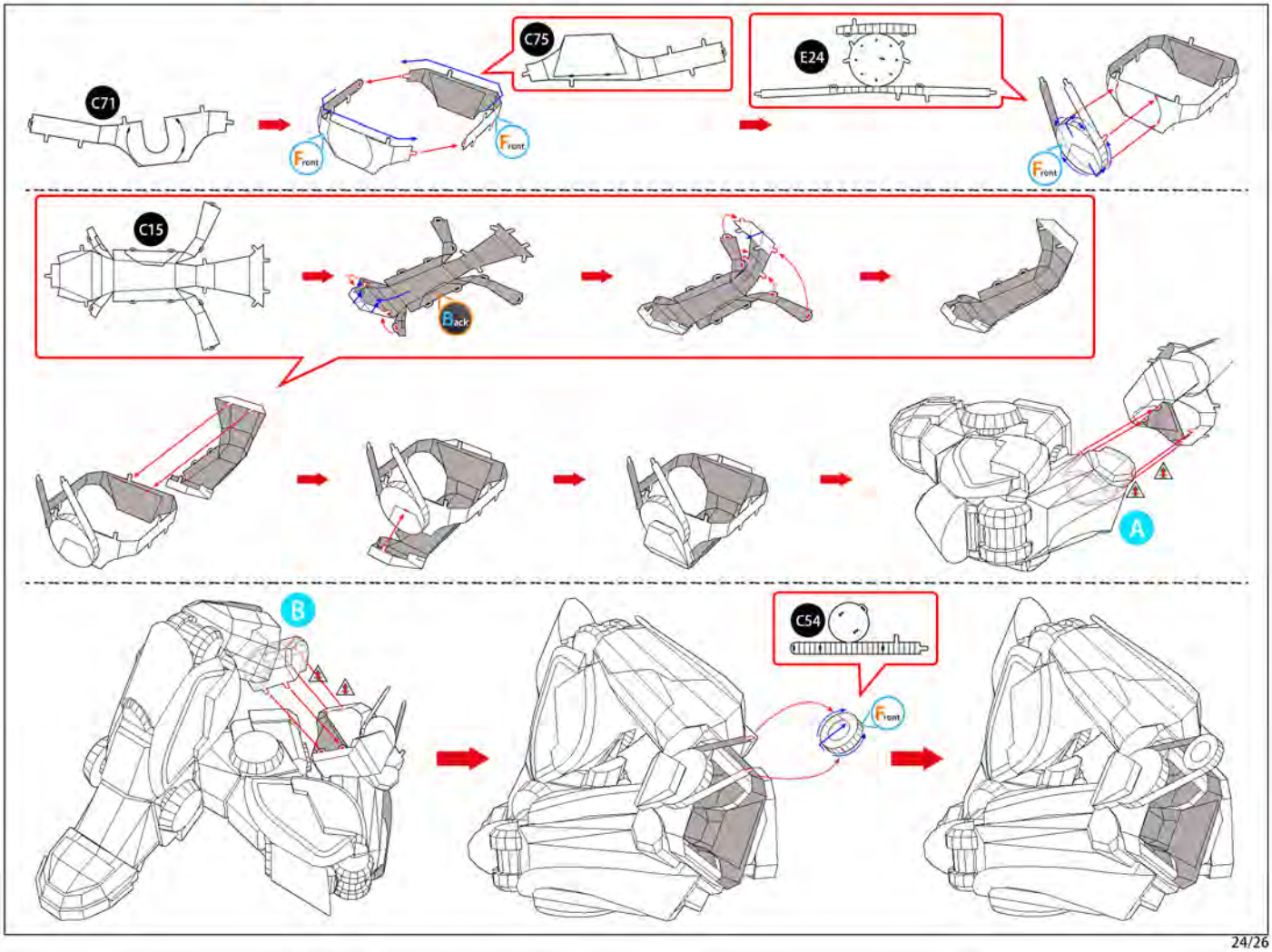
C71
Front
Front
C75
E24
Front
C15
Back
A
B
C54
Front

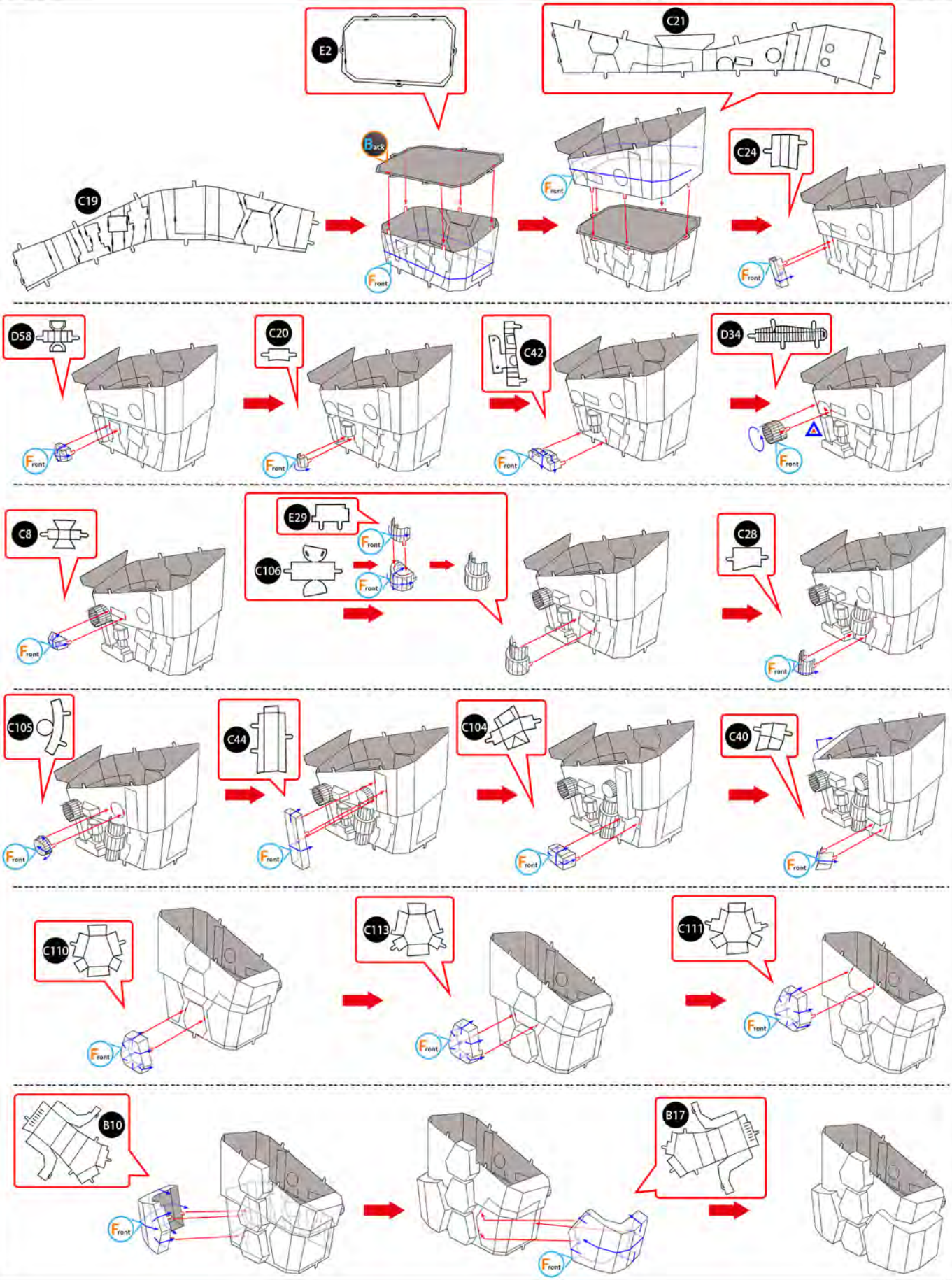
E2
C21
Back
C19
Front
C24
D58
C20
C42
D34
C8
E29
C106
C28
C105
C44
C104
C40
C110
C113
C111
B10
B17

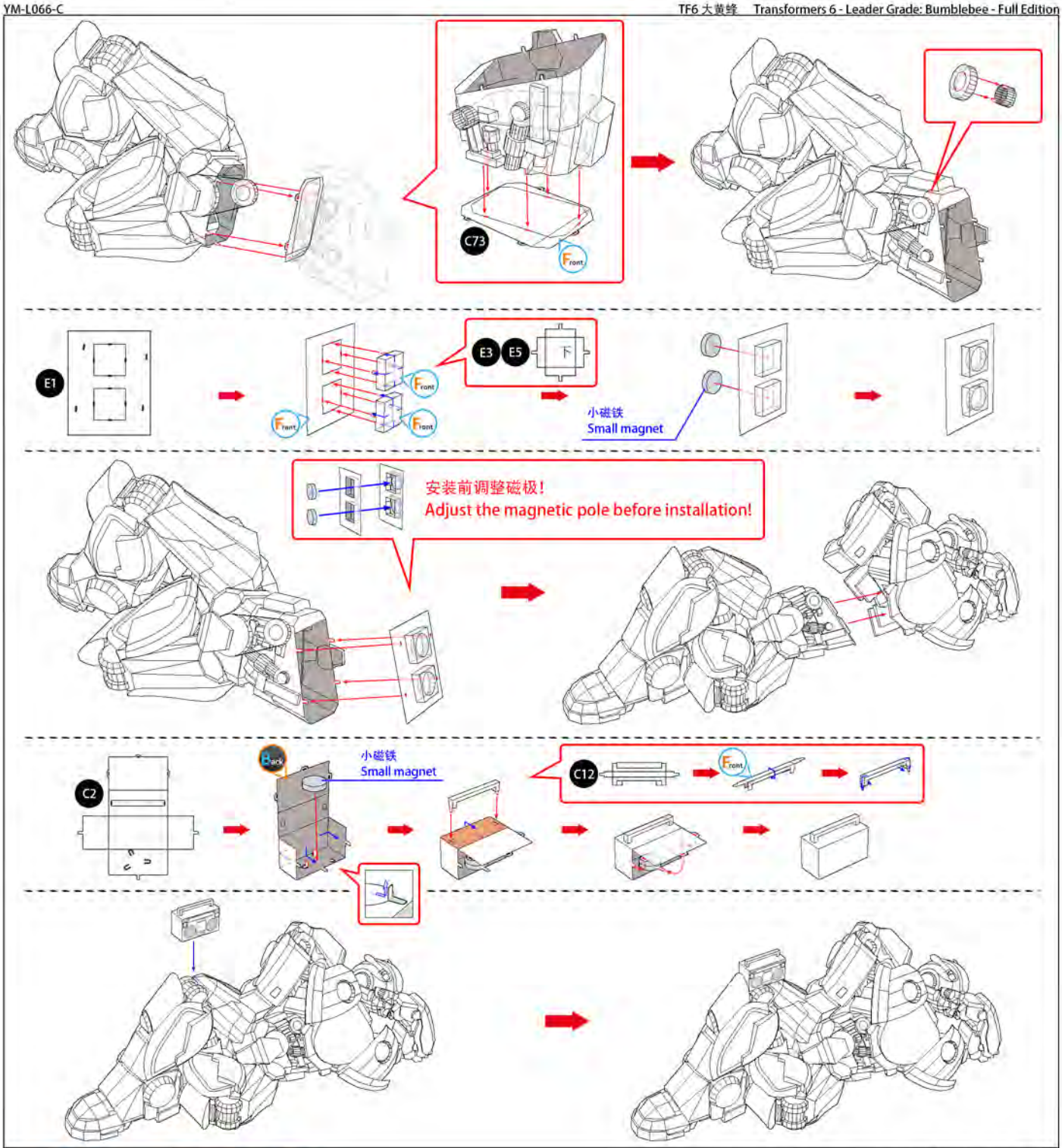


上海艺模电子科技有限公司
SHANGHAI ART MODEL ELECTRONIC SCIENCE AND TECHNOLOGY CO.,LTD
电话/Tel: 021-58942999
网址/Website: WWW.MUMODEL.COM
产地/Address: 上海浦东新区川周公路5917弄1号

Design by: Kanade Remember 昔日永恒

扫码加入微信公众号
解锁更多模型
Scan the two-dimensional code
Join us and unlock more models

Licensed By:

HASBRO and its logo and TRANSFORMERS,the logo and all related characters are trademarks of Hasbro and used with permission.
© 2018 Hasbro.All Rights Reserved.