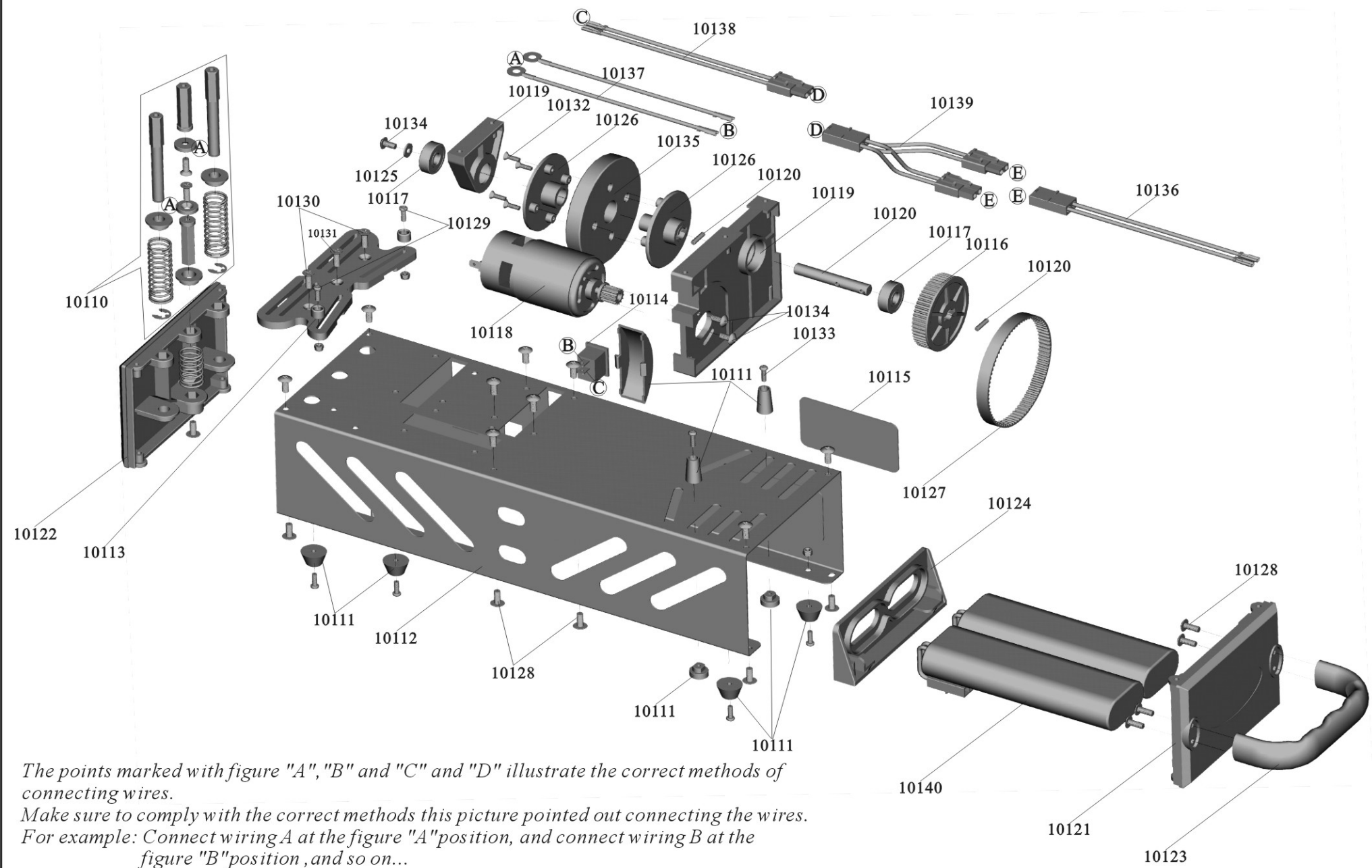

The points marked with figure "A", "B" and "C" and "D" illustrate the correct methods of connecting wires.
Make sure to comply with the correct methods this picture pointed out connecting the wires.
For example: Connect wiring A at the figure "A" position, and connect wiring B at the figure "B" position , and so on...

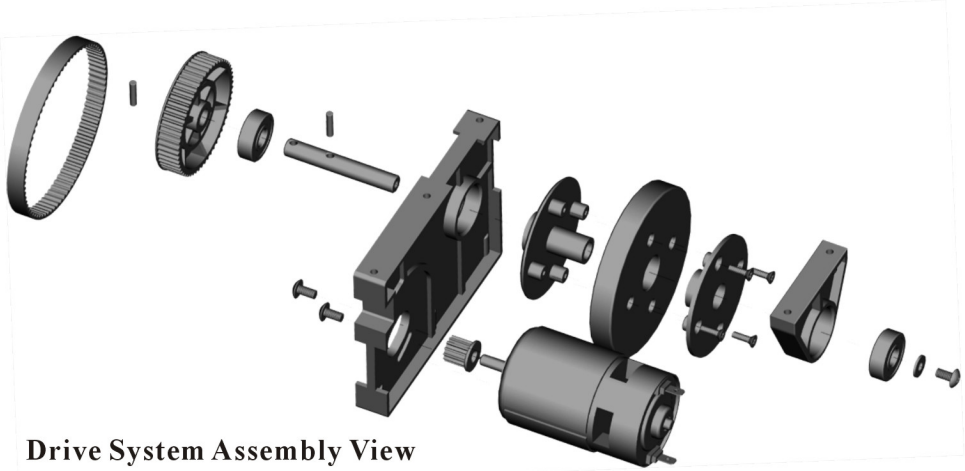

Drive System Assembly View

Part List-1

10110 **10110A-Spring Holder A** **10110B-Spring Holder B** **10110C-Pressure Plate Post** **10110D-Supporter** **10110E-Copper Bushing** **10110F- E-clip** **10110G-Spring A** **10110H-Spring B** A B C D E F G H	10111 **10111A-Botton Foot** **10111B-Wheel Shield Hood** **10111C-Hold Post A** **10111D-Hold Post B** A B C D
10112-Shell	10113-Pressure Plate
10114-Power Switch	10115-Magnet
10116-Sub-Drive Wheel	10117-Rolling Bearing 22*8*7
10118-Motor	10119-Motor Mount

Part List-2

10120-Sub-Drive Wheel Shaft/Pins	10121-Right Side Plate	10122-Left Side Plate	10123-Handle
10124-Battery Plate	10125-Washer	10126-Drive Wheel Mount A/B	10127-Drive Belt
10128-Cap Head Tapping Screw M4*10	10129-Button-head Cap Mechanical Screw M3*9	10130-Flat Head Mechanical Screw M4*10	10131-Flat Head tapping Screw M4*10
10132-Flat Head Mechanical Screw M3*10	10133-Button-head Cap tapping Screw M3*10	10134-Cap Head Mechanical Screw M4*8	10135-Drive Wheel
10136-Wiring A	10137-Wiring B	10138-Wiring C	10139-Wiring D
10140-Battery Pack	10141-Accumulator		

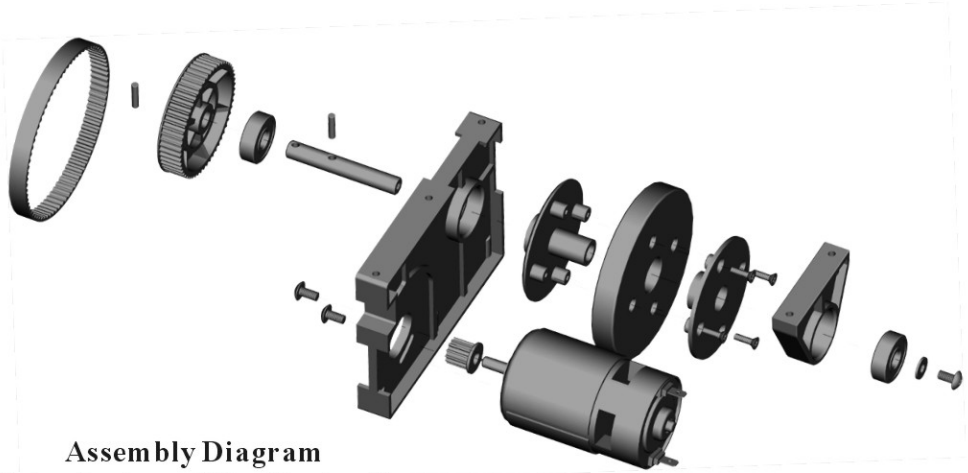

Assembly Diagram
Drive System of the Starter Box

Part List

10110

10110A-Spring Holder A
10110B-Spring Holder B
10110C-Pressure Plate Post
10110D-Supporter
10110E-Copper Bushing
10110F- E-clip
10110G-Spring A
10110H-Spring B

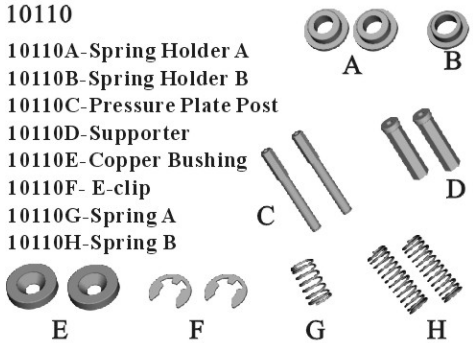

10111

10111A-Feet on the bottom
10111B-Wheel Shield Hood
10111C-Hold Post A
10111D-Hold Post B

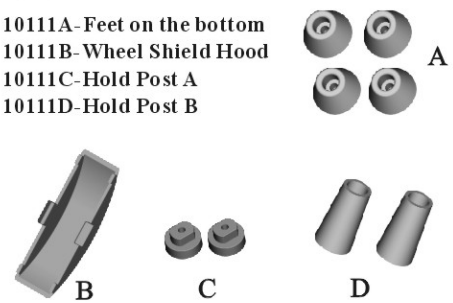

10112-Shell

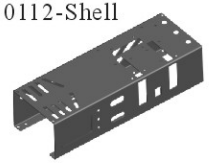

10113-Pressure Plate

10114-Power Switch

10115-Magnet

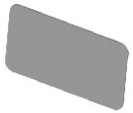

10116-Sub-Drive Wheel

10117-Rolling Bearing 22*8*7

10118-Motor

10119-Motor Mount

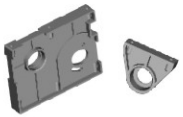

Part List

10120-Sub-Drive Wheel Shaft/Pins

10121-Right Side Plate

10122-Left Side Plate

10123-Handle

10124-Battery Plate

10125-Washer

10126-Assembly Pad A/B

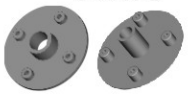

10127-Belt

10128-Cap Head Tapping Screw M4*10

10129-Button-head Cap Mechanical Screw M3*9

10130-Flat Head Mechanical Screw M4*10

10131-Flat Head tapping Screw M4*10

10132-Flat Head Mechanical Screw M3*10

10133-Button-head Cap tapping Screw M3*10

10134-Cap Head Mechanical Screw M4*8

10135-Drive Wheel

10136-Wiring A

10137-Wiring B

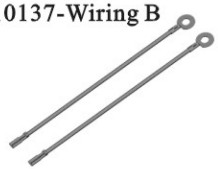

10138-Wiring C

10139-Wiring D

10140-Battery
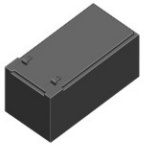
10141-Accumulator